Problem Definition: Loss of the Mossville to Alfol 69 kV line 213 results in the parallel 69 kV Mossville to Alfol Line 253 to exceed its thermal rating. An operating guide will be utilized until a third 69 kV line is constructed between Mossville and Alfol.

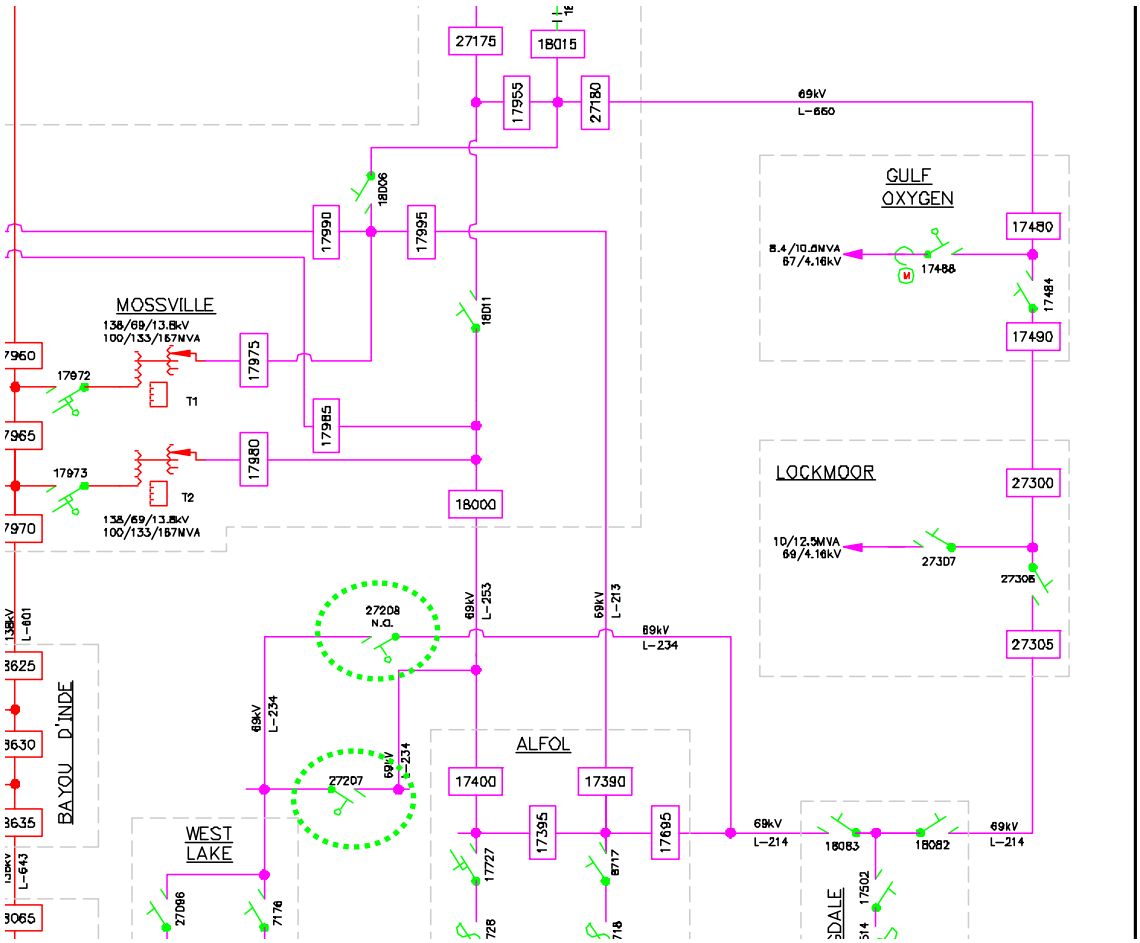

Figure 1: 69 kV Transmission System in the Alfol area

- **Remedial Steps:**

  Step 1: Close normally open motor operated 69 kV switch 27208.
  Step 2: Open normally closed motor operated 69 kV switch 27207.