POWER SYSTEMS CONSULTING

STABILITY STUDY FOR PROJECT E002 (15 MW UPRATE ON BIG CAJUN 2, UNIT #2)

DRAFT REPORT Rev 1

REPORT NO.: 2013-E12094-R0
Issued: December 5, 2013

Prepared for:
Midcontinent ISO

Prepared by:
ABB Power Systems Consulting
940 Main Campus Drive, Suite 300
Raleigh, NC 27606

12 Cornell Road
Latham, NY 12110

Legal Notice

ABB Inc. – Power Systems Consulting

Technical Report

Midcontinent ISO	**Report No.** 2013-E12094-R0	
Stability Study for Project E002	12/05/2013	# Pages 21

Principal Contributors:	**Reviewed by:**	**Approved by:**
Ashish Jain Sheng Yang	Srinivas Pillutla Seshadri Subramanian	Willie Wong

Executive Summary

Midcontinent ISO commissioned ABB Power Systems Consulting to perform a stability study for Project E002, which is a proposed 15 MW power uprate of Big Cajun 2, Unit #2. The power uprate will be achieved by converting Unit #2 from coal-fired, as is presently the case, to gas-fired generation. This conversion is expected "free up" about 15 MW of auxiliary load on Unit #2 which in turn is expected to increase its net power output by 15 MW. The conversion does not involve any changes to the turbine-governor, generator, excitation system and power system stabilizer on Unit #2. The expected completion date for the proposed conversion is in the 2014 summer timeframe.

The objective of this study is to evaluate system stability performance after the proposed 15 MW increase in net power output. The evaluation was performed on the basis of critical clearing time (CCT) simulations – the intent here is to compare critical clearing times against typical 500 kV fault clearing times to see whether there is adequate stability margin in the system after the conversion.

For the purposes of this study, three-phase faults with normal clearing and with consideration of breaker failure[1] were simulated at a limited number of 500 kV buses (Big Cajun 2, Fancy Point, and Webre). For normally cleared faults, CCTs were established at the normal clearing time. For breaker failure faults, the primary clearing times were fixed and the CCTs were established at backup clearing. Entergy planning criteria were used to gauge stability performance. Critical clearing times were calculated first on the basis of angular stability criteria and then on the basis of voltage dip criteria.

Table 1 summarizes the results of the analysis. The following observations are made:

- Critical clearing times derived on the basis of angular stability criteria show adequate margin to instability. CCTs were found to be well above typical clearing times for normally cleared faults[2] and stuck-breaker faults[3].

[1] It should be noted that all 500 kV breakers in the Entergy system are independent pole operated (IPO) breakers. For breaker failure simulations, it is assumed that the failure occurs on only one of the three phases (poles). In other words, two poles of the breaker open normally but the third pole fails to operate. Thus, the three-phase fault is seen by the system as a single-phase fault after the normal clearing time.

[2] Normal clearing times for 500 kV faults in the Entergy system are typically 5 cycles.

[3] Backup clearing times for 500 kV stuck-breaker faults in the Entergy system are typically 9 cycles after primary clearing. i.e., total fault clearing time for 500 kV stuck-breaker faults is typically 5+9=14 cycles.

- According to Entergy planning procedures, voltage dip criteria are not applicable for three-phase stuck-breaker faults. See reference [1]. However for the purposes of this study, the transient voltage response of such faults were compared against the least stringent voltage dip criteria where voltage dip is not to exceed 30% at any bus and the CCTs were computed on this basis. CCTs derived on this basis are more limiting than those derived on the basis of angular stability criteria.

- For three-phase normally cleared faults (fault cases #1 to #3 in Table 1), the CCTs were found to well above typical fault clearing times for normally cleared 500 kV faults, thus indicating adequate margin to instability. For example, fault case #1 exhibited a CCT of 7 cycles based on voltage dip criteria. Clearing the fault after 7 cycles resulted in voltage dip violations at Big Cajun 2 500 kV bus.

- For three-phase stuck-breaker IPO faults (fault cases #4A to #8A in Table 1), the primary clearing time was fixed at 5 cycles and CCTs were established at backup clearing. Fault cases #4A and #5A exhibited critical clearing times that were lower than typical 500 kV backup clearing times. For these faults, extending the backup clearing times beyond their respective CCTs resulted in voltage dip violations at Big Cajun 2 500 kV bus. These however are not a concern because voltage dip criteria are not applicable for three-phase stuck-breaker faults, as noted above. Fault cases #4A and #5A were repeated on a pre-project case i.e., case without the 15 MW power uprate. The backup clearing times to avoid unacceptable transient voltage dip were found to be same as those determined from the case with project E002. These results imply that project E002 does not adversely impact system stability. CCTs for fault cases #6A through #8A indicate adequate margin to stability.

- Fault cases #4A to #6A were repeated, this time as single-line-to-ground stuck-breaker faults (instead of three-phase stuck-breaker IPO faults). CCTs for these faults are well above typical backup fault clearing times of 9 cycles, thus suggesting adequate margin to stability.

Based on the results of stability analysis it can be concluded that proposed E002 project does not adversely impact the stability of the Entergy system.

The results of this analysis are based on available data and assumptions made at the time of conducting this study. If any of the data and/or assumptions made in developing the study model change, the results provided in this report may not apply.

Table 1: Results of Stability Analysis

Fault Case	Fault Location	Fault Type	Critical Clearing Time (Cy)		Fault Clearing Time (Cy)						Limiter
			Angular Stability		Transient Voltage				Fault Type: SLG		
			Post Project		Post Project		Pre-Project		Post Project		
#			Primary	Back-up	Primary	Back-up	Primary	Back-up	Primary	Back-up	
1	Big Cajun 2 - Webre 500 kV	3PH	**9**	None	**7**	None	N/A	N/A	N/A	N/A	Big Cajun 2 500 kV transient voltage dip exceeds 30% for 8cy clearing time
2	Big Cajun 2 - Fancy Pt. 500 kV	3PH	**9**	None	**8**	None	N/A	N/A	N/A	N/A	Big Cajun 2 500 kV transient voltage dip exceeds 30% for 9cy clearing time
3	Fancy Point - Big Cajun 2 500 kV	3PH	**9**	None	**8**	None	N/A	N/A	N/A	N/A	Big Cajun 2 500 kV transient voltage dip exceeds 30% for 9cy clearing time
4A	Big Cajun 2 - Webre 500 kV	3PH-STK	5	**12**	5	**8**	5	**8**	5	**12**	Big Cajun 2 500 kV transient voltage dip exceeds 30% for 9cy backup clearing time
5A	Big Cajun 2 - Fancy Point 500 kV	3PH-STK	5	**11**	5	**7**	5	**7**	5	**11**	Big Cajun 2 500 kV transient voltage dip exceeds 30% for 8cy backup clearing time
6A	Big Cajun 2 - Fancy Point 500 kV	3PH-STK	5	**13**	5	**9**	5	**9**	5	**13**	Big Cajun 2 500 kV transient voltage dip exceeds 30% for 10cy backup clearing time
7A	Fancy Point 500/230 kV Auto	3PH-STK	5	**60**	5	**60**	N/A	N/A	N/A	N/A	-
8A	Webre - Wells 500 kV	3PH-STK	5	**60**	5	**60**	N/A	N/A	N/A	N/A	-

1. **Bold Green Clearing Time** = Critical clearing time more than typical fault clearing times (5 cycles for primary clearing; 9 cycles for backup clearing).

2. **Red Bold Clearing Time** = Critical clearing time less than typical fault clearing times (5 cycles for primary clearing; 9 cycles for backup clearing).

3. All 500 kV breakers are IPO breakers. For simulation of three-phase stuck-breaker faults, the three-phase fault is converted to a single-line-to-ground fault at normal clearing time.

4. N/A: Not simulated

Report Revision History

Rev #	Description	Date	Principal Contributors	Reviewed by	Approved by
0	Draft Report	12/05/2013	A. Jain S. Yang	S. Pillutla S. Subramanian	W. Wong
DISTRIBUTION: Midcontinent ISO Entergy					

TABLE OF CONTENTS

1 INTRODUCTION

Midcontinent ISO commissioned ABB Power Systems Consulting to perform a stability study for Project E002, which is a proposed 15 MW power uprate of Big Cajun 2, Unit #2.

1.1 Background

The Big Cajun 2 power plant comprises three steam turbine-generators. Based on the available information, Unit #2 is earmarked for conversion from coal-fired, as is presently the case, to gas-fired generation. This conversion is expected "free up" about 15 MW of auxiliary load on Unit #2 which in turn is expected to increase its net power output by 15 MW. The conversion does not involve any changes to the turbine-governor, generator, excitation system and power system stabilizer on Unit #2.

Project E002 is defined as an interconnection request for the proposed 15 MW increase in net power output on Big Cajun 2, Unit #2. The proposed conversion is expected to be completed in the 2014 summer timeframe.

The objective of this study is to evaluate system stability performance after the proposed 15 MW increase in net power output. The evaluation was performed on the basis of critical clearing time (CCT) simulations – the intent here is to compare critical clearing times against typical 500 kV fault clearing times to see whether there is adequate margin in the system. If the CCTs are deemed unacceptable, simulations will be repeated without project E002. This will help determine whether the CCTs are acceptable prior to the proposed interconnection and whether project E002 has impacted the CCTs.

Figure 1-1 shows the geographic location of Big Cajun II Power Plant.

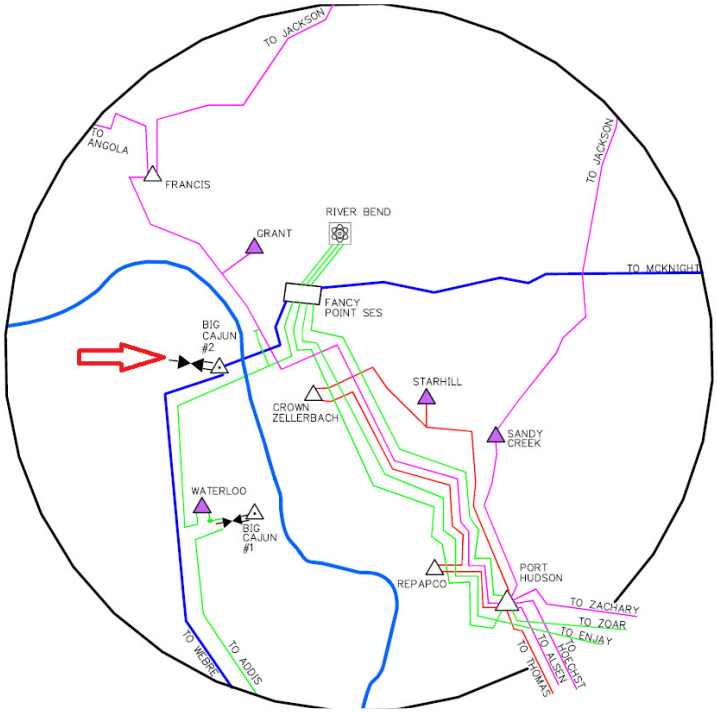

Figure 1-1: Big Cajun II Power Plant Vicinity

1.2 Project Description

The subject generator is located in the Entergy service territory. The following list summarizes the subject generator location and other study details:

Location:

Big Cajun 2 Power Plant

Machine Data:

General:

Pre Project:
Unit 1: 626 MW (gross), 593 MW (net); Aux. load: 33 MW
Unit 2: 617 MW (gross), 575 MW (net); Aux. load: 42 MW
Unit 3: 619 MW (gross), 588 MW (net); Aux. load: 31 MW

Post Project:
Unit 1: 626 MW (gross), 593 MW (net); Aux. load: 33 MW
Unit 2: 617 MW (gross), 590 MW (net); Aux. load: 27 MW ← E002
Unit 3: 619 MW (gross), 588 MW (net); Aux. load: 31 MW

Plant Specifications:

Type of Machine: Steam-Turbine Generator
Number of Machines: Three (3)
Rated voltage: 24.0 kV
Big Cajun 2, Unit 1 MVA: 731.0 MVA
Big Cajun 2, Unit 2 MVA: 695.0 MVA
Big Cajun 2, Unit 3 MVA: 688.0 MVA

Simulation Models:

Generator Model: GENROU
Excitation System Model: AC7B
Power System Stabilizer Model: PSS2A

2 STABILITY ANALYSIS

2.1 Stability Analysis Assumptions, Methodology, and Criteria

Stability analysis was performed using Siemens-PTI's PSS/E™ dynamics program V32. Three-phase faults with normal clearing and with consideration of breaker failure were simulated at a limited number of 500 kV buses (Big Cajun 2, Fancy Point, and Webre). It should be noted that all 500 kV breakers in the Entergy system are independent pole operated (IPO) breakers. For breaker failure simulations, it is assumed that the failure occurs on only one of the three phases (poles). In other words, two poles of the breaker open normally but the third pole fails to operate. Thus, the three-phase fault is seen by the system as a single-phase fault after the normal clearing time.

As noted previously, the purpose of the stability simulations is to determine critical clearing times (CCTs) for three-phase normally cleared faults and for three-phase stuck-breaker faults (assuming IPO operation). Critical clearing times are compared against actual fault clearing times to see whether there is adequate margin in the system.

Normally cleared three-phase faults were simulated in PSS/E as follows:

1. Run the stability simulation for 0.1 sec (no disturbance simulation).
2. Apply a 3-phase fault at t=0.1 sec.
3. Clear the fault at the normal clearing time of 5 cycles[4] by tripping the faulted facility and run the simulation until 10 seconds.
4. If system response is acceptable in the previous step, repeat Step 3 by increasing the fault clearing time (by tripping the faulted facility) until there is a stability criteria violation. The CCT is then determined as the fault clearing time above which there is a stability criteria violation. Compare the CCT with the typical normal clearing time (5 cycles for 500 kV buses).

Three-phase stuck-breaker IPO faults were simulated in PSS/E as follows:

1. Run the stability simulation for 0.1 sec.
2. Apply a 3-phase fault at t=0.1 sec.
3. At the normal clearing time, open the breakers at the remote end of the faulted line (5 cycles). Trip the faulted facility.
4. Apply a single-line-to-ground fault at the same location (assumes the breaker is equipped with independent pole tripping).
5. Run the simulation for another 9 cycles[5] until the fault is cleared by backup protection (trip the relevant second facility, as necessary) and run the simulation until 10 seconds.
6. If system response is acceptable in the previous step, repeat Step 5 by increasing the backup clearing time (trip the relevant, second facility) until there is a stability criteria violation. The CCT is then determined as the fault clearing time above which there is a stability criteria violation. Compare the CCT with the typical backup clearing time (9 cycles for 500 kV buses).

[4] Normal clearing times for 500 kV faults in the Entergy system are typically 5 cycles.

[5] Backup clearing times for 500 kV stuck-breaker faults in the Entergy system are typically 9 cycles after primary clearing. i.e., total fault clearing time for 500 kV stuck-breaker faults is typically 5+9=14 cycles.

Study criteria are based on Section 7.8 of "Entergy Transmission Local Planning Criteria" [1]. The criteria specified in the document are shown below for reference:

- Generator Instability:
  - If the generator rotor angle deviation with respect to a "distant" generator is more than 180 degrees, the generator will slip poles. This condition is unacceptable as it imparts a big shock to the generator shaft and may reduce its life span. Any deviation of rotor angle beyond 180 degrees is considered instability of the generator. It needs to be evaluated whether the instability is limited to a specific generator or sets of generators or an entire region becomes unstable.
- Voltage Dip:
  - 3-phase fault or single-line-ground fault with normal clearing resulting in the loss of a single component (generator, transmission circuit or transformer) or a loss of a single component without fault:
    - Not to exceed 20% for more than 20 cycles at any bus
    - Not to exceed 25% at any load bus
    - Not to exceed 30% at any non-load bus
  - 3-phase faults with normal clearing resulting in the loss of two or more components (generator, transmission circuit or transformer), and SLG fault with delayed clearing resulting in the loss of one or more components:
    - Not to exceed 20% for more than 40 cycles at any bus
    - Not to exceed 30% at any bus
  - The duration of the transient voltage dip excludes the duration of the fault. The transient voltage dip criteria may not be applied to three-phase faults followed by stuck-breaker conditions unless the determined impact is extremely widespread.

For each fault, synchronous machine rotor angles were monitored to check whether synchronism is maintained following the fault. In addition, voltages were monitored on selected buses (project vicinity) to check for voltage criteria violations. For each fault, the system is monitored for transient instability, voltage dip magnitude and duration, and damping of oscillations, if any.

Voltage dip monitoring is initiated two cycles following fault clearing (i.e., voltage dip criteria is not monitored for the duration of the fault). For the purposes of determining the voltage limits during three-phase and single-line-ground faults with normal clearing, a load bus is defined as any bus with one or more directly connected loads in the Entergy system. Conversely, any bus without a directly connected load is defined as a non-load bus.

As there are no specific voltage dip criteria for three-phase stuck-breaker faults, the transient voltage response of these faults were compared against the least stringent voltage dip criteria where voltage dip is not to exceed 30% at any bus.

2.2 *Study Models*

The study model consists of power flow case and dynamics database as described below:

Power Flow Case

A power flow case "EN15S12_U3a_CP_final_unconv.sav" representing 2015 summer peak load post "project" conditions was provided by Entergy. A review of local area generation levels shows that Big Cajun 2 and nearby generating units at Riverbend Nuclear Station and Big Cajun 1 are dispatched at maximum.

MISO and Entergy requested that the power factors of the auxiliary loads on the Big Cajun 2 generators be adjusted as follows:

Big Cajun 2, Unit #1: 0.827 lagging
Big Cajun 2, Unit #2: 0.830 lagging
Big Cajun 2, Unit #3: 0.776 lagging

The pre-project and post-project powerflow cases were updated based on the above information.

Figure 2-1 and Figure 2-2 show the PSS/E one-line diagrams for the local area without and with the E002 project, respectively.

Stability Database

PSS/E basecase stability files were provided by Entergy. Specifically, the dynamic data was included in dyre file "2018SUM_REDUCED.dyr".

The PSS/E power flow and stability data for Big Cajun 2, Unit 2 are provided in Appendix A.

In addition to the above data, an ASPEN short-circuit case (Ent_plan_2013-08-15.olr) was provided by Entergy to facilitate calculation of positive sequence equivalent fault admittances needed to simulate SLG faults in PSS/E.

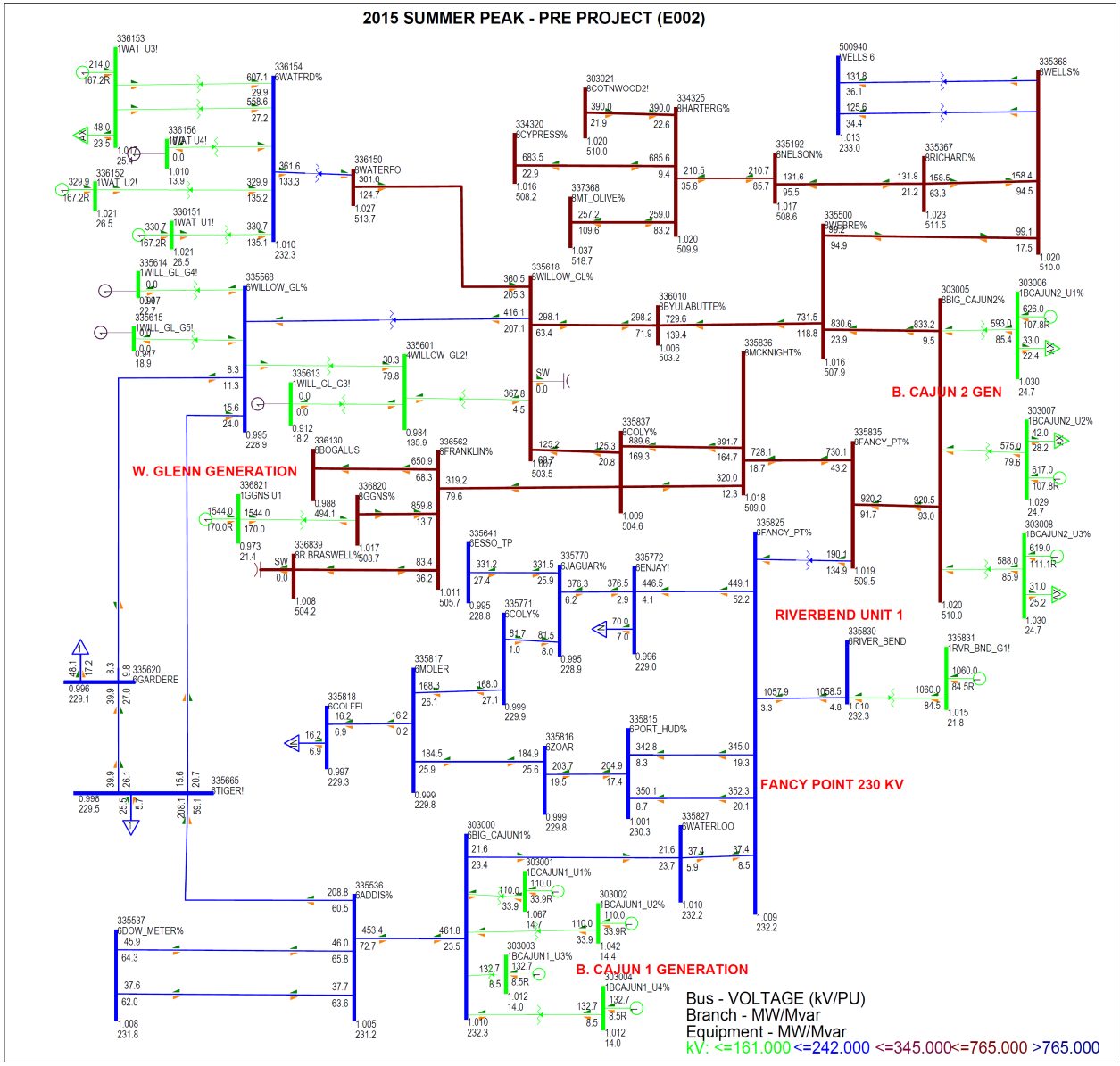

Figure 2-1: 2015 Summer Peak Flows and Voltages without E002

ABB

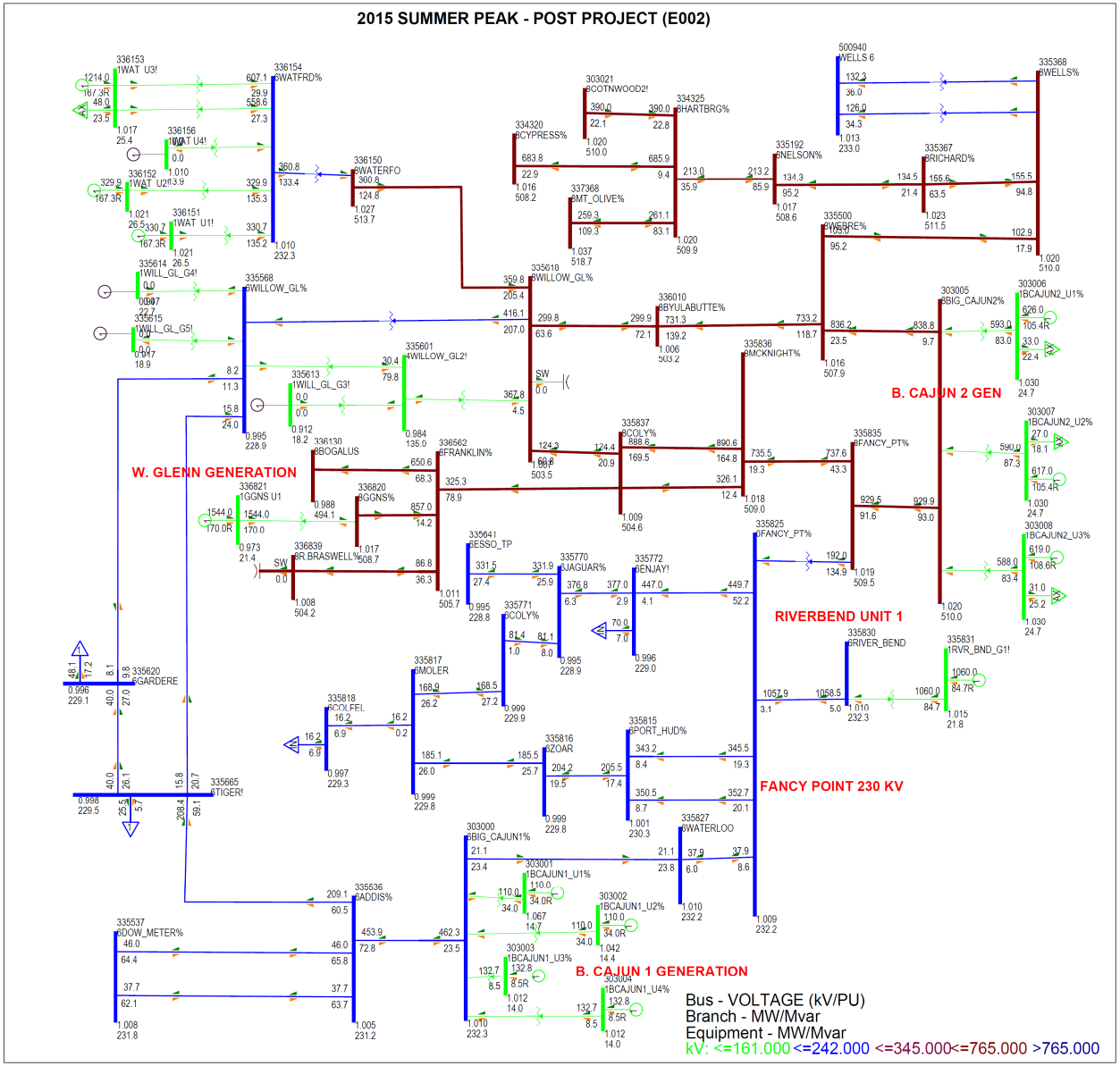

Figure 2-2: 2015 Summer Peak Flows and Voltages with E002

ABB

2.3 Transient Stability Analysis

2.3.1 Fault Definitions & Procedures

The list of faults used to determine critical clearing times are provided in Table 2-2. Breaker diagrams for the Big Cajun 2 500 kV, Fancy Point 500 kV and Webre 500 kV substations are shown in Figure 2-3 to Figure 2-5.

REST OF THIS PAGE INTENTIONALLY LEFT BLANK

Table 2-1: Fault List for Stability Simulations

Fault Case	Fault Location	Fault Type	Critical Clearing Time (Cy)		Stuck	Primary		Secondary	
#			Primary	Back-up	Breaker#	Breaker Trip #	Element	Breaker Trip #	Element
1	Big Cajun 2 - Webre 500 kV	3PH	TBD	None	None	Big Cajun 2 Brk# 20550,20555 Webre Brk# 20580, 20565	Big Cajun 2 - Webre 500 kV	None	
2	Big Cajun 2 - Fancy Pt. 500 kV	3PH	TBD	None	None	Big Cajun 2 Brk# 20535,20540 Fancy Point Brk# 20770, 20775	Big Cajun 2 - Fancy Point 500 kV	None	
3	Fancy Point - Big Cajun 2 500 kV	3PH	TBD	None	None	Fancy Point Brk#20770, 20775 Big Cajun 2 Brk# 20535,20540	Fancy Point - Big Cajun 2 500 kV	None	
4A	Big Cajun 2 - Webre 500 kV	3PH-STK	5	TBD	Brk #20550	Big Cajun 2 Brk# 20555 Webre Brk# 20580, 20565	Big Cajun 2 - Webre 500 kV	Big Cajun 2 Brk# 20535, 20570	None
5A	Big Cajun 2 - Fancy Point 500 kV	3PH-STK	5	TBD	Brk #20535	Big Cajun 2 Brk# 20540 Fancy Point Brk# 20770, 20775	Big Cajun 2 - Fancy Point 500 kV	Big Cajun 2 Brk# 20570,20550	None
6A	Big Cajun 2 - Fancy Point 500 kV	3PH-STK	5	TBD	Brk #20540	Big Cajun 2 Brk# 20535 Fancy Point Brk# 20770, 20775	Big Cajun 2 - Fancy Point 500 kV	Big Cajun 2 Brk# 20545	Gen #1 Trip
7A	Fancy Point 500/230 kV Auto	3PH-STK	5	TBD	Brk #20770	Fancy Point Brk# 20765	Fancy Pt. 500/230 kV auto	Fancy Point Brk# 20775	Fancy Pt. - McKnight 500 kV (TBD) Fancy Pt. - Big Cajun 2 500 kV (TBD)
8A	Webre - Wells 500 kV	3PH-STK	5	TBD	Brk #20580	Webre Brk# 20585 Wells #13730,13735	Webre - Wells 500 kV	Webre Brk# 20565	Webre - Big Cajun 2 500 kV (TBD) Webre - Bayou Butte 500 kV (TBD)

TBD = Critical clearing time to be determined through simulations.

Total fault clearing time is the sum of primary clearing and backup clearing times.

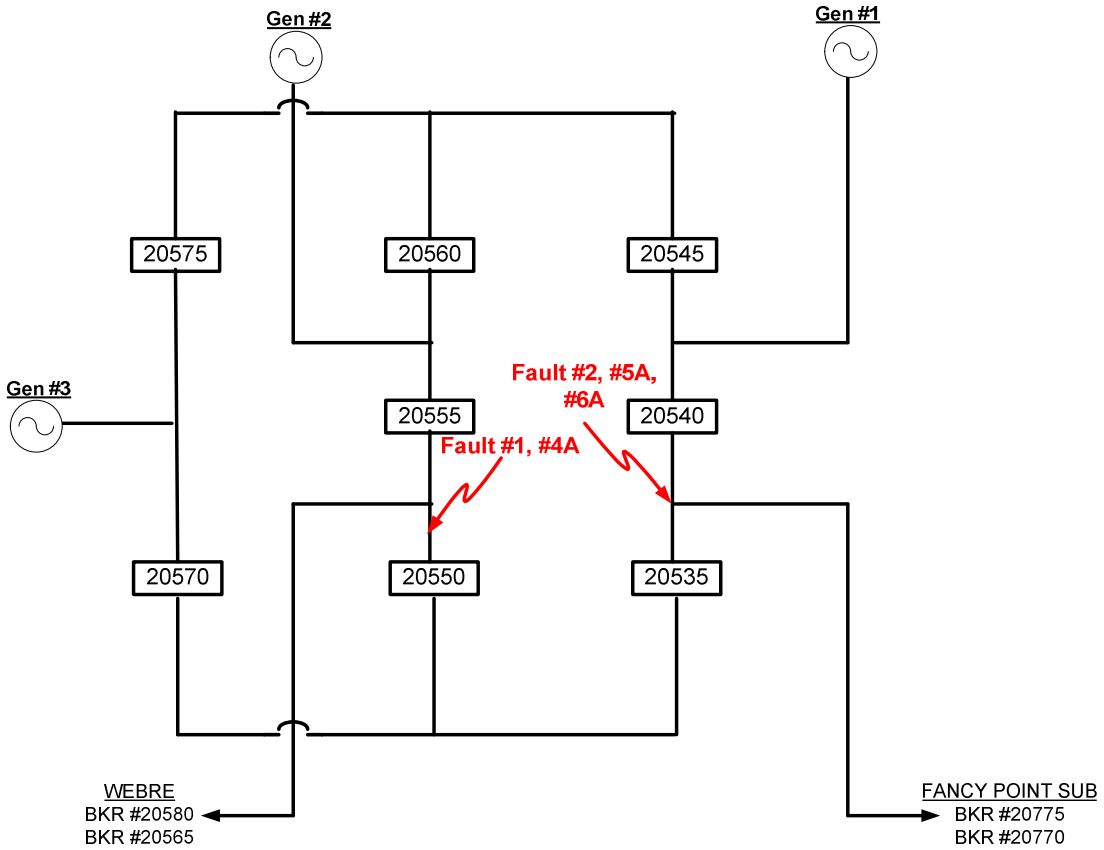

Figure 2-3: Layout Diagram for Big Cajun 2 500 kV Substation

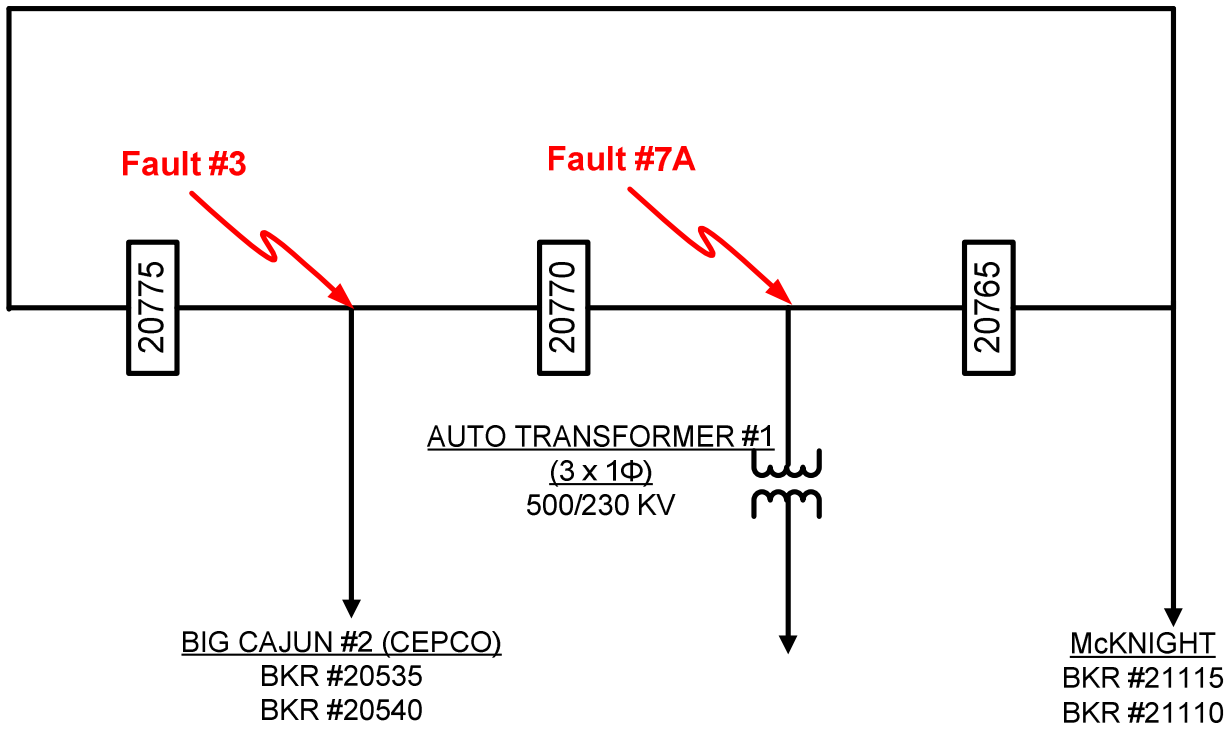

Figure 2-4: Layout Diagram for Fancy Point 500 KV Substation

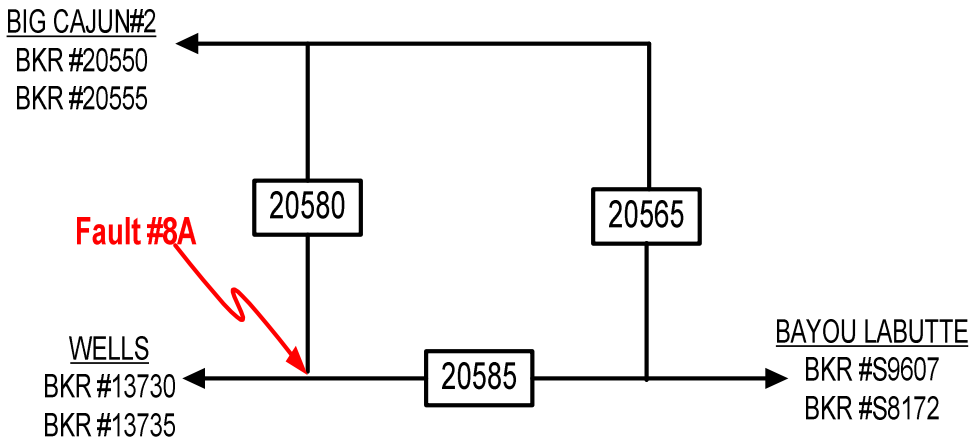

Figure 2-5: Layout Diagram for Webre 500 kV Substation

2.4 Critical Clearing Time Evaluation

Critical clearing times were calculated first on the basis of angular stability criteria and then on the basis of voltage dip criteria.

Angular Stability

An evaluation of the critical clearing times was carried out for fault cases at Big Cajun 2 and the Fancy Point and Webre 500 kV substations. Such an evaluation can be used to determine the margin to instability.

Fault Cases #1 and #2 represent, respectively 3-phase faults on the 500 kV lines from Big Cajun 2 to Webre and to the Fancy Point 500 kV substation (faults are applied at the Big Cajun 2 end). The primary fault clearing time is increased until the Big Cajun 2 or nearby generators exhibited first swing instability (out-of-step condition). As shown in Figure 2-6, for a 3-phase fault on Big Cajun 2 - Webre 500 kV line, the Big Cajun 2 generators were found to be stable until the fault is cleared in 9 cycles; however, any further increase in the fault duration result in the Big Cajun 2 generators becoming out-of-step with rest of the system.

REST OF THIS PAGE INTENTIONALLY LEFT BLANK

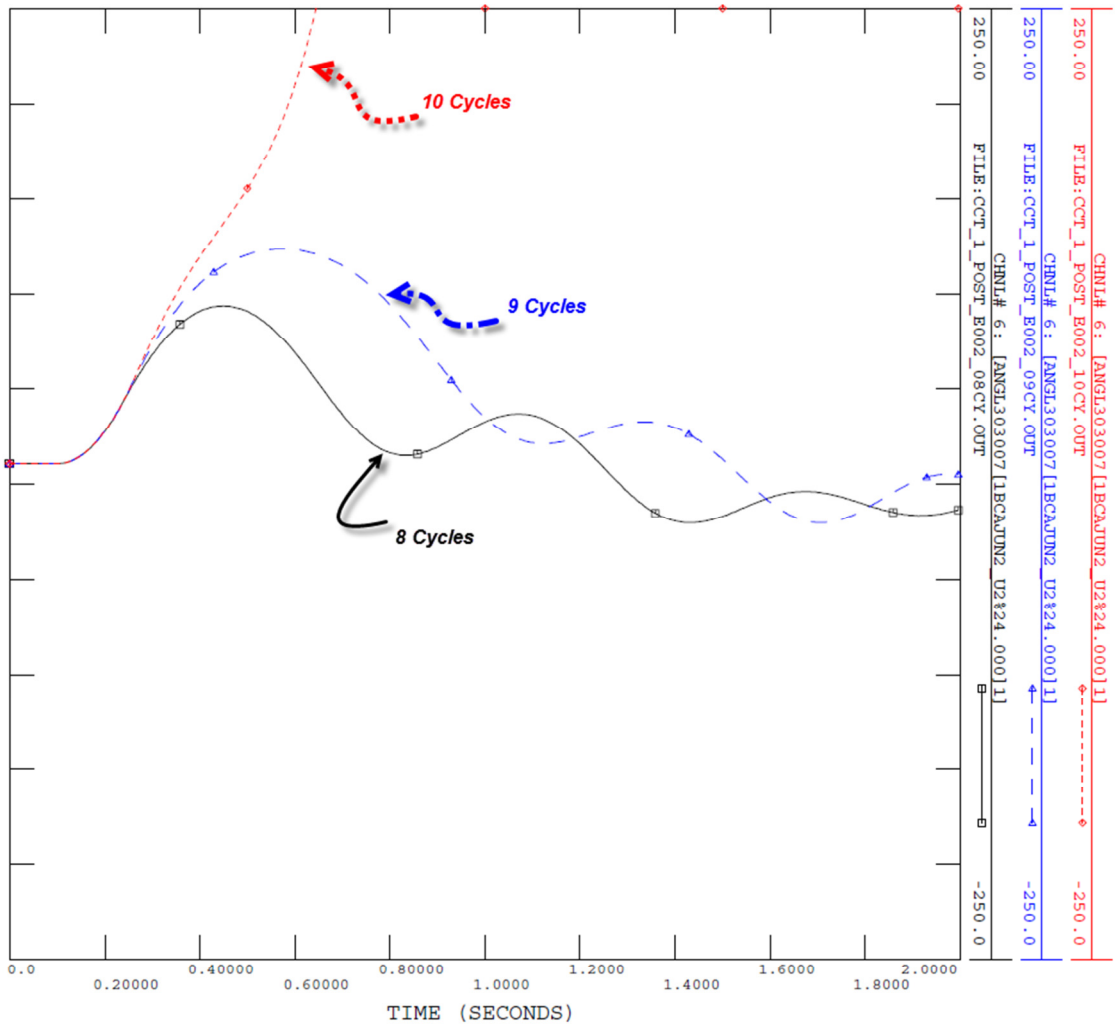

Figure 2-6: Critical Clearing Time for Fault Case #1

Similarly, critical clearing time was determined for fault cases #2 and #3. The critical clearing times thus determined from simulations were found to exceed the assumed typical fault clearing times for 500 kV faults (~ 5 cycles), thus indicating adequate margin to instability.

For the next set of simulations (fault cases #4A to #8A), it is assumed that one phase of the primary breaker becomes stuck in one phase (only) during fault clearing; thus the 3-phase fault is converted into 1-phase fault after the primary clearing time of 5 cycles. The stuck-breaker condition is cleared by opening the backup fault clearing breakers. To determine the critical backup fault clearing time, the primary fault clearing time is fixed at 5 cycles and the opening of backup breakers is prolonged until the Big Cajun 2 and/or other nearby machines go out-of-step.

The Big Cajun 2 station has a double breaker connection scheme for 500 kV lines to Fancy Point and Webre. In fault cases #4A and #5A, the backup clearing time is extended until there is an out-of-step condition. These fault cases involved a three-

phase fault (with stuck-breaker on one pole only) with the loss of the following facilities at primary fault clearing:

- Case #4A
  - Primary Breaker Open: Trip Big Cajun 2 – Webre 500 kV line
  - Stuck-breaker: # 20550
  - Back-up Breaker Open: No facilities tripped
- Case #5A
  - Primary Breaker Open: Trip Big Cajun 2 – Fancy Point 500 kV line
  - Stuck-breaker: # 20535
  - Back-up Breaker Open: No facilities tripped

The critical clearing time for backup clearing was found to be higher than the typical backup clearing time of 9 cycles. Thus, adequate margins are available in the system from an angular stability perspective.

Fault case #6A is same as case #5A, but here the breaker #20540 is stuck (Ref. Breaker Layout in Figure 2-3). Based on the switching diagram the backup clearing results in tripping of Unit #1. The simulation confirms that reducing the local generation increases the critical clearing time for this line (the backup CCT for #6A is 8 cycles whereas for #5A it is 7 cycles).

- Case #6A
  - Primary Breaker Open: Trip Big Cajun 2 – Fancy Point 500 kV line
  - Stuck-breaker: # 20540
  - Back-up Breaker Open: Big Cajun 2 Unit #1 Tripped

In case #7A, a 3-Phase fault at 500 kV side of the Fancy Point 500/230 kV auto-transformer is simulated.

- Case #7A
  - Primary Breaker Open: Station transformer is tripped
  - Stuck-breaker: # 20770
  - Back-up Breaker Open: Trip Fancy Pt. – McKnight 500 kV Line and Fancy Pt. – Big Cajun 2 500 kV line.

The system was found to be stable until a backup clearing time of up to 60 cycles. Simulations with further increase in fault duration were not performed.

Three phase fault on the Webre- Wells 500 kV line is simulated in case #8A.

- Case #8A
  - Primary Breaker Open: Webre – Wells 500 kV line is tripped
  - Stuck-breaker: # 20580
  - Back-up Breaker Open: Trip Weber – Big Cajun 2 500 kV Line and Weber – Bayou La Butte 500 kV line.

The system was found to be stable until a backup clearing time of 60 cycles. Simulations with further increase in fault duration were not performed.

The CCTs determined in the above simulations are well above the typical primary and backup fault clearing times assumed in the study. Hence, it may be concluded that adequate margins is present from a system stability point of view. The results from the above simulations are summarized in Table 2-2.

REST OF THIS PAGE INTENTIONALLY LEFT BLANK

Table 2-2: Stability Analysis Results (Angular Stability Criteria)

Fault Case	Fault Location	Fault Type	Critical Clearing Time (Cy)		Stuck	Primary		Secondary		Limiter
#			Primary	Back-up	Breaker#	Breaker Trip #	Tripped Element	Breaker Trip #	Tripped Element	
1	Big Cajun 2 - Webre 500 kV	3PH	**9**	None	None	Big Cajun 2 Brk# 20550,20555 Webre Brk# 20580, 20565	Big Cajun 2 - Webre 500 kV	None		Big Cajun 2 units out-of-step
2	Big Cajun 2 - Fancy Pt. 500 kV	3PH	**9**	None	None	Big Cajun 2 Brk# 20535,20540 Fancy Point Brk# 20770, 20775	Big Cajun 2 - Fancy Point 500 kV	None		Big Cajun 2, Riverbend and Big Cajun 1 units out-of-step
3	Fancy Point - Big Cajun 2 500 kV	3PH	**9**	None	None	Fancy Point Brk#20770, 20775 Big Cajun 2 Brk# 20535,20540	Fancy Point - Big Cajun 2 500 kV	None		Big Cajun 2 units out-of-step
4A	Big Cajun 2 - Webre 500 kV	3PH-STK	5	**12**	Brk #20550	Big Cajun 2 Brk# 20555 Webre Brk# 20580, 20565	Big Cajun 2 - Webre 500 kV	Big Cajun 2 Brk# 20535, 20570	None	Riverbend units out-of-step
5A	Big Cajun 2 - Fancy Point 500 kV	3PH-STK	5	**11**	Brk #20535	Big Cajun 2 Brk# 20540 Fancy Point Brk# 20770, 20775	Big Cajun 2 - Fancy Point 500 kV	Big Cajun 2 Brk# 20570,20550	None	Big Cajun 2 units out-of-step
6A	Big Cajun 2 - Fancy Point 500 kV	3PH-STK	5	**13**	Brk #20540	Big Cajun 2 Brk# 20535 Fancy Point Brk# 20770, 20775	Big Cajun 2 - Fancy Point 500 kV	Big Cajun 2 Brk# 20545	Gen #1 Trip	Big Cajun 2 units out-of-step
7A	Fancy Point 500/230 kV Auto	3PH-STK	5	**60**	Brk #20770	Fancy Point Brk# 20765	Fancy Pt. 500/230 kV auto	Fancy Point Brk# 20775	Fancy Pt. - McKnight 500 kV (TBD) Fancy Pt. - Big Cajun 2 500 kV (TBD)	Stable
8A	Webre - Wells 500 kV	3PH-STK	5	**60**	Brk #20580	Webre Brk# 20585 Wells #13730,13735	Webre - Wells 500 kV	Webre Brk# 20565	Webre - Big Cajun 2 500 kV (TBD) Webre - Bayou Butte 500 kV (TBD)	Stable

1. **Bold Green Clearing Time** = Critical clearing time more than typical fault clearing times (5 cycles for primary clearing; 9 cycles for backup clearing).

2. **Red Bold Clearing Time** = Critical clearing time less than typical fault clearing times (5 cycles for primary clearing; 9 cycles for backup clearing).

3. All 500 kV breakers are IPO breakers. For simulation of three-phase stuck-breaker faults, the three-phase fault is converted to a single-line-to-ground fault at normal clearing time.

Voltage Dip Performance

The results of Table 2-2 show that the critical clearing time for fault cases #1, #2 and #3 is 9 cycles. A review of the simulation plots at the 9 cycle clearing time shows that although the system is stable, there are voltage dip violations. Specifically, bus voltages at Big Cajun 2 500 kV and/or nearby 500 kV buses exhibited voltage dips exceeding 30% of the pre-fault values after tripping the faulted facility, thus "violating" the criteria. It is important to stress here that voltage dip criteria are not applicable for three-phase stuck-breaker faults in accordance with Entergy planning procedures. See reference [1]. However for the purposes of this study, the transient voltage response of such faults were compared against the least stringent voltage dip criteria where voltage dip is not to exceed 30% at any bus and the CCTs were computed on this basis.

The critical clearing times needed to satisfy the voltage criteria are shown in Table 2-3. The CCTs for fault cases #1, #2 and #3 are 7 cycles, 8 cycles and 8 cycles respectively; these CCTs are well above the 5 cycle normal clearing time and therefore it is concluded that there is adequate margin in the system before voltage dip criteria are violated.

Fault cases #4A and #5A exhibited critical clearing times that were lower than typical 500 kV backup clearing times. For these faults, extending the backup clearing times beyond their respective CCTs resulted in voltage dip "violations" at Big Cajun 2 500 kV bus. The Big Cajun 2 500 kV bus voltage for fault case #4A with backup fault clearing at 12 cycles and 8 cycles after primary clearing is shown in Figure 2-7.

Fault cases #4A, #5A and #6A were next repeated for the pre-project case. The backup clearing times to avoid unacceptable transient voltage dip were found to be same as those determined from the post-project case. These results imply that project E002 does not adversely impact system stability. The plots for simulations on the pre-project case are given in Appendix B.2.2.

Further, as per Entergy's procedures, the simulations were run for normally cleared single-line-to-ground fault followed by stuck-breaker condition. No voltage violations were observed in these simulations. The plots for these simulations are given in Appendix B.2.3. The Big Cajun 2 500 kV bus voltage for fault case #4A (3-phase IPO stuck-breaker fault) is shown in Figure 2-8. For the sake of comparison, the single-line-to-ground stuck-breaker version of this fault is also shown. Note that although the 3-phase IPO fault shows a voltage dip violation, there is no such violation for the single-line-to-ground fault.

Table 2-3: Stability Analysis Results (Transient Voltage Criteria)

Fault Case	Fault Location	Fault Type	Critical Clearing Time (Cy)		Fault Clearing Time (Cy)						Limiter
			Angular Stability		Transient Voltage				Fault Type: SLG		
			Post Project		Post Project		Pre-Project		Post Project		
#			Primary	Back-up	Primary	Back-up	Primary	Back-up	Primary	Back-up	
1	Big Cajun 2 - Webre 500 kV	3PH	**9**	None	**7**	None	N/A	N/A	N/A	N/A	Big Cajun 2 500 kV transient voltage dip exceeds 30% for 8cy clearing time
2	Big Cajun 2 - Fancy Pt. 500 kV	3PH	**9**	None	**8**	None	N/A	N/A	N/A	N/A	Big Cajun 2 500 kV transient voltage dip exceeds 30% for 9cy clearing time
3	Fancy Point - Big Cajun 2 500 kV	3PH	**9**	None	**8**	None	N/A	N/A	N/A	N/A	Big Cajun 2 500 kV transient voltage dip exceeds 30% for 9cy clearing time
4A	Big Cajun 2 - Webre 500 kV	3PH-STK	5	**12**	5	**8**	5	**8**	5	**12**	Big Cajun 2 500 kV transient voltage dip exceeds 30% for 9cy backup clearing time
5A	Big Cajun 2 - Fancy Point 500 kV	3PH-STK	5	**11**	5	**7**	5	**7**	5	**11**	Big Cajun 2 500 kV transient voltage dip exceeds 30% for 8cy backup clearing time
6A	Big Cajun 2 - Fancy Point 500 kV	3PH-STK	5	**13**	5	**9**	5	**9**	5	**13**	Big Cajun 2 500 kV transient voltage dip exceeds 30% for 10cy backup clearing time
7A	Fancy Point 500/230 kV Auto	3PH-STK	5	**60**	5	**60**	N/A	N/A	N/A	N/A	-
8A	Webre - Wells 500 kV	3PH-STK	5	**60**	5	**60**	N/A	N/A	N/A	N/A	-

1. **Bold Green Clearing Time** = Critical clearing time more than typical fault clearing times (5 cycles for primary clearing; 9 cycles for backup clearing).

2. **Red Bold Clearing Time** = Critical clearing time less than typical fault clearing times (5 cycles for primary clearing; 9 cycles for backup clearing).

3. All 500 kV breakers are IPO breakers. For simulation of three-phase stuck-breaker faults, the three-phase fault is converted to a single-line-to-ground fault at normal clearing time.

4. N/A: Not simulated

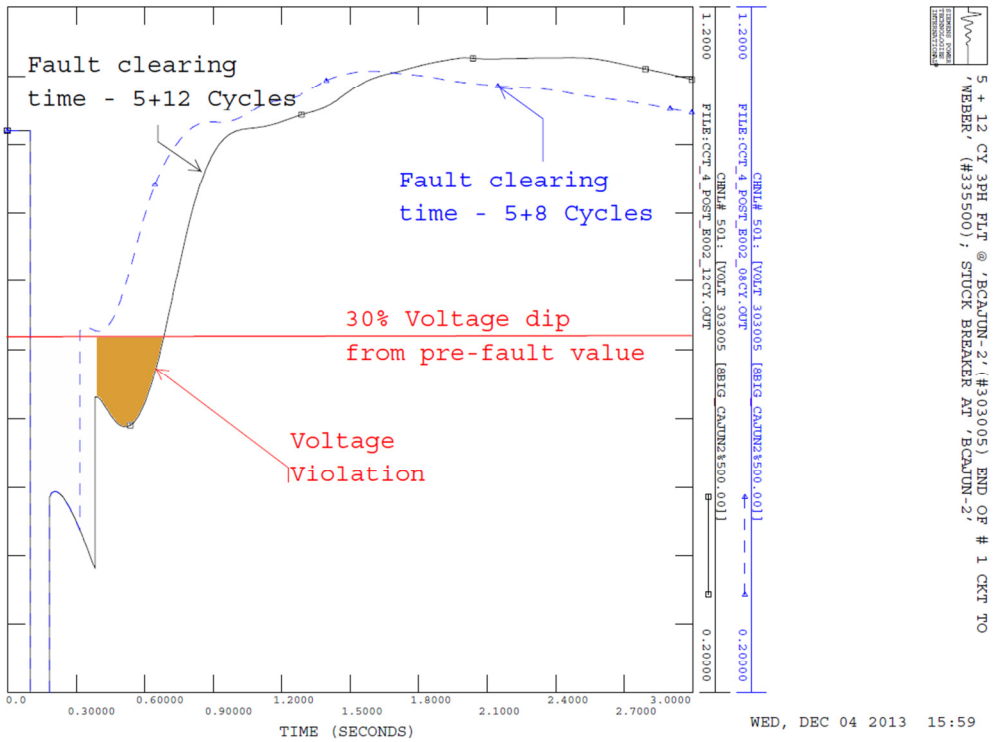

Figure 2-7: Big Cajun 2 500 kV Bus Voltage for Fault Case #4A (Total Fault clearing time is 5+8 Cycles and 5+12 Cycles)

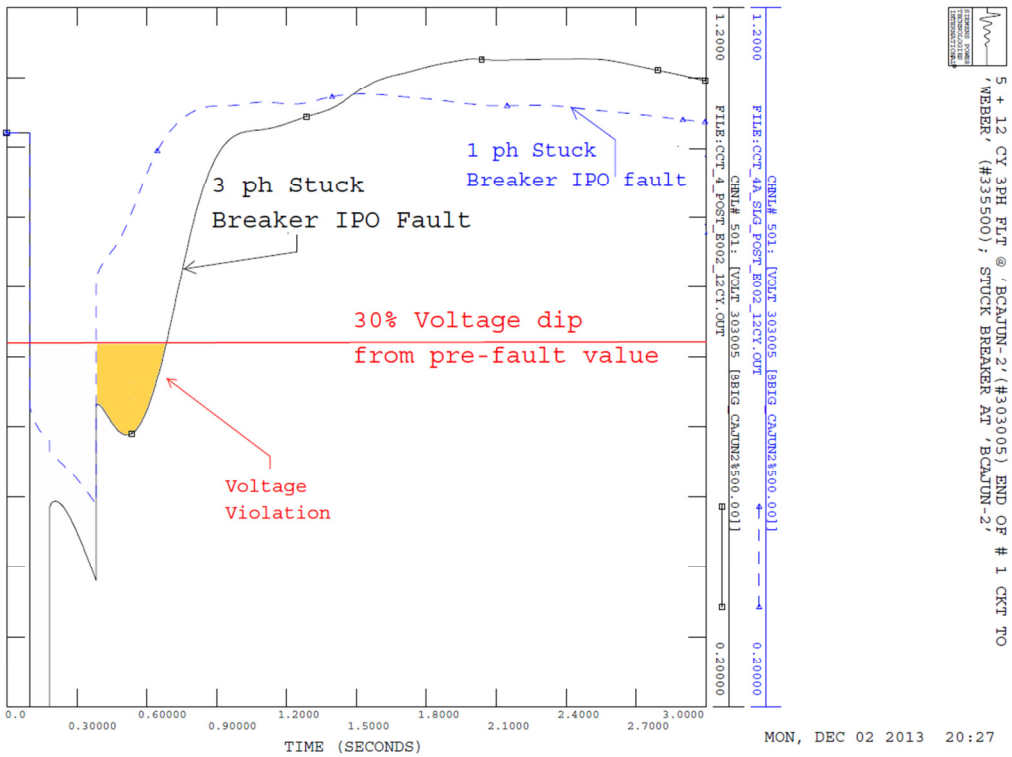

Figure 2-8: Big Cajun 2 500 kV Bus Voltage for Fault Case #4A (3-Ph Stuck-breaker IPO Fault and 1-Ph Stuck-breaker Fault)

3 CONCLUSIONS

A technical study was conducted to determine whether project E002 adversely impacts system stability performance. The study was performed on the basis of critical clearing time (CCT) simulations. Three-phase faults with normal clearing and with consideration of breaker failure were simulated at a limited number of 500 kV buses (Big Cajun 2, Fancy Point, and Webre).

Based on the results of stability analysis, it can be concluded that proposed E002 project does not adversely impact the stability of the Entergy system.

4 REFERENCED DOCUMENTS

1. Entergy Transmission Local Planning Criteria, February 25, 2007. Available at: https://www.oatioasis.com/woa/docs/EES/EESdocs/transmission_local_planning_criteria.pdf

ABB

ABB Inc.
940 Main Campus Drive
Raleigh NC 27606
12 Cornell Rd.
Latham, NY 12309, USA

MISO
Stability Study for Project E002
December 9, 2013