Dalreed / Arlington / Sherman County Area Study

Greg Linden, P.E.

Dalreed / Arlington / Sherman County System Overview

Study Covers:

Transmission 230 kV & 69 kV:

- Dalreed 230-34.5 kV
- DeMoss (BPA) 115-69 kV

Distribution Substations 69-12.47 and 69-20.8 kV:

- Arlington
- Blalock
- Gordon Hollow

Distribution Substations 34.5-4.16 kV:

- Simtag
- Willow Cove

Transfer Substation 69-34.5 kV Creek

The 20.8 kV system from Gordon Hollow to Wasco was not modeled

Dalreed / Arlington / Sherman County System Overview

Transmission Sources

- 230 kV Source to Dalreed via Jones Canyon (BPA) and McNary (BPA)
- 69 kV Source from DeMoss (BPA)

Limited transfer capability between the Arlington 69 kV and Dalreed 34.5 kV systems via the Creek Substation

Local Generation at Threemile Canyon and Threemile Farms assumed offline during peak loading level.

Dalreed / Arlington / Sherman County System Overview

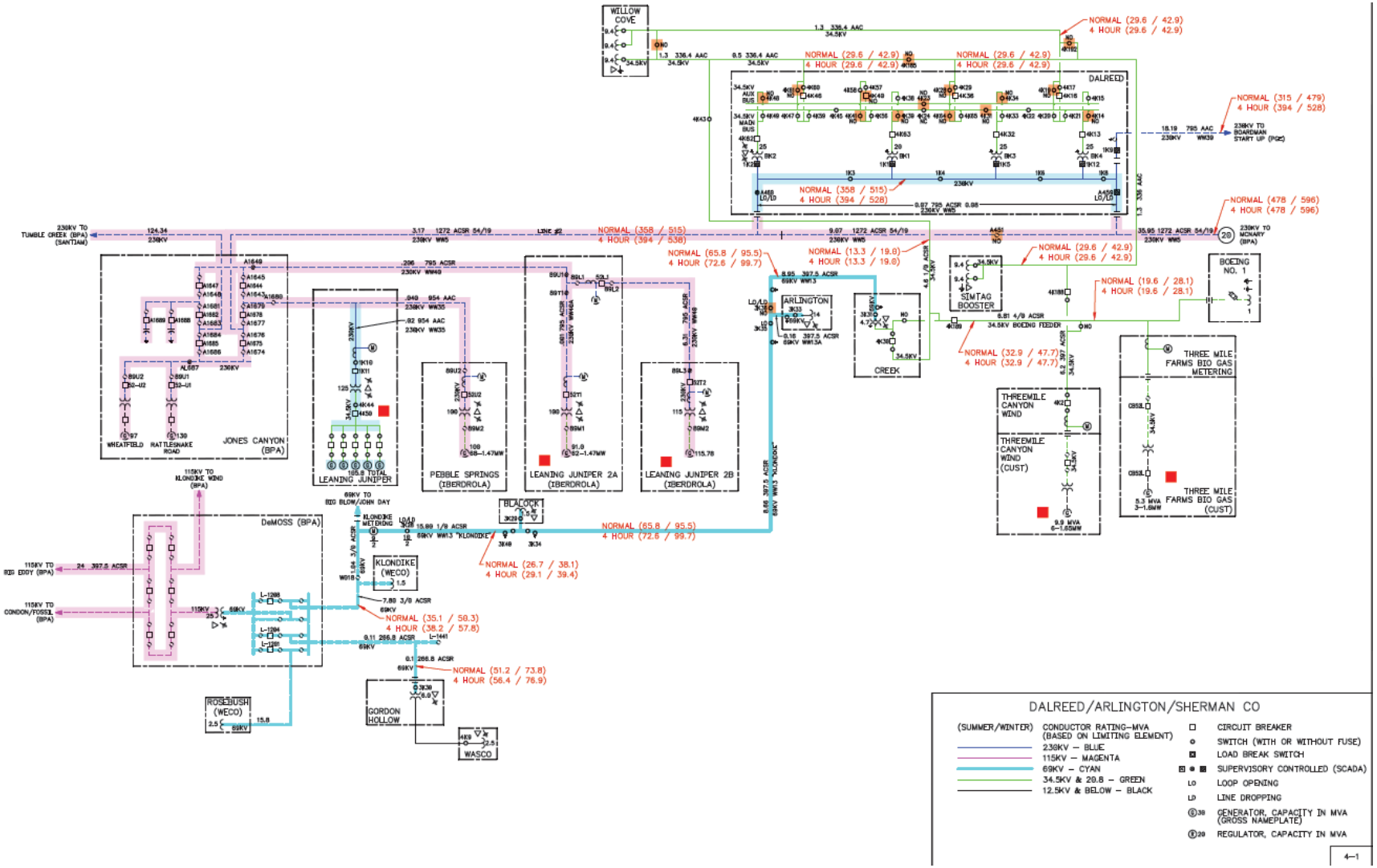

PACIFICORP
A MIDAMERICAN ENERGY HOLDINGS COMPANY

Pacific Power | Rocky Mountain Power

Area Load Growth – Dalreed

Base System Load

Season (Non-Coincidental)	System Load	Utilization
Summer 2018	45.7 MW	65.3%
Winter 2017-2018	5.9 MW	7%

Growth Rate

Season	Dalreed
Summer	0.0%
Winter	0.0%

Projected Load Growth

Season (Non-Coincidental)	System Load	Utilization
Summer 2021	46.3 MW (block load additions totaling 0.6 MW)	66.1%
Winter 2021-2022	5.9 MW	7%

Area Load Growth – Simtag & Willow Cove

Base System Load

Season (Non-Coincidental)	System Load	Utilization
Summer 2017	40.7 MW	86.8%
Winter 2017-2018	0.0 MW	0.0%

Growth Rate

Season	Simtag, Willow Cove
Summer	0.0%
Winter	0.0%

Projected Load Growth

Season (Non-Coincidental)	System Load	Utilization
Summer 2021	40.9 MW	87.3%
Winter 2021-2022	0.0 MW	0.0%

Area Load Growth – Arlington, Blalock, Gordon Hollow

Base System Load

Season (Non-Coincidental)	System Load	Utilization
Summer 2017	5.5 MW	54.2%
Winter 2017-2018	8.8 MW	72.3%

Growth Rate

Season	Arlington, Blalock, GH
Summer	0.0%
Winter	0.0%

Projected Load Growth

Season (Non-Coincidental)	System Load	Utilization
Summer 2021	5.5 MW	54.2%
Winter 2021-2022	8.8 MW	72.3%

Planned System Improvements

Study Period 2018 thru 2022/23:

Because there is a very limited load growth and an adequate existing system, there are not load driven upgrades needed through the end of the study period.

Contingencies

The Dalreed Substation is fed from the Jones Canyon (BPA) to McNary (BPA) 230 kV line and will be without power with the loss of the line. After it is determined which side of the Dalreed Substation the fault is on, open the appropriate switch in Dalreed and re-energize the substation. Both 230 kV sources easily have the capacity to serve the entire substation. In the unlikely case of faults on both sides of the line, repair the source with the quickest correction time and re-energize.

With the addition of a fourth power transformer at the Dalreed Substation, the substation has the capacity to serve the entire load off of the remaining three transformers. In the fall, winter, and early spring, for planned construction all load can be fed off of one transformer due to the pumping load being offline.

For the loss of the Big Eddy 115 kV line to DeMoss (BPA) or a loss of the 115 to 69 kV transformer at DeMoss (BPA), use the Creek Substation to feed the 69 kV system from the 34.5 kV feeder fed from Breaker 4K46 out of the Dalreed Substation. The ability to transfer load is good for both the summer and winter loading conditions.

Contingencies

For the loss of the Dalreed Substation or a permanent fault on the 34.5 kV system beyond Breaker 4K46, a portion of feeder load can be fed from the 69 kV source through the Creek Substation. Open switch 4K43 on the 34.5 kV line and serve up to 3.75 MVA at 0.82 PF for either the summer or winter seasons. Full pumping load at Willow Cove Bank 1 cannot be supported.

For the loss of a 34.5 to 4.16 kV, 9.375 MVA transformer at the Simtag or Willow Cove Substations, install the spare, which is located in the Dalreed Substation.

For the loss of a power transformer at the Arlington, Blalock or Gordon Hollow Substations, install an available mobile transformer (115 x 69 – 20.8 x 12.47 x 4.16 kV 10.2 MVA mobile located in Portland).

Dalreed / Arlington / Sherman County Area Study

- Any Questions?