XCEL ENERGY OPERATING COs JOINT OATT Version: 0.0.0 Effective: 7/30/2010

Open Access Transmission Tariff

Of

Northern States Power Company

Northern States Power Company (Wisconsin)

Public Service Company of Colorado

Southwestern Public Service Company

The Utility Operating Company Subsidiaries Of Xcel Energy Inc.

This Published Tariff incorporates changes accepted in FERC Order dated Feb. 18, 2016 in ER16-178-000.

TABLE OF CONTENTS Version: 0.5.0 Effective: 1/1/2016

TABLE OF CONTENTS

I. COMMON SERVICE PROVISIONS

1 Definitions

1.1 Affiliate
1.2 Ancillary Services
1.3 Annual Transmission Costs
1.4 Application
1.5 Commission
1.6 Completed Application
1.7 Control Area
1.8 Curtailment
1.9 Delivering Party
1.10 Designated Agent
1.11 Direct Assignment Facilities
1.12 Eligible Customer
1.13 Facilities Study
1.14 Firm Point-To-Point Transmission Service
1.15 Good Utility Practice
1.16 Interruption
1.17 Load Ratio Share
1.18 Load Shedding
1.19 Long-Term Firm Point-To-Point Transmission Service
1.20 Native Load Customers
1.21 NERC TLR Procedures
1.22 Network Customer
1.23 Network Integration Transmission Service
1.24 Network Load
1.25 Network Operating Agreement
1.26 Network Operating Committee
1.27 Network Resource
1.28 Network Upgrades
1.29 Non-Firm Point-To-Point Transmission Service
1.30 Non-Firm Sale
1.31 Non-Variable Energy Resource
1.32 Open Access Same-Time Information System (OASIS)
1.33 Part I
1.34 Part II
1.35 Part III
1.35A Part IV
1.36 Parties
1.37 Point(s) of Delivery
1.38 Point(s) of Receipt
1.39 Point-To-Point Transmission Service
1.40 Power Purchaser
1.41 Pre-Confirmed Application
1.42 Receiving Party

1.43 Regional Transmission Group (RTG)
1.44 Reserved Capacity
1.45 Service Agreement
1.46 Service Commencement Date
1.47 Short-Term Firm Point-To-Point Transmission Service
1.48 System Condition
1.49 System Impact Study
1.50 Third-Party Sale
1.51 Transmission Customer
1.52 Transmission Provider
1.53 Transmission Provider's Monthly Transmission System Peak
1.54 Transmission Service
1.55 Transmission System
1.56 Variable Energy Resource

2 Initial Allocation and Renewal Procedures
2.1 Initial Allocation of Available Transfer Capability
2.2 Reservation Priority For Existing Firm Service Customers

3 Ancillary Services
3.1 Scheduling, System Control and Dispatch Service
3.2 Reactive Supply and Voltage Control from Generation or Other Sources Service
3.3 Regulation and Frequency Response Service
3.4 Energy Imbalance Service
3.5 Operating Reserve - Spinning Reserve Service
3.6 Operating Reserve - Supplemental Reserve Service
3.7 Flex Reserve Service
3.8 Generator Imbalance Service

4 Open Access Same-Time Information System (OASIS)
4.1 Terms and Conditions
4.2 NAESB WEQ Business Practice Standards

5 Local Furnishing Bonds
5.1 Transmission Providers That Own Facilities Financed by Local Furnishing Bonds
5.2 Alternative Procedures for Requesting Transmission Service

6 Reciprocity

7 Billing and Payment
7.1 Billing Procedure
7.2 Interest on Unpaid Balances
7.3 Customer Default

8 Accounting for the Transmission Provider's Use of the Tariff
8.1 Transmission Revenues
8.2 Study Costs and Revenues

9 Regulatory Filings

10 Force Majeure and Indemnification
10.1 Force Majeure
10.2 Indemnification

11 Creditworthiness

12 Dispute Resolution Procedures
12.1 Internal Dispute Resolution Procedures
12.2 Mediation Procedures

12.3 External Arbitration Procedures
12.4 Arbitration Decisions
12.5 Costs
12.6 Rights Under The Federal Power Act

II. POINT-TO-POINT TRANSMISSION SERVICE
Preamble
13 Nature of Firm Point-To-Point Transmission Service
13.1 Term
13.2 Reservation Priority
13.3 Use of Firm Transmission Service by the Transmission Provider
13.4 Service Agreements
13.5 Transmission Customer Obligations for Facility Additions or Redispatch Costs
13.6 Curtailment of Firm Transmission Service
13.7 Classification of Firm Transmission Service
13.8.1 Scheduling of Firm Point-To-Point Transmission Service on the PSCo System
13.8.2 Scheduling of Firm Point-To-Point Transmission Service on the NSP and SPS Systems
14 Nature of Non-Firm Point-To-Point Transmission Service
14.1 Term
14.2 Reservation Priority
14.3 Use of Non-Firm Point-To-Point Transmission Service by the Transmission Provider
14.4 Service Agreements
14.5 Classification of Non-Firm Point-To-Point Transmission Service
14.6.1 Scheduling of Non-Firm Point-To-Point Transmission Service on the PSCo System
14.6.2 Scheduling of Non-Firm Point-To-Point Transmission Service on the NSP and SPS Systems
14.7 Curtailment or Interruption of Service
15 Service Availability
15.1 General Conditions
15.2 Determination of Available Transfer Capability
15.3 Initiating Service in the Absence of an Executed Service Agreement
15.4 Obligation to Provide Transmission Service that Requires Expansion or Modification of the Transmission System, Redispatch or Conditional Curtailment
15.5 Deferral of Service
15.6 Other Transmission Service Schedules
15.7 Real Power Losses
16 Transmission Customer Responsibilities
16.1 Conditions Required of Transmission Customers
16.2 Transmission Customer Responsibility for Third-Party Arrangements
17 Procedures for Arranging Firm Point-To-Point Transmission Service
17.1 Application
17.2 Completed Application
17.3 Deposit
17.4 Notice of Deficient Application

17.5 Response to a Completed Application
17.6 Execution of Service Agreement
17.7 Extensions for Commencement of Service
18 Procedures for Arranging Non-Firm Point-To-Point Transmission Service
18.1 Application
18.2 Completed Application
18.3.1 Reservation of Non-Firm Point-To-Point Transmission Service on the PSCo System
18.3.2 Reservation of Non-Firm Point-To-Point Transmission Service on the NSP and SPS Systems
18.4 Determination of Available Transfer Capability
19 Additional Study Procedures For Firm Point-To-Point Transmission Service Requests
19.1 Notice of Need for System Impact Study
19.2 System Impact Study Agreement and Cost Reimbursement
19.3 System Impact Study Procedures
19.4.1 Facilities Study Procedures
19.4.2 Clustered Transmission Service Requests
19.5 Facilities Study Modifications
19.6 Due Diligence in Completing New Facilities
19.7 Partial Interim Service
19.8 Expedited Procedures for New Facilities
19.9 Penalties For Failure to Meet Study Deadlines
20 Procedures if The Transmission Provider is Unable to Complete New Transmission Facilities for Firm Point-To-Point Transmission Service
20.1 Delays in Construction of New Facilities
20.2 Alternatives to the Original Facility Additions
20.3 Refund Obligation for Unfinished Facility Additions
21 Provisions Relating to Transmission Construction and Services on the Systems of Other Utilities
21.1 Responsibility for Third-Party System Additions
21.2 Coordination of Third-Party System Additions
22 Changes in Service Specifications
22.1 Modifications On a Non-Firm Basis
22.2 Modification On a Firm Basis
23 Sale or Assignment of Transmission Service
23.1 Procedures for Assignment or Transfer of Service
23.2 Limitations on Assignment or Transfer of Service
23.3 Information on Assignment or Transfer of Service
24 Metering and Power Factor Correction at Receipt and Delivery Points(s)
24.1 Transmission Customer Obligations
24.2 Transmission Provider Access to Metering Data
24.3 Power Factor
25 Compensation for Transmission Service
26 Stranded Cost Recovery
27 Compensation for New Facilities and Redispatch Costs

III. NETWORK INTEGRATION TRANSMISSION SERVICE
Preamble
28 Nature of Network Integration Transmission Service

28.1 Scope of Service
28.2 Transmission Provider Responsibilities
28.3 Network Integration Transmission Service
28.4 Secondary Service
28.5 Real Power Losses
28.6 Restrictions on Use of Service

29 Initiating Service
29.1 Condition Precedent for Receiving Service
29.2 Application Procedures:
29.3 Technical Arrangements to be Completed Prior to Commencement of Service
29.4 Network Customer Facilities
29.5 Filing of Service Agreement

30 Network Resources
30.1 Designation of Network Resources
30.2 Designation of New Network Resources
30.3 Termination of Network Resources
30.4 Operation of Network Resources
30.5 Network Customer Redispatch Obligation
30.6 Transmission Arrangements for Network Resources Not Physically Interconnected With The Transmission Provider
30.7 Limitation on Designation of Network Resources
30.8 Use of Interface Capacity by the Network Customer
30.9 Network Customer Owned Transmission Facilities

31 Designation of Network Load
31.1 Network Load
31.2 New Network Loads Connected With the Transmission Provider
31.3 Network Load Not Physically Interconnected with the Transmission Provider
31.4 New Interconnection Points
31.5 Changes in Service Requests
31.6 Annual Load and Resource Information Updates

32 Additional Study Procedures For Network Integration Transmission Service Requests
32.1 Notice of Need for System Impact Study
32.2 System Impact Study Agreement and Cost Reimbursement
32.3 System Impact Study Procedures
32.4.1 Facilities Study Procedures
32.4.2 Clustered Transmission Service Requests
32.5 Penalties For Failure to Meet Study Deadlines

33 Load Shedding and Curtailments
33.1.1 Procedures on the PSCo System
33.1.2 Procedures on the NSP and SPS Systems
33.2 Transmission Constraints
33.3 Cost Responsibility for Relieving Transmission Constraints
33.4 Curtailments of Scheduled Deliveries
33.5 Allocation of Curtailments
33.6 Load Shedding
33.7 System Reliability

34 Rates and Charges

34.1.1 Monthly Demand Charge on the SPS Transmission System
34.1.2 Monthly Demand Charge on the PSCo Transmission System
34.2 Determination of Network Customer's Monthly Network Load
34.3 Determination of Network Customer's Average Network Load on the SPS System
34.4 Determination of Transmission Provider's Monthly Transmission System Load on the SPS Transmission System
34.5 Reserved For Future Use
34.6 Determination of Transmission Provider's Average Transmission System Load on the SPS Transmission System
34.7 Redispatch Charge
34.8 Stranded Cost Recovery
34.9 SPS Meter Charge
35 Operating Arrangements
35.1 Operation under The Network Operating Agreement
35.2 Network Operating Agreement
35.3 Network Operating Committee

IV. BALANCING AUTHORITY ANCILLARY SERVICES
Preamble
36 Definitions
36.1 Ancillary Service Customer (ASC)
36.2 Ancillary Service Load
36.3 Balancing Authority Area (BAA)
36.4 Balancing Authority (BA) Operator
36.5 Balancing Authority (BA) Services
36.6 Internal Transmission Owner (ITO
36.7 Load Serving Entity (LSE)
36.8 Reserved Capacity
36.9 RMRG
36.10 WECC
37 Nature of Balancing Authority Services
37.1 Requirement to Provide and Obtain BA Services
37.2 Source and Acquisition of BA Services
37.3 Sufficiency of Balancing Authority Services
37.4 Real Power Losses
37.5 Service Agreements
37.6 No Transmission Service Provided
38 Authority and Obligations
38.1 BA Operator Authority
38.2 ASC Obligations
39 Metering
39.1 ASC Obligations
39.2 Metering Data
39.3 Testing
39.4 Meter Failure
39.5 Billing Adjustments
39.6 Examination of Records
39.7 BA Operator Access to Metering Data
40 Billing

V. JOINT DISPATCH TRANSMISSION SERVICE (Applicable to Public Service Company of Colorado only)
Preamble
41 Definitions
41.1 Joint Dispatch Arrangement
41.2 Joint Dispatch Agreement
41.3 Joint Dispatch Transmission Service
41.4 Service Agreement for Joint Dispatch Transmission Service ("Service Agreement")
41.5 Joint Dispatch Transmission Service Customer
42 Nature of Joint Dispatch Transmission Service
42.1 Limited Transmission Provider Responsibilities
42.2 Real Power Losses
42.3 Restrictions on Use of Service
42.4 Imbalance Service
43 Initiating Service
43.1 Condition Precedent for Receiving Service
43.2 Application Procedures
43.3 Joint Dispatch Transmission Customer Facilities
43.4 Filing of Service Agreement

SCHEDULE 1 - Scheduling, System Control and Dispatch Service
SCHEDULE 2 - Reactive Supply and Voltage Control from Generation Sources Service
SCHEDULE 3 - Regulation and Frequency Response Service
SCHEDULE 3A - Regulation and Frequency Response Service for Point-To-Point Transmission Service for the PSCo Balancing Authority Area
SCHEDULE 4 - Energy Imbalance Service
SCHEDULE 4A - Reserve Sharing Energy Charges
SCHEDULE 4B - Reserve Sharing Energy Charges
SCHEDULE 5 - Operating Reserve - Spinning Reserve Service
SCHEDULE 6 - Operating Reserve - Supplemental Reserve Service
SCHEDULE 7 - Long-Term Firm and Short-Term Firm Point-To-Point Transmission Service
SCHEDULE 8 - Non-Firm Point-To-Point Transmission Service
SCHEDULE 9 - Generator Imbalance Service
SCHEDULE 10 - Tax Adjustment Rider for Service by Southwestern Public Service Company
SCHEDULE 11 - Reserved For Future Use
SCHEDULE 12 - Midwest Independent Transmission System Operator, Inc. Charges
SCHEDULE 13 - Network Integration Transmission Service on the PSCo Transmission System
SCHEDULE 13A - Network Integration Transmission Service across the Lamar Tie Line
SCHEDULE 14 - Point-to-Point Transmission Losses on the PSCo Transmission System
SCHEDULE 15 - Joint Dispatch Transmission Service
SCHEDULE 16 - Flex Reserve Service
ATTACHMENT A-1 - Form of Service Agreement For Short-Term Firm Point-To-Point Transmission Service

ATTACHMENT A-2 - Form of Service Agreement For Long-Term Firm Point-To-Point Transmission Service
ATTACHMENT A-3 - Form of Service Agreement For The Resale, Reassignment Or Transfer Of Point-To-Point Transmission Service
ATTACHMENT B - Form of Service Agreement For Non-Firm Point-To-Point Transmission Service
ATTACHMENT C - Methodology To Assess Available Transfer Capability
ATTACHMENT D - Methodology for Completing a System Impact Study
ATTACHMENT E - Index of Point-To-Point Transmission Service Customers
ATTACHMENT F - Form of Service Agreement For Network Integration Transmission Service
ATTACHMENT G - Form of Network Operating Agreement
ATTACHMENT H - Annual Transmission Revenue Requirement For Network Integration Transmission Service
ATTACHMENT I - Index of Network Integration Transmission Service Customers
ATTACHMENT J - Procedures for Addressing Parallel Flows
ATTACHMENT K - Form of System Impact Study Agreement
ATTACHMENT L - Form of Facilities Study Agreement
ATTACHMENT M - Methodology for Allocating Transmission Revenues Among Utility Operating Companies
ATTACHMENT N - Standard Large Generator Interconnection Procedures (LGIP) - Applicable to Generating Facilities that exceed 20 MWs
ATTACHMENT O - Public Service Company of Colorado Formulaic Rates
ATTACHMENT O – SPS - Southwestern Public Service Company Formulaic Rates
ATTACHMENT P - Standard Small Generator Interconnection Procedures (SGIP) - Applicable to Generating Facilities less than 20 MWs
ATTACHMENT Q - Creditworthiness Procedures
ATTACHMENT R – PSCo - Transmission Planning Process
ATTACHMENT S - Reserved For Future Use
ATTACHMENT T - Form of Service Agreement For Balancing Authority Ancillary Services Applicable to the Public Service Company of Colorado (PSCo) System
ATTACHMENT U - Form of Service Agreement For Transmission to Load Interconnection Service
ATTACHMENT V - Form of Service Agreement For Joint Dispatch Transmission Service
ATTACHMENT AA – Service Agreements For Point-To-Point Transmission Service
ATTACHMENT BB – Service Agreements For Network Transmission Service
ATTACHMENT CC – Service Agreements For Generation Interconnection Service
ATTACHMENT DD – Service Agreements For Balancing Authority Ancillary Services
ATTACHMENT EE - Reserved For Future Use
ATTACHMENT FF – Service Agreements For Transmission to Load Interconnection Service

Additional Volumes of
Xcel Energy Operating Companies
Transmission Service Tariffs

Volume No.	Contents
Joint Open Access Transmission Tariff	
Original Volume 2	Reserved for Future Use
FERC Electric Transmission Tariff	
Original Volume 3	Northern States Power Company transmission rate schedules
Original Volume 4	Northern States Power Company (Wisconsin) transmission rate schedules
Original Volume 5	Public Service Company of Colorado transmission rate schedules
Original Volume 6	Southwestern Public Service Company) transmission rate schedules
Original Volume 7	WestConnect Point-to-Point Regional Transmission Service Experiment Tariff

Note: The noted tariff volumes contain transmission-related rate schedules filed by the

Transmission Services function of the Xcel Energy Operating Companies.

Rate schedules related to electric supply services may be found in the Electric Services Tariffs separately maintained by the Xcel Energy Markets function.

I. COMMON SERVICE PROVISIONS

1 Definitions Version: 0.4.0 Effective: 1/1/2015

1 Definitions

1.1 Affiliate: With respect to a corporation, partnership, or other entity, each such other corporation, partnership or other entity that directly or indirectly, through one or more intermediaries, controls, is controlled by, or is under common control with, such corporation, partnership or other entity.

1.2 Ancillary Services: Those services, that are necessary to support the transmission of capacity and energy from resources to loads while maintaining reliable operation of the Transmission Provider's Transmission System in accordance with Good Utility Practice.

1.3 Annual Transmission Costs: The total annual cost of the Transmission System for purposes of Network Integration Transmission Service shall be the amount specified in Attachment H until amended by the Transmission Provider or modified by the Commission.

1.4 Application: A request by an Eligible Customer for transmission service pursuant to the provisions of the Tariff.

1.5 Commission: The Federal Energy Regulatory Commission.

1.6 Completed Application: An Application that satisfies all of the information and other requirements of the Tariff, including any required deposit.

1.7 Control Area: An electric power system or combination of electric power systems to which a common automatic generation control scheme is applied in order to:

(1) match, at all times, the power output of the generators within the electric power system(s) and capacity and energy purchased from entities outside the electric power system(s), with the load within the electric power system(s);

(2) maintain scheduled interchange with other Control Areas, within the limits of Good Utility Practice;

(3) maintain the frequency of the electric power system(s) within reasonable limits in accordance with Good Utility Practice; and

(4) provide sufficient generating capacity to maintain operating reserves in accordance with Good Utility Practice.

1.8 Curtailment: A reduction in firm or non-firm transmission service in response to a transfer capability shortage as a result of system reliability conditions.

1.9 Delivering Party: The entity supplying capacity and energy to be transmitted at Point(s) of Receipt.

1.10 Designated Agent: Any entity that performs actions or functions on behalf of the Transmission Provider, an Eligible Customer, or the Transmission Customer required under the Tariff.

1.11 Direct Assignment Facilities: Facilities or portions of facilities that are constructed by the Transmission Provider for the sole use/benefit of a particular Transmission Customer requesting service under the Tariff. Direct Assignment Facilities shall be specified in the Service Agreement that governs service to the Transmission Customer and shall be subject to Commission approval.

1.12 Eligible Customer: (i) Any electric utility (including the Transmission Provider and any power marketer), Federal power marketing agency, or any person generating electric energy for sale for resale is an Eligible Customer under the Tariff. Electric energy sold or produced by such entity may be electric energy produced in the United States, Canada or Mexico. However, with respect to transmission service that the Commission is prohibited from ordering by Section 212(h) of the Federal Power Act, such entity is eligible only if the service is provided pursuant to a state requirement that the Transmission Provider offer the unbundled transmission service, or pursuant to a voluntary offer of such service by the Transmission Provider. (ii) Any retail customer taking unbundled transmission service pursuant to a state requirement that the Transmission Provider offer the transmission service, or pursuant to a voluntary offer of such service by the Transmission Provider, is an Eligible Customer under the Tariff.

1.13 Facilities Study: An engineering study conducted by the Transmission Provider to determine the required modifications to the Transmission Provider's Transmission System, including the cost and scheduled completion date for such modifications that will be required to provide the requested transmission service.

1.14 Firm Point-To-Point Transmission Service: Transmission Service under this Tariff that is reserved and/or scheduled between specified Points of Receipt and Delivery pursuant to Part II of this Tariff.

1.15 Good Utility Practice: Any of the practices, methods and acts engaged in or approved by a significant portion of the electric utility industry during the relevant time period, or any of the practices, methods and acts which, in the exercise of reasonable judgment in light of the facts known at the time the decision was made, could have been expected to accomplish the desired result at a reasonable cost consistent with good business practices, reliability, safety and expedition. Good Utility Practice is not intended to be limited to the optimum practice, method, or act to the exclusion of all others, but rather to be acceptable practices, methods, or acts generally accepted in the region, including those practices required by Federal Power Act section 215(a)(4).

1.16 Interruption: A reduction in non-firm transmission service due to economic reasons pursuant to Section 14.7.

1.17 Load Ratio Share: For Network Integration Transmission Service where PSCo is the Transmission Provider, the Load Ratio Share shall be the ratio of a Transmission Customer's Average Network Load to the Transmission Provider's Average Transmission System Load computed in accordance with Sections 34.3 and 34.6 of the Network Integration Transmission Service under Part III of the Tariff.

For Network Integration Transmission Service where NSP is the Transmission Provider, the Load Ratio Share shall be the ratio of a Transmission Customer's Network Load to the Transmission Provider's total Transmission System Load computed in accordance with Section 34.5 of the Network Integration Transmission Service under Part III of the Tariff.

For Network Integration Transmission Service where SPS is the Transmission Provider, the Load Ratio Share shall be the ratio of a Transmission Customer's Average Network Load to the Transmission Provider's Average Transmission System Load computed in accordance with Sections 34.3 and 34.6 of the Network Integration Transmission Service under Part III of the Tariff.

1.18 Load Shedding: The systematic reduction of system demand by temporarily decreasing load in response to transmission system or area capacity shortages, system instability, or voltage control considerations under Part III of the Tariff.

1.19 Long-Term Firm Point-To-Point Transmission Service: Firm Point-To-Point Transmission Service under Part II of the Tariff with a term of one year or more.

1.20 Native Load Customers: The wholesale and retail power customers of the Transmission Provider on whose behalf the Transmission Provider, by statute, franchise, regulatory requirement, or contract, has undertaken an obligation to construct and operate the Transmission Provider's system to meet the reliable electric needs of such customers.

1.21 NERC TLR Procedures: Transmission Loading Relief procedures developed by the North American Electric Reliability Council ("NERC") which enable Transmission Providers to curtail transactions both on and off the contract path that contribute to an overload on the electric system in order to preserve system reliability.

1.22 Network Customer: An entity receiving transmission service pursuant to the terms of the Transmission Provider's Network Integration Transmission Service under Part III of the Tariff.

1.23 Network Integration Transmission Service: The transmission service provided under Part III of the Tariff.

1.24 Network Load: The load that a Network Customer designates for Network Integration Transmission Service under Part III of the Tariff. The Network Customer's Network Load shall include all load served by the output of any Network Resources designated by the Network Customer. A Network Customer may elect to designate less than its total load as Network Load but may not designate only part of the load at a discrete Point of Delivery. Where an Eligible Customer has elected not to designate a particular load at discrete points of delivery as Network Load, the Eligible Customer is responsible for making separate arrangements under Part II of the Tariff for any Point-To-Point Transmission Service that may be necessary for such non-designated load.

1.25 Network Operating Agreement: An executed agreement that contains the terms and conditions under which the Network Customer shall operate its facilities and the

technical and operational matters associated with the implementation of Network Integration Transmission Service under Part III of the Tariff.

1.26 Network Operating Committee: A group made up of representatives from the Network Customer(s) and the Transmission Provider established to coordinate operating criteria and other technical considerations required for implementation of Network Integration Transmission Service under Part III of this Tariff.

1.27 Network Resource: Any designated generating resource owned, purchased or leased by a Network Customer under the Network Integration Transmission Service Tariff. Network Resources do not include any resource, or any portion thereof, that is committed for sale to third parties or otherwise cannot be called upon to meet the Network Customer's Network Load on a non-interruptible basis, except for purposes of fulfilling obligations under a reserve sharing program.

1.28 Network Upgrades: Modifications or additions to transmission-related facilities that are integrated with and support the Transmission Provider's overall Transmission System for the general benefit of all users of such Transmission System.

1.29 Non-Firm Point-To-Point Transmission Service: Point-To-Point Transmission Service under the Tariff that is reserved and scheduled on an as-available basis and is subject to Curtailment or Interruption as set forth in Section 14.7 under Part II of this Tariff. Non-Firm Point-To-Point Transmission Service is available on a stand-alone basis for periods ranging from one hour to one month.

1.30 Non-Firm Sale: An energy sale for which receipt or delivery may be interrupted for any reason or no reason, without liability on the part of either the buyer or seller.

1.31 Non-Variable Energy Resource: Non-Variable Energy Resource is a device for the production of electricity that is not a Variable Energy Resource.

1.32 Open Access Same-Time Information System (OASIS): The information system and standards of conduct contained in Part 37 of the Commission's regulations and all additional requirements implemented by subsequent Commission orders dealing with OASIS.

1.33 Part I: Tariff Definitions and Common Service Provisions contained in Sections 2 through 12.

1.34 Part II: Tariff Sections 13 through 27 pertaining to Point-To-Point Transmission Service in conjunction with the applicable Common Service Provisions of Part I and appropriate Schedules and Attachments.

1.35 Part III: Tariff Sections 28 through 35 pertaining to Network Integration Transmission Service in conjunction with the applicable Common Service Provisions of Part I and appropriate Schedules and Attachments.

1.35A Part IV: Tariff Sections 36 through 40 pertaining to Balancing Authority Ancillary Services in conjunction with the applicable Common Service Provisions of Part I and appropriate Schedules and Attachments.

1.36 Parties: The Transmission Provider and the Transmission Customer or Ancillary Service Customer receiving service under the Tariff.

1.37 Point(s) of Delivery: Point(s) on the Transmission Provider's Transmission System where capacity and energy transmitted by the Transmission Provider will be made available to the Receiving Party under Part II of the Tariff. The Point(s) of Delivery shall be specified in the Service Agreement for Long-Term Firm Point-To-Point Transmission Service.

1.38 Point(s) of Receipt: Point(s) of interconnection on the Transmission Provider's Transmission System where capacity and energy will be made available to the Transmission Provider by the Delivering Party under Part II of the Tariff. The Point(s) of Receipt shall be specified in the Service Agreement for Long-Term Firm Point-To-Point Transmission Service.

1.39 Point-To-Point Transmission Service: The reservation and transmission of capacity and energy on either a firm or non-firm basis from the Point(s) of Receipt to the Point(s) of Delivery under Part II of the Tariff.

1.40 Power Purchaser: The entity that is purchasing the capacity and energy to be transmitted under the Tariff.

1.41 Pre-Confirmed Application: An Application that commits the Eligible Customer to execute a Service Agreement upon receipt of notification that the Transmission Provider can provide the requested Transmission Service.

1.42 Receiving Party: The entity receiving the capacity and energy transmitted by the Transmission Provider to Point(s) of Delivery.

1.43 Regional Transmission Group (RTG): A voluntary organization of transmission owners, transmission users and other entities approved by the Commission to efficiently coordinate transmission planning (and expansion), operation and use on a regional (and interregional) basis.

1.44 Reserved Capacity: The maximum amount of capacity and energy that the Transmission Provider agrees to transmit for the Transmission Customer over the Transmission Provider's Transmission System between the Point(s) of Receipt and the Point(s) of Delivery under Part II of the Tariff. Reserved Capacity shall be expressed in terms of whole megawatts (500 kW per hour on the NSP System) on a sixty (60) minute interval (commencing on the clock hour) basis.

1.45 Service Agreement: The initial agreement and any amendments or supplements thereto entered into by the Transmission Customer or Ancillary Service Customer and the Transmission Provider for service under the Tariff.

1.46 Service Commencement Date: The date the Transmission Provider begins to provide service pursuant to the terms of an executed Service Agreement, or the date the Transmission Provider begins to provide service in accordance with Section 15.3, Section 29.1, or Section 37.5 under the Tariff.

1.47 Short-Term Firm Point-To-Point Transmission Service: Firm Point-To-Point Transmission Service under Part II of the Tariff with a term of less than one year.

1.48 System Condition: A specified condition on the Transmission Provider's system or on a neighboring system, such as a constrained transmission element or flowgate that may trigger Curtailment of Long-Term Firm Point-to-Point Transmission Service using the curtailment priority pursuant to Section 13.6. Such conditions must be identified in the Transmission Customer's Service Agreement.

1.49 System Impact Study: An assessment by the Transmission Provider of (i) the adequacy of the Transmission System to accommodate a request for either Firm Point-To-Point Transmission Service or Network Integration Transmission Service and (ii) whether any additional costs may be incurred in order to provide transmission service.

1.50 Third-Party Sale: Any sale for resale in interstate commerce to a Power Purchaser that is not designated as part of Network Load under the Network Integration Transmission Service that utilizes the Transmission Provider's transmission system.

1.51 Transmission Customer: Any Eligible Customer (or its Designated Agent) that (i) executes a Service Agreement, or (ii) requests in writing that the Transmission Provider file with the Commission, a proposed unexecuted Service Agreement to receive transmission service under Part II of the Tariff. This term is used in the Part I Common Service Provisions to include customers receiving transmission service under Part II and Part III of this Tariff.

1.52 Transmission Provider: Northern States Power Company (Minnesota) (or its intended successor-in-interest to its utility business) and Northern States Power Company (Wisconsin) (collectively "NSP Companies" or as "NSP"), Public Service Company of Colorado ("PSCo"), or Southwestern Public Service Company ("SPS"), each of which is an operating subsidiary of Xcel Energy Inc. ("Xcel"). NSP, PSCo, and SPS are public utilities that own, control, or operate facilities used for the transmission of electric energy in interstate commerce and provide transmission service under the Tariff. For Network Integration Transmission Service across the Lamar Tie between SPS and PSCo that implements transactions under the Xcel Energy Joint Operating Agreement, the Transmission Provider is both SPS and PSCo. For non-grandfathered Network Integration Transmission Service or Point to Point Service between SPS and PSCo across the Lamar Tie, the Transmission Provider is both the Southwest Power Pool, Inc. under the SPP Open Access Transmission Tariff (SPP OATT) and PSCo under the Tariff.

1.53 Transmission Provider's Monthly Transmission System Peak: The maximum firm usage of the Transmission Provider's Transmission System in a calendar month, including all Network Load and Firm Point-To-Point Transmission Service.

1.54 Transmission Service: Point-To-Point Transmission Service provided under Part II of the Tariff on a firm and non-firm basis.

1.55 Transmission System: The facilities owned, controlled or operated by the Transmission Provider that are used to provide transmission service under Part II, Part III and Part IV of the Tariff.

1.56 Variable Energy Resource: A Variable Energy Resource shall mean a device for the production of electricity that is characterized by an energy source that: (1) is renewable; (2) cannot be stored by the facility owner or operator; and (3) has variability that is beyond the control of the facility owner or operator.

2 Initial Allocation and Renewal Procedures

2.1 Initial Allocation of Available Transfer Capability: For purposes of determining whether existing capability on the Transmission Provider's Transmission System is adequate to accommodate a request for firm service under this Tariff, all Completed Applications for new firm transmission service received during the initial sixty (60) day period commencing with the effective date of the Tariff will be deemed to have been filed simultaneously. A lottery system conducted by an independent party shall be used to assign priorities for Completed Applications filed simultaneously. All Completed Applications for firm transmission service received after the initial sixty (60) day period shall be assigned a priority pursuant to Section 13.2.

2.2 Reservation Priority For Existing Firm Service Customers: Existing firm service customers (wholesale requirements and transmission-only, with a contract term of five years or more), have the right to continue to take transmission service from the Transmission Provider when the contract expires, rolls over or is renewed. This transmission reservation priority is independent of whether the existing customer continues to purchase capacity and energy from the Transmission Provider or elects to purchase capacity and energy from another supplier. If at the end of the contract term, the Transmission Provider's Transmission System cannot accommodate all of the requests for transmission service the existing firm service customer must agree to accept a contract term at least equal to a competing request by any new Eligible Customer and to pay the current just and reasonable rate, as approved by the Commission, for such service; provided that, the firm service customer shall have a right of first refusal at the end of such service only if the new contract is for five years or more. The existing firm service customer must provide notice to the Transmission Provider whether it will exercise its right of first refusal no less than one year prior to the expiration date of its transmission service agreement. This transmission reservation priority for existing firm service customers is an ongoing right that may be exercised at the end of all firm contract terms of five years or longer. Service agreements subject to a right of first refusal entered into prior to August 18, 2008 or associated with a transmission service request received prior to July 13, 2007, unless terminated, will become subject to the five year/one year requirement on the first rollover date after August 18, 2008; provided that, the one-year notice requirement shall apply to such service agreements with five years or more left in their terms as of August 18, 2008.

3 Ancillary Services

Ancillary Services are needed with transmission service to maintain reliability within and among the Control Areas affected by the transmission service. The Transmission Provider is required to provide (or offer to arrange with the local Control Area operator as discussed below), and the Transmission Customer is required to purchase, the following Ancillary Services: (i) Scheduling, System Control and Dispatch, and (ii) Reactive Supply and Voltage Control from Generation or Other Sources.

The Transmission Provider is required to offer to provide (or offer to arrange with the local Control Area operator as discussed below) the following Ancillary Services only to the Transmission Customer serving load within the Transmission Provider's Control Area: (i) Regulation and Frequency Response, (ii) Energy Imbalance, (iii) Operating Reserve - Spinning, (iv) Operating Reserve – Supplemental and (v) for service provided over the Public Service Company of Colorado system, Flex Reserve Service. The Transmission Customer serving load within the Transmission Provider's Control Area is required to acquire these Ancillary Services, whether from the Transmission Provider, from a third party, or by self-supply.

The Transmission Provider is required to provide (or offer to arrange with the local Control Area Operator as discussed below), to the extent it is physically feasible to do so from its resources or from resources available to it, Generator Imbalance Service when Transmission Service is used to deliver energy from a generator located within its Control Area. The Transmission Customer using Transmission Service to deliver energy from a generator located within the Transmission Provider’s Control Area is required to acquire Generator Imbalance Service, whether from the Transmission Provider, from a third party, or by self-supply.

The Transmission Customer may not decline the Transmission Provider's offer of Ancillary Services unless it demonstrates that it has acquired the Ancillary Services from another source. The Transmission Customer must list in its Application which Ancillary Services it will purchase from the Transmission Provider. A Transmission Customer that exceeds its firm reserved capacity at any Point of Receipt or Point of Delivery or an Eligible Customer that uses Transmission Service at a Point of Receipt or Point of Delivery that it has not reserved is required to pay for all of the Ancillary Services identified in this section that were provided by the Transmission Provider associated with the unreserved service. The Transmission Customer or Eligible Customer will pay for Ancillary Services based on the amount of transmission service it used but did not reserve.

If the Transmission Provider is a public utility providing transmission service but is not a Control Area operator, it may be unable to provide some or all of the Ancillary Services. In this case, the Transmission Provider can fulfill its obligation to provide Ancillary Services by acting as the Transmission Customer's agent to secure these Ancillary Services from the Control Area operator. The Transmission Customer may elect to (i) have the Transmission Provider act as its agent, (ii) secure the Ancillary Services directly from the Control Area operator, or (iii) secure the Ancillary Services (discussed

in Schedules 3, 4, 5, 6, 16 (applicable to service over the Public Service Company of Colorado system), and 9) from a third party or by self-supply when technically feasible.

The Transmission Provider shall specify the rate treatment and all related terms and conditions in the event of an unauthorized use of Ancillary Services by the Transmission Customer. The specific Ancillary Services, prices and/or compensation methods are described on the Schedules that are attached to and made a part of the Tariff. Three principal requirements apply to discounts for Ancillary Services provided by the Transmission Provider in conjunction with its provision of transmission service as follows:

(1) any offer of a discount made by the Transmission Provider must be announced to all Eligible Customers solely by posting on the OASIS, (2) any customer-initiated requests for discounts (including requests for use by one's wholesale merchant or an Affiliate's use) must occur solely by posting on the OASIS, and (3) once a discount is negotiated, details must be immediately posted on the OASIS. A discount agreed upon for an Ancillary Service must be offered for the same period to all Eligible Customers on the Transmission Provider's system.

Transmission Provider shall credit any Schedule 4 or Schedule 9 revenues in excess of incremental costs on an hourly basis. Penalty revenues received from offending customers each hour shall be credited to all non-offending customers for that same hour in proportion to each non-offending customer’s usage of the transmission system in MW during that hour, including the Transmission Provider’s bundled load. Any credits shall be applied to customer’s bills in the next billing month.

Sections 3.1 through 3.8 below list the eight Ancillary Services.

3.1 **Scheduling, System Control and Dispatch Service**: The rates and/or methodology are described in Schedule 1.

3.2 **Reactive Supply and Voltage Control from Generation or Other Sources Service**: The rates and/or methodology are described in Schedule 2.

3.3 **Regulation and Frequency Response Service**: Where applicable the rates and/or methodology are described in Schedule 3 and Schedule 3A.

3.4 **Energy Imbalance Service**: Where applicable the rates and/or methodology are described in Schedule 4.

3.5 **Operating Reserve** - Spinning Reserve Service: Where applicable the rates and/or methodology are described in Schedule 5.

3.6 **Operating Reserve** - Supplemental Reserve Service: Where applicable the rates and/or methodology are described in Schedule 6.

3.7 **Flex Reserve Service** - Where applicable the rates and/or methodology are described in Schedule 16 for service provided over the Public Service Company of Colorado system.

3.8 **Generator Imbalance Service**: Where applicable the rates and/or methodology are described in Schedule 9.

4 Open Access Same-Time Information System

4.1 Terms and Conditions: Terms and conditions regarding Open Access Same-Time Information System and standards of conduct are set forth in 18 CFR § 37 of the Commission's regulations (Open Access Same-Time Information System and Standards of Conduct for Public Utilities), and 18 C.F.R. § 38 of the Commission's regulations (Business Practice Standards and Communication Protocols for Public Utilities). In the event available transfer capability as posted on the OASIS is insufficient to accommodate a request for firm transmission service, additional studies may be required as provided by this Tariff pursuant to Sections 19 and 32.

The Transmission Provider shall post on OASIS and its public website an electronic link to all rules, standards and practices that (i) relate to the terms and conditions of transmission service, (ii) are not subject to a North American Energy Standards Board (NAESB) copyright restriction, and (iii) are not otherwise included in this Tariff. The Transmission Provider shall post on OASIS and on its public website an electronic link to the NAESB website where any rules, standards and practices that are protected by copyright may be obtained. The Transmission Provider shall also post on OASIS and its public website an electronic link to a statement of the process by which the Transmission Provider shall add, delete or otherwise modify the rules, standards and practices that are not included in this tariff. Such process shall set forth the means by which the Transmission Provider shall provide reasonable advance notice to Transmission Customers and Eligible Customers of any such additions, deletions or modifications, the associated effective date, and any additional implementation procedures that the Transmission Provider deems appropriate.

4.2 NAESB WEQ Business Practice Standards

The current versions of the NAESB WEQ Business Practice Standards incorporated by reference into the Commission's regulations as specified in Part 38 of the Commission's regulations (18 CFR Part 38) are incorporated by reference into this tariff.[1]

[1] Please see the business practices posted on the PSCo OASIS site for additional information.

5 Local Furnishing Bonds Version: 0.0.0 Effective: 7/30/2010

5 Local Furnishing Bonds

5.1 Transmission Providers That Own Facilities Financed by Local Furnishing Bonds: This provision is applicable only to Transmission Providers that have financed facilities for the local furnishing of electric energy with tax-exempt bonds, as described in Section 142(f) of the Internal Revenue Code ("local furnishing bonds"). Notwithstanding any other provision of this Tariff, the Transmission Provider shall not be required to provide transmission service to any Eligible Customer pursuant to this Tariff if the provision of such transmission service would jeopardize the tax-exempt status of any local furnishing bond(s) used to finance the Transmission Provider's facilities that would be used in providing such transmission service.

5.2 Alternative Procedures for Requesting Transmission Service:

(i) If the Transmission Provider determines that the provision of transmission service requested by an Eligible Customer would jeopardize the tax-exempt status of any local furnishing bond(s) used to finance its facilities that would be used in providing such transmission service, it shall advise the Eligible Customer within thirty (30) days of receipt of the Completed Application.

(ii) If the Eligible Customer thereafter renews its request for the same transmission service referred to in (i) by tendering an application under Section 211 of the Federal Power Act, the Transmission Provider, within ten (10) days of receiving a copy of the Section 211 application, will waive its rights to a request for service under Section 213(a) of the Federal Power Act and to the issuance of a proposed order under Section 212(c) of the Federal Power Act. The Commission, upon receipt of the Transmission Provider's waiver of its rights to a request for service under Section 213(a) of the Federal Power Act and to the issuance of a proposed order under Section 212(c) of the Federal Power Act, shall issue an order under Section 211 of the Federal Power Act. Upon issuance of the order under Section 211 of the Federal Power Act, the Transmission Provider shall be required to provide the requested transmission service in accordance with the terms and conditions of this Tariff.

6 Reciprocity Version: 0.0.0 Effective: 7/30/2010

6 Reciprocity

A Transmission Customer receiving transmission service under this Tariff agrees to provide comparable transmission service that it is capable of providing to the Transmission Provider on similar terms and conditions over facilities used for the transmission of electric energy owned, controlled or operated by the Transmission Customer and over facilities used for the transmission of electric energy owned, controlled or operated by the Transmission Customer's corporate Affiliates. A Transmission Customer that is a member of, or takes transmission service from, a power pool, Regional Transmission Group, Regional Transmission Organization (RTO), Independent System Operator (ISO) or other transmission organization approved by the Commission for the operation of transmission facilities also agrees to provide comparable transmission service to the transmission owning members of such power pool and Regional Transmission Group, RTO, ISO or other transmission organization on similar terms and conditions over facilities used for the transmission of electric energy owned, controlled or operated by the Transmission Customer and over facilities used for the transmission of electric energy owned, controlled or operated by the Transmission Customer's corporate Affiliates. This reciprocity requirement applies not only to the Transmission Customer that obtains transmission service under the Tariff, but also to all parties to a transaction that involves the use of transmission service under the Tariff, including the power seller, buyer and any intermediary, such as a power marketer. This reciprocity requirement also applies to any Eligible Customer that owns, controls or operates transmission facilities that uses an intermediary, such as a power marketer, to request transmission service under the Tariff. If the Transmission Customer does not own, control or operate transmission facilities, it must include in its Application a sworn statement of one of its duly authorized officers or other representatives that the purpose of its Application is not to assist an Eligible Customer to avoid the requirements of this provision.

7 Billing and Payment Version: 0.0.0 Effective: 7/30/2010

7 Billing and Payment

7.1 Billing Procedure: Within a reasonable time after the first day of each month, the Transmission Provider shall submit an invoice to the Transmission Customer for the charges for all services furnished under the Tariff during the preceding month. The invoice shall be paid by the Transmission Customer within twenty (20) days of receipt. All payments shall be made in immediately available funds payable to the Transmission Provider, or by wire transfer to a bank named by the Transmission Provider.

7.2 Interest on Unpaid Balances: Interest on any unpaid amounts (including amounts placed in escrow) shall be calculated in accordance with the methodology specified for interest on refunds in the Commission's regulations at 18 CFR § 35.19a(a)(2)(iii). Interest on delinquent amounts shall be calculated from the due date of the bill to the date of payment. When payments are made by mail, bills shall be considered as having been paid on the date of receipt by the Transmission Provider.

7.3 Customer Default: In the event the Transmission Customer fails, for any reason other than a billing dispute as described below, to make payment to the Transmission Provider on or before the due date as described above, and such failure of payment is not corrected within thirty (30) calendar days after the Transmission Provider notifies the Transmission Customer to cure such failure, a default by the Transmission Customer shall be deemed to exist. Upon the occurrence of a default, the Transmission Provider may initiate a proceeding with the Commission to terminate service but shall not terminate service until the Commission so approves any such request. In the event of a billing dispute between the Transmission Provider and the Transmission Customer, the Transmission Provider will continue to provide service under the Service Agreement as long as the Transmission Customer (i) continues to make all payments not in dispute, and (ii) pays into an independent escrow account the portion of the invoice in dispute, pending resolution of such dispute. If the Transmission Customer fails to meet these two requirements for continuation of service, then the Transmission Provider may provide notice to the Transmission Customer of its intention to suspend service in sixty (60) days, in accordance with Commission policy.

8 Accounting for the Transmission Provider's Use of the Tariff

The Transmission Provider shall record the following amounts, as outlined below.

8.1 Transmission Revenues: Include in a separate operating revenue account or subaccount the revenues it receives from Transmission Service when making Third-Party Sales under Part II of the Tariff.

8.2 Study Costs and Revenues: Include in a separate transmission operating expense account or subaccount, costs properly chargeable to expense that are incurred to perform any System Impact Studies or Facilities Studies which the Transmission Provider conducts to determine if it must construct new transmission facilities or upgrades necessary for its own uses, including making Third-Party Sales under the Tariff; and include in a separate operating revenue account or subaccount the revenues received for System Impact Studies or Facilities Studies performed when such amounts are separately stated and identified in the Transmission Customer's billing under the Tariff.

9 Regulatory Filings Version: 0.0.0 Effective: 7/30/2010

9 Regulatory Filings

Nothing contained in the Tariff or any Service Agreement shall be construed as affecting in any way the right of the Transmission Provider to unilaterally make application to the Commission for a change in rates, terms and conditions, charges, classification of service, Service Agreement, rule or regulation under Section 205 of the Federal Power Act and pursuant to the Commission's rules and regulations promulgated thereunder.

Nothing contained in the Tariff or any Service Agreement shall be construed as affecting in any way the ability of any Party receiving service under the Tariff to exercise its rights under the Federal Power Act and pursuant to the Commission's rules and regulations promulgated thereunder.

10 Force Majeure and Indemnification Version: 0.0.0 Effective: 7/30/2010

10 Force Majeure and Indemnification

10.1 Force Majeure: An event of Force Majeure means any act of God, labor disturbance, act of the public enemy, war, insurrection, riot, fire, storm or flood, explosion, breakage or accident to machinery or equipment, any Curtailment, order, regulation or restriction imposed by governmental military or lawfully established civilian authorities, or any other cause beyond a Party's control. A Force Majeure event does not include an act of negligence or intentional wrongdoing. Neither the Transmission Provider nor the Transmission Customer will be considered in default as to any obligation under this Tariff if prevented from fulfilling the obligation due to an event of Force Majeure. However, a Party whose performance under this Tariff is hindered by an event of Force Majeure shall make all reasonable efforts to perform its obligations under this Tariff.

10.2 Indemnification: The Transmission Customer shall at all times indemnify, defend, and save the Transmission Provider harmless from, any and all damages, losses, claims, including claims and actions relating to injury to or death of any person or damage to property, demands, suits, recoveries, costs and expenses, court costs, attorney fees and all other obligations by or to third parties, arising out of or resulting from the Transmission Provider's performance of its obligations under this Tariff on behalf of the Transmission Customer, except in cases of negligence or intentional wrongdoing by the Transmission Provider.

11 Creditworthiness Version: 0.0.0 Effective: 7/30/2010

11 Creditworthiness

The Transmission Provider will specify its Creditworthiness procedures in Attachment Q.

12 Dispute Resolution Procedures

12.1 Internal Dispute Resolution Procedures: Any dispute between a Transmission Customer and the Transmission Provider involving transmission service under the Tariff (excluding applications for rate changes or other changes to the Tariff, or to any Service Agreement entered into under the Tariff, which shall be presented directly to the Commission for resolution), including disputes regarding the Transmission Planning Process under Attachment R, shall be referred to a designated senior representative of the Transmission Provider and a senior representative of the Transmission Customer for resolution on an informal basis as promptly as practicable. In the event the designated representatives are unable to resolve the dispute within thirty (30) days, or such other period as the Parties may agree upon, by mutual agreement, such dispute may be submitted to mediation or arbitration and resolved in accordance with the mediation or arbitration procedures set forth below.

12.2 Mediation Procedures: Any dispute as to a matter under the Tariff, including disputes regarding the Transmission Planning Process under Attachment R, may be referred to non-binding mediation subsequent to informal dispute resolution under the procedures set forth in section 12.1 above. Either party to the dispute may request mediation. Any mediation initiated under the Tariff shall be facilitated by a single neutral mediator appointed by the Parties. If the Parties fail to agree upon a mediator within ten (10) calendar days of the referral of the dispute to mediation, the mediator shall be selected through the Commercial Mediation Procedures of the American Arbitration Association. In any case, the mediator shall be knowledgeable in electric utility matters, including electric transmission and bulk power issues, and shall not have any current or past substantial business or financial relationships with any party to the mediation (except as a mediator or arbitrator in a prior mediation or arbitration). The mediator shall provide each of the Parties an opportunity to be heard and, except as otherwise provided herein, shall generally conduct the mediation in accordance with the Commercial Mediation Procedures of the American Arbitration Association.

Unless otherwise agreed to by the Parties, the Mediation shall be held in the headquarters city of the relevant Xcel Energy Operating Company.

In the event the Parties and Mediator are unable to resolve the dispute within ninety (90) days, or such other period as the Parties may agree upon, by mutual agreement, such dispute may be submitted to arbitration and resolved in accordance with the arbitration procedures set forth below.

12.3 External Arbitration Procedures: Any arbitration initiated under the Tariff, including disputes regarding the Transmission Planning Process under Attachment R, shall be conducted before a single neutral arbitrator appointed by the Parties. If the Parties fail to agree upon a single arbitrator within ten (10) days of the referral of the dispute to arbitration, each Party shall choose one arbitrator who shall sit on a three-member arbitration panel. The two arbitrators

so chosen shall within twenty (20) days select a third arbitrator to chair the arbitration panel. In either case, the arbitrators shall be knowledgeable in electric utility matters, including electric transmission and bulk power issues, and shall not have any current or past substantial business or financial relationships with any party to the arbitration (except as a mediator or arbitrator in a prior mediation or arbitration). The arbitrator(s) shall provide each of the Parties an opportunity to be heard and, except as otherwise provided herein, shall generally conduct the arbitration in accordance with the Commercial Arbitration Rules of the American Arbitration Association and any applicable Commission regulations or Regional Transmission Group rules.

12.4 **Arbitration Decisions:** Unless otherwise agreed, the arbitrator(s) shall render a decision within ninety (90) days of appointment and shall notify the Parties in writing of such decision and the reasons therefor. The arbitrator(s) shall be authorized only to interpret and apply the provisions of the Tariff and any Service Agreement entered into under the Tariff and shall have no power to modify or change any of the above in any manner. The decision of the arbitrator(s) shall be final and binding upon the Parties, and judgment on the award may be entered in any court having jurisdiction. The decision of the arbitrator(s) may be appealed solely on the grounds that the conduct of the arbitrator(s), or the decision itself, violated the standards set forth in the Federal Arbitration Act and/or the Administrative Dispute Resolution Act. The final decision of the arbitrator must also be filed with the Commission if it affects jurisdictional rates, terms and conditions of service or facilities.

12.5 **Costs:** Each Party shall be responsible for its own costs incurred during the mediation or arbitration process and for the following costs, if applicable:

(A) the cost of the arbitrator chosen by the Party to sit on the three member panel and one half of the cost of the third arbitrator chosen; or

(B) one half the cost of the single arbitrator jointly chosen by the Parties.

12.6 **Rights Under The Federal Power Act:** Nothing in this section shall restrict the rights of any party to file a Complaint with the Commission under relevant provisions of the Federal Power Act.

II. POINT-TO-POINT TRANSMISSION SERVICE

Preamble

The Transmission Provider will provide Firm and Non-Firm Point-To-Point Transmission Service pursuant to the applicable terms and conditions of this Tariff unless such transmission service is available under the Open-Access Transmission Tariff of the Southwest Power Pool Transmission Providers. Point-To-Point Transmission Service is for the receipt of capacity and energy at designated Point(s) of Receipt and the transfer of such capacity and energy to designated Point(s) of Delivery.

13 Nature of Firm Point-to-Point Service

13.1 Term: The minimum term of Firm Point-To-Point Transmission Service shall be one day and the maximum term shall be specified in the Service Agreement.

13.2 Reservation Priority:

(i) Long-Term Firm Point-To-Point Transmission Service shall be available on a first-come, first-served basis, i.e., in the chronological sequence in which each Transmission Customer has requested service.

(ii) Reservations for Short-Term Firm Point-To-Point Transmission Service will be conditional based upon the length of the requested transaction or reservation. However, Pre-Confirmed Applications for Short-Term Point-to-Point Transmission Service will receive priority over earlier-submitted requests that are not Pre-Confirmed and that have equal or shorter duration. Among requests or reservations with the same duration and, as relevant, pre-confirmation status (pre-confirmed, confirmed, or not confirmed), priority will be given to an Eligible Customer's request or reservation that offers the highest price, followed by the date and time of the request or reservation.

(iii) If the Transmission System becomes oversubscribed, requests for service may preempt competing reservations up to the following conditional reservation deadlines: one day before the commencement of daily service, one week before the commencement of weekly service, and one month before the commencement of monthly service. Before the conditional reservation deadline, if available transfer capability is insufficient to satisfy all requests and reservations, an Eligible Customer with a reservation for shorter term service or equal duration service and lower price has the right of first refusal to match any longer term request or equal duration service with a higher price before losing its reservation priority. A longer term competing request for Short-Term Firm Point-To-Point Transmission Service will be granted if the Eligible Customer with the right of first refusal does not agree to match the competing request within 24 hours (or earlier if necessary to comply with the scheduling deadlines provided in section 13.8) from being notified by the Transmission Provider of a longer-term competing request for Short-Term Firm Point-To-Point Transmission Service. When a longer duration request preempts multiple shorter duration reservations, the shorter duration reservations shall have simultaneous opportunities to exercise the right of first refusal. Duration, price and time of response will be used to determine the order by which the multiple shorter duration reservations will be able to exercise the right of first refusal. After the conditional reservation deadline, service will commence pursuant to the terms of Part II of the Tariff.

(iv) Firm Point-To-Point Transmission Service will always have a reservation priority over Non-Firm Point-To-Point Transmission Service under the Tariff. All Long-Term Firm Point-To-Point Transmission Service will have equal reservation priority with Native Load Customers and Network Customers. Reservation priorities for existing firm service customers are provided in Section 2.2.

13.3 Use of Firm Transmission Service by the Transmission Provider: The Transmission Provider will be subject to the rates, terms and conditions of Part II of the Tariff when making Third-Party Sales under (i) agreements executed on or after July 9, 1996 or (ii) agreements executed prior to the aforementioned date that the Commission requires to be unbundled, by the date specified by the Commission. The Transmission Provider will maintain separate accounting, pursuant to Section 8, for any use of the Point-To-Point Transmission Service to make Third-Party Sales.

13.4 Service Agreements: The Transmission Provider shall offer a standard form Firm Point-To-Point Transmission Service Agreement (Attachment A-2) to an Eligible Customer when it submits a Completed Application for Long-Term Firm Point-To-Point Transmission Service. The Transmission Provider shall offer a standard form Firm Point-To-Point Transmission Service Agreement (Attachment A-1) to an Eligible Customer when it first submits a Completed Application for Short-Term Firm Point-To-Point Transmission Service pursuant to the Tariff. Executed Service Agreements that contain the information required under the Tariff shall be filed with the Commission in compliance with applicable Commission regulations. An Eligible Customer that uses Transmission Service at a Point of Receipt or Point of Delivery that it has not reserved and that has not executed a Service Agreement will be deemed, for purposes of assessing any appropriate charges and penalties, to have executed the appropriate Service Agreement. The Service Agreement shall, when applicable, specify any conditional curtailment options selected by the Transmission Customer. Where the Service Agreement contains conditional curtailment options and is subject to a biennial reassessment as described in Section 15.4, the Transmission Provider shall provide the Transmission Customer notice of any changes to the curtailment conditions no less than 90 days prior to the date for imposition of new curtailment conditions. Concurrent with such notice, the Transmission Provider shall provide the Transmission Customer with the reassessment study and a narrative description of the study, including the reasons for changes to the number of hours per year or System Conditions under which conditional curtailment may occur.

13.5 Transmission Customer Obligations for Facility Additions or Redispatch Costs: In cases where the Transmission Provider determines that the Transmission System is not capable of providing Firm Point-To-Point Transmission Service without (1) degrading or impairing the reliability of service to Native Load Customers, Network Customers and other Transmission Customers taking Firm Point-To-Point Transmission Service, or (2) interfering with the Transmission Provider's ability to meet prior firm contractual commitments to others, the Transmission Provider will be obligated to expand or upgrade its Transmission System pursuant to the terms of Section 15.4. The

Transmission Customer must agree to compensate the Transmission Provider for any necessary transmission facility additions pursuant to the terms of Section 27. To the extent the Transmission Provider can relieve any system constraint by redispatching the Transmission Provider's resources, it shall do so, provided that the Eligible Customer agrees to compensate the Transmission Provider pursuant to the terms of Section 27 and agrees to either (i) compensate the Transmission Provider for any necessary transmission facility additions or (ii) accept the service subject to a biennial reassessment by the Transmission Provider of redispatch requirements as described in Section 15.4. Any redispatch, Network Upgrade or Direct Assignment Facilities costs to be charged to the Transmission Customer on an incremental basis under the Tariff will be specified in the Service Agreement prior to initiating service.

13.6 Curtailment of Firm Transmission Service: In the event that a Curtailment on the Transmission Provider's Transmission System, or a portion thereof, is required to maintain reliable operation of such system and the system directly and indirectly interconnected with Transmission Provider’s Transmission System, Curtailments will be made on a non-discriminatory basis to the transaction(s) that effectively relieve the constraint. Transmission Provider may elect to implement such Curtailments pursuant to the transmission loading relief procedures specified in Attachment J. If multiple transactions require Curtailment, to the extent practicable and consistent with Good Utility Practice, the Transmission Provider will curtail service to Network Customers and Transmission Customers taking Firm Point-To-Point Transmission Service on a basis comparable to the curtailment of service to the Transmission Provider's Native Load Customers. All Curtailments will be made on a non-discriminatory basis, however, Non-Firm Point-To-Point Transmission Service shall be subordinate to Firm Transmission Service. Long-Term Firm Point-to-Point Service subject to conditions described in Section 15.4 shall be curtailed with secondary service in cases where the conditions apply, but otherwise will be curtailed on a pro rata basis with other Firm Transmission Service. When the Transmission Provider determines that an electrical emergency exists on its Transmission System and implements emergency procedures to Curtail Firm Transmission Service, the Transmission Customer shall make the required reductions upon request of the Transmission Provider. However, the Transmission Provider reserves the right to Curtail, in whole or in part, any Firm Transmission Service provided under the Tariff when, in the Transmission Provider's sole discretion, an emergency or other unforeseen condition impairs or degrades the reliability of its Transmission System. The Transmission Provider will notify all affected Transmission Customers in a timely manner of any scheduled Curtailments.

13.7 Classification of Firm Transmission Service:

(a) The Transmission Customer taking Firm Point-To-Point Transmission Service may (1) change its Receipt and Delivery Points to obtain service on a non-firm basis consistent with the terms of Section 22.1 or (2) request a modification of the Points of Receipt or Delivery on a firm basis pursuant to the terms of Section 22.2.

(b) The Transmission Customer may purchase transmission service to make sales of capacity and energy from multiple generating units that are on the Transmission Provider's Transmission System. For such a purchase of transmission service, the resources will be designated as multiple Points of Receipt, unless the multiple generating units are at the same generating plant in which case the units would be treated as a single Point of Receipt.

(c) The Transmission Provider shall provide firm deliveries of capacity and energy from the Point(s) of Receipt to the Point(s) of Delivery. Each Point of Receipt at which firm transmission capacity is reserved by the Transmission Customer shall be set forth in the Firm Point-To-Point Service Agreement for Long-Term Firm Transmission Service along with a corresponding capacity reservation associated with each Point of Receipt. Points of Receipt and corresponding capacity reservations shall be as mutually agreed upon by the Parties for Short-Term Firm Transmission. Each Point of Delivery at which firm transfer capability is reserved by the Transmission Customer shall be set forth in the Firm Point-To-Point Service Agreement for Long-Term Firm Transmission Service along with a corresponding capacity reservation associated with each Point of Delivery. Points of Delivery and corresponding capacity reservations shall be as mutually agreed upon by the Parties for Short-Term Firm Transmission. The greater of either (1) the sum of the capacity reservations at the Point(s) of Receipt, or (2) the sum of the capacity reservations at the Point(s) of Delivery shall be the Transmission Customer's Reserved Capacity. The Transmission Customer will be billed for its Reserved Capacity under the terms of Schedule 7. The Transmission Customer may not exceed its firm capacity reserved at each Point of Receipt and each Point of Delivery except as otherwise specified in Section 22. The Transmission Provider shall specify the rate treatment and all related terms and conditions applicable in the event that a Transmission Customer (including Third-Party Sales by the Transmission Provider) exceeds its firm reserved capacity at any Point of Receipt or Point of Delivery or uses Transmission Service at a Point of Receipt or Point of Delivery that it has not reserved.

13.8.1 Scheduling of Firm Point-To-Point Transmission Service on the PSCo System: Schedules for the Transmission Customer's Firm Point-To-Point Transmission Service must be submitted to the Transmission Provider no later than 10:00 a.m. of the day prior to commencement of such service provided that Schedules for Sundays, Mondays, and holidays should be delivered by 10:00 a.m. on Friday or the regular business day immediately preceding. Schedules submitted after 10:00 a.m. will be accommodated, if practicable. Hour-to-hour and intra-hour (four intervals consisting of fifteen minute schedules) schedules of any capacity and energy that is to be delivered must be stated in increments of 1,000 kW per hour. Transmission Customers within the Transmission Provider's service area with multiple requests for Transmission Service at a Point of Receipt, each of which is under 1,000 kW per hour, may consolidate their service requests at a common point of receipt into units of 1,000 kW per hour for scheduling and billing purposes. Scheduling

changes will be permitted up to twenty (20) minutes before the start of the next scheduling interval provided that the Delivering Party and Receiving Party also agree to the schedule modification. The Transmission Provider will furnish to the Delivering Party's system operator, hour-to-hour and intra-hour schedules equal to those furnished by the Receiving Party (unless reduced for losses) and shall deliver the capacity and energy provided by such schedules. Should the Transmission Customer, Delivering Party or Receiving Party revise or terminate any schedule, such party shall immediately notify the Transmission Provider, and the Transmission Provider shall have the right to adjust accordingly the schedule for capacity and energy to be received and to be delivered.

13.8.2 Scheduling of Firm Point-To-Point Transmission Service on the NSP and SPS Systems: Schedules for the Transmission Customer's Firm Point-To-Point Transmission Service must be submitted to the Transmission Provider no later than 10:00 a.m. of the day prior to commencement of such service. Schedules submitted after 10:00 a.m. will be accommodated, if practicable. Hour-to-hour schedules of any capacity and energy that is to be delivered must be stated in increments of 1000 kW per hour (500 kW per hour on the NSP System). Transmission Customers within the Transmission Provider's service area with multiple requests for Transmission Service at a Point of Receipt, each of which is under 1000 kW per hour (500 kW per hour on the NSP System), may consolidate their service requests at a common point of receipt into units of 1000 kW per hour (500 kW per hour on the NSP System) for scheduling and billing purposes. Scheduling changes will be permitted up to twenty (20) minutes before the start of the next clock hour provided that the Delivering Party and Receiving Party also agree to the schedule modification. The Transmission Provider will furnish to the Delivering Party's system operator, hour-to-hour schedules equal to those furnished by the Receiving Party (unless reduced for losses) and shall deliver the capacity and energy provided by such schedules. Should the Transmission Customer, Delivering Party or Receiving Party revise or terminate any schedule, such party shall immediately notify the Transmission Provider, and the Transmission Provider shall have the right to adjust accordingly the schedule for capacity and energy to be received and to be delivered.

14 Nature of Non-Firm Point-to-Point Transmission Service Version: 0.2.0 Effective: 1/13/2014

14 Nature of Non-Firm Point-to-Point Service

14.1 **Term: Non-Firm Point-To-Point** Transmission Service will be available for periods ranging from one (1) hour to one (1) month. However, a Purchaser of Non-Firm Point-To-Point Transmission Service will be entitled to reserve a sequential term of service (such as a sequential monthly term without having to wait for the initial term to expire before requesting another monthly term) so that the total time period for which the reservation applies is greater than one month, subject to the requirements of Section 18.3.

14.2 **Reservation Priority:** Non-Firm Point-To-Point Transmission Service shall be available from transfer capability in excess of that needed for reliable service to Native Load Customers, Network Customers and other Transmission Customers taking Long-Term and Short-Term Firm Point-To-Point Transmission Service. A higher priority will be assigned first to requests or reservations with a longer duration of service and second to Pre-Confirmed Applications. In the event the Transmission System is constrained, competing requests of the same Pre-Confirmation status and equal duration will be prioritized based on the highest price offered by the Eligible Customer for the Transmission Service. Eligible Customers that have already reserved shorter term service have the right of first refusal to match any longer term request before being preempted. A longer term competing request for Non-Firm Point-To-Point Transmission Service will be granted if the Eligible Customer with the right of first refusal does not agree to match the competing request: (a) immediately for hourly Non-Firm Point-To-Point Transmission Service after notification by the Transmission Provider; and, (b) within 24 hours (or earlier if necessary to comply with the scheduling deadlines provided in section 14.6) for Non-Firm Point-To-Point Transmission Service other than hourly transactions after notification by the Transmission Provider. Transmission service for Network Customers from resources other than designated Network Resources will have a higher priority than any Non-Firm Point-To-Point Transmission Service. Non-Firm Point-To-Point Transmission Service over secondary Point(s) of Receipt and Point(s) of Delivery will have the lowest reservation priority under the Tariff.

14.3 **Use of Non-Firm Point-To-Point Transmission Service by the Transmission Provider:** The Transmission Provider will be subject to the rates, terms and conditions of Part II of the Tariff when making Third-Party Sales under (i) agreements executed on or after July 9, 1996 or (ii) agreements executed prior to the aforementioned date that the Commission requires to be unbundled, by the date specified by the Commission. The Transmission Provider will maintain separate accounting, pursuant to Section 8, for any use of Non-Firm Point-To-Point Transmission Service to make Third-Party Sales.

14.4 Service Agreements: The Transmission Provider shall offer a standard form Non-Firm Point-To-Point Transmission Service Agreement (Attachment B) to an Eligible Customer when it first submits a Completed Application for Non-Firm Point-To-Point Transmission Service pursuant to the Tariff. Executed Service Agreements that contain the information required under the Tariff shall be filed with the Commission in compliance with applicable Commission regulations.

14.5 Classification of Non-Firm Point-To-Point Transmission Service: Non-Firm Point-To-Point Transmission Service shall be offered under terms and conditions contained in Part II of the Tariff. The Transmission Provider undertakes no obligation under the Tariff to plan its Transmission System in order to have sufficient capacity for Non-Firm Point-To-Point Transmission Service. Parties requesting Non-Firm Point-To-Point Transmission Service for the transmission of firm power do so with the full realization that such service is subject to availability and to Curtailment or Interruption under the terms of the Tariff. The Transmission Provider shall specify the rate treatment and all related terms and conditions applicable in the event that a Transmission Customer (including Third-Party Sales by the Transmission Provider) exceeds its non-firm capacity reservation. Non-Firm Point-To-Point Transmission Service shall include transmission of energy on an hourly basis and transmission of scheduled short-term capacity and energy on a daily, weekly or monthly basis, but not to exceed one month's reservation for any one Application, under Schedule 8.

14.6.1 Scheduling of Non-Firm Point-To-Point Transmission Service on the PSCo System: Schedules for Non-Firm Point-To-Point Transmission Service must be submitted to the Transmission Provider no later than 2:00 p.m. of the day prior to commencement of such service. Schedules submitted after 2:00 p.m. will be accommodated, if practicable. Hour-to-hour and intra-hour (four intervals consisting of fifteen minute schedules) schedules of energy that is to be delivered must be stated in increments of 1,000 kW per hour. Transmission Customers within the Transmission Provider's service area with multiple requests for Transmission Service at a Point of Receipt, each of which is under 1,000 kW per hour, may consolidate their schedules at a common Point of Receipt into units of 1,000 kW per hour. Scheduling changes will be permitted twenty (20) minutes before the start of the next scheduling interval provided that the Delivering Party and Receiving Party also agree to the schedule modification. The Transmission Provider will furnish to the Delivering Party's system operator, hour-to-hour and intra-hour schedules equal to those furnished by the Receiving Party (unless reduced for losses) and shall deliver the capacity and energy provided by such schedules. Should the Transmission Customer, Delivering Party or Receiving Party revise or terminate any schedule, such party shall immediately notify the Transmission Provider, and the Transmission Provider shall have the right to adjust accordingly the schedule for capacity and energy to be received and to be delivered.

14.6.2 Scheduling of Non-Firm Point-To-Point Transmission Service on the NSP and SPS Systems: Schedules for Non-Firm Point-To-Point Transmission Service must be submitted to the Transmission Provider no later than 2:00 p.m.

of the day prior to commencement of such service. Schedules submitted after 2:00 p.m. will be accommodated, if practicable. Hour-to-hour schedules of energy that is to be delivered must be stated in increments of 1000 kW per hour (500 kW per hour on the NSP System). Transmission Customers within the Transmission Provider's service area with multiple requests for Transmission Service at a Point of Receipt, each of which is under 1000 kW per hour (500 kW per hour on the NSP System), may consolidate their schedules at a common Point of Receipt into units of 1000 kW per hour (500 kW on the NSP System). Scheduling changes will be permitted up to twenty (20) minutes before the start of the next clock hour provided that the Delivering Party and Receiving Party also agree to the schedule modification. The Transmission Provider will furnish to the Delivering Party's system operator, hour-to-hour schedules equal to those furnished by the Receiving Party (unless reduced for losses) and shall deliver the capacity and energy provided by such schedules. Should the Transmission Customer, Delivering Party or Receiving Party revise or terminate any schedule, such party shall immediately notify the Transmission Provider, and the Transmission Provider shall have the right to adjust accordingly the schedule for capacity and energy to be received and to be delivered.

14.7 Curtailment or Interruption of Service: The Transmission Provider reserves the right to Curtail, in whole or in part, Non-Firm Point-To-Point Transmission Service provided under the Tariff for reliability reasons when an emergency or other unforeseen condition threatens to impair or degrade the reliability of its Transmission System or the systems directly or indirectly interconnected with Transmission Provider’s Transmission System. Transmission Provider may elect to implement such Curtailments pursuant to the transmission loading relief procedures specified in Attachment J. The Transmission Provider reserves the right to Interrupt, in whole or in part, Non-Firm Point-To-Point Transmission Service provided under the Tariff for economic reasons in order to accommodate (1) a request for Firm Transmission Service, (2) a request for Non-Firm Point-To-Point Transmission Service of greater duration, (3) a request for Non-Firm Point-To-Point Transmission Service of equal duration with a higher price, (4) transmission service for Network Customers from non-designated resources, or (5) transmission service for Firm Point-to-Point Transmission Service during conditional curtailment periods as described in Section 15.4. The Transmission Provider also will discontinue or reduce service to the Transmission Customer to the extent that deliveries for transmission are discontinued or reduced at the Point(s) of Receipt. Where required, Curtailments or Interruptions will be made on a non-discriminatory basis to the transaction(s) that effectively relieve the constraint, however, Non-Firm Point-To-Point Transmission Service shall be subordinate to Firm Transmission Service. If multiple transactions require Curtailment or Interruption, to the extent practicable and consistent with Good Utility Practice, Curtailments or Interruptions will be made to transactions of the shortest term (e.g., hourly non-firm transactions will be Curtailed or Interrupted before daily non-firm transactions and daily non-firm transactions will be Curtailed or Interrupted before weekly non-firm transactions). Transmission service for Network Customers from resources other than designated Network Resources will have a higher priority than any Non-Firm Point-To-Point Transmission

Service under the Tariff. Non-Firm Point-To-Point Transmission Service over secondary Point(s) of Receipt and Point(s) of Delivery will have a lower priority than any Non-Firm Point-To-Point Transmission Service under the Tariff. The Transmission Provider will provide advance notice of Curtailment or Interruption where such notice can be provided consistent with Good Utility Practice.

15 Service Availability Version: 0.2.0 Effective: 1/1/2014

15 Service Availability

15.1 General Conditions: The Transmission Provider will provide Firm and Non-Firm Point-To-Point Transmission Service over, on or across its Transmission System to any Transmission Customer that has met the requirements of Section 16.

15.2 Determination of Available Transfer Capability: A description of the Transmission Provider's specific methodology for assessing available transfer capability posted on the Transmission Provider's OASIS (Section 4) is contained in Attachment C of the Tariff. In the event sufficient transfer capability may not exist to accommodate a service request, the Transmission Provider will respond by performing a System Impact Study.

15.3 Initiating Service in the Absence of an Executed Service Agreement: If the Transmission Provider and the Transmission Customer requesting Firm or Non-Firm Point-To-Point Transmission Service cannot agree on all the terms and conditions of the Point-To-Point Service Agreement, the Transmission Provider shall file with the Commission, within thirty (30) days after the date the Transmission Customer provides written notification directing the Transmission Provider to file, an unexecuted Point-To-Point Service Agreement containing terms and conditions deemed appropriate by the Transmission Provider for such requested Transmission Service. The Transmission Provider shall commence providing Transmission Service subject to the Transmission Customer agreeing to (i) compensate the Transmission Provider at whatever rate the Commission ultimately determines to be just and reasonable, and (ii) comply with the terms and conditions of the Tariff including posting appropriate security deposits in accordance with the terms of Section 17.3.

15.4 Obligation to Provide Transmission Service that Requires Expansion or Modification of the Transmission System, Redispatch or Conditional Curtailment:

(a) If the Transmission Provider determines that it cannot accommodate a Completed Application for Firm Point-To-Point Transmission Service because of insufficient capability on its Transmission System, the Transmission Provider will use due diligence to expand or modify its Transmission System to provide the requested Firm Transmission Service, consistent with its planning obligations in Attachment R, provided the Transmission Customer agrees to compensate the Transmission Provider for such costs pursuant to the terms of Section 27. The Transmission Provider will conform to Good Utility Practice and its planning obligations in Attachment R, in determining the need for new facilities and in the design and construction of such facilities. The obligation applies only to those facilities that the Transmission Provider has the right to expand or modify.

(b) If the Transmission Provider determines that it cannot accommodate a Completed Application for Long-Term Firm Point-To-Point Transmission Service because of insufficient capability on its Transmission System, the Transmission Provider will use due diligence to provide redispatch from its own resources until (i) Network Upgrades are completed for the Transmission Customer, (ii) the Transmission Provider determines through a biennial reassessment that it can no longer reliably provide the redispatch, or (iii) the Transmission Customer terminates the service because of redispatch changes resulting from the reassessment. A Transmission Provider shall not unreasonably deny self-provided redispatch or redispatch arranged by the Transmission Customer from a third party resource.

(c) If the Transmission Provider determines that it cannot accommodate a Completed Application for Long-Term Firm Point-To-Point Transmission Service because of insufficient capability on its Transmission System, the Transmission Provider will offer the Firm Transmission Service with the condition that the Transmission Provider may curtail the service prior to the curtailment of other Firm Transmission Service for a specified number of hours per year or during System Condition(s). If the Transmission Customer accepts the service, the Transmission Provider will use due diligence to provide the service until (i) Network Upgrades are completed for the Transmission Customer, (ii) the Transmission Provider determines through a biennial reassessment that it can no longer reliably provide such service, or (iii) the Transmission Customer terminates the service because the reassessment increased the number of hours per year of conditional curtailment or changed the System Conditions.

15.5 **Deferral of Service:** The Transmission Provider may defer providing service until it completes construction of new transmission facilities or upgrades needed to provide Firm Point-To-Point Transmission Service whenever the Transmission Provider determines that providing the requested service would, without such new facilities or upgrades, impair or degrade reliability to any existing firm services.

15.6 **Other Transmission Service Schedules:** Eligible Customers receiving transmission service under other agreements on file with the Commission may continue to receive transmission service under those agreements until such time as those agreements may be modified by the Commission.

15.7 **Real Power Losses:** Real Power Losses are associated with all transmission service. The Transmission Provider is not obligated to provide Real Power Losses. The Transmission Customer is responsible for replacing losses associated with all transmission service as calculated by the Transmission Provider. The applicable Real Power Losses are as follows:

For Service on the NSP Transmission System: 2.4%

For Service on the PSCo System:

	Demand	Energy
Transmission System:	2.52%	1.87%
Distribution System – Primary Voltage:	2.28%	1.81%

For Service on the SPS System:

	Demand	Energy
Transmission System:	3.3370%	2.6493%
Distribution System – Primary Voltage:	10.0501%	7.1863%

The loss factors for Direct Assignment Facilities shall be determined on a case by case basis.

16 Transmission Customer Responsibilities Version: 0.0.0 Effective: 7/30/2010

16 Transmission Customer Responsibilities

16.1 Conditions Required of Transmission Customers: Point-To-Point Transmission Service shall be provided by the Transmission Provider only if the following conditions are satisfied by the Transmission Customer:

a. The Transmission Customer has pending a Completed Application for service;

b. The Transmission Customer meets the creditworthiness criteria set forth in Section 11;

c. The Transmission Customer will have arrangements in place for any other transmission service necessary to effect the delivery from the generating source to the Transmission Provider prior to the time service under Part II of the Tariff commences;

d. The Transmission Customer agrees to pay for any facilities constructed and chargeable to such Transmission Customer under Part II of the Tariff, whether or not the Transmission Customer takes service for the full term of its reservation;

e. The Transmission Customer provides the information required by the Transmission Provider's planning process established in Attachment R; and

f. The Transmission Customer has executed a Point-To-Point Service Agreement or has agreed to receive service pursuant to Section 15.3.

16.2 Transmission Customer Responsibility for Third-Party Arrangements: Any scheduling arrangements that may be required by other electric systems shall be the responsibility of the Transmission Customer requesting service. The Transmission Customer shall provide, unless waived by the Transmission Provider, notification to the Transmission Provider identifying such systems and authorizing them to schedule the capacity and energy to be transmitted by the Transmission Provider pursuant to Part II of the Tariff on behalf of the Receiving Party at the Point of Delivery or the Delivering Party at the Point of Receipt. However, the Transmission Provider will undertake reasonable efforts to assist the Transmission Customer in making such arrangements, including without limitation, providing any information or data required by such other electric system pursuant to Good Utility Practice.

17 Procedures for Arrange Firm Point-to-Point Transmission Service

17.1 Application: A request for Firm Point-To-Point Transmission Service for periods of one year or longer must contain a written Application to:

For Service by NSP:

Director, Transmission Tariff Management
Northern States Power Company
414 Nicollet Mall
Minneapolis, Minnesota 55401

For Service by PSCo or SPS:

Manager, West Control Center
Public Service Company of Colorado
P.O. Box 1078
Golden, Colorado 80402-1078

For service by any two or all three Transmission Providers, such request should be submitted to the Transmission Provider that is being requested to provide delivery of the power to the load or out of the Xcel System. Such written application must be submitted at least sixty (60) days in advance of the calendar month in which service is to commence. The Transmission Provider will consider requests for such firm service on shorter notice when feasible. Requests for firm service for periods of less than one year shall be subject to expedited procedures that shall be negotiated between the Parties within the time constraints provided in Section 17.5. All Firm Point-To-Point Transmission Service requests should be submitted by entering the information listed below on the Transmission Provider's OASIS.

17.2 Completed Application: A Completed Application shall provide all of the information included in 18 CFR § 2.20 including but not limited to the following:

(i) The identity, address, telephone number and facsimile number of the entity requesting service;

(ii) A statement that the entity requesting service is, or will be upon commencement of service, an Eligible Customer under the Tariff;

(iii) The location of the Point(s) of Receipt and Point(s) of Delivery and the identities of the Delivering Parties and the Receiving Parties;

(iv) The location of the generating facility(ies) supplying the capacity and energy and the location of the load ultimately served by the capacity and energy transmitted. The Transmission Provider will treat this information as confidential except to the extent that disclosure of this information is required by this Tariff, by regulatory or judicial order, for reliability purposes pursuant to Good Utility Practice or pursuant to RTG

transmission information sharing agreements. The Transmission Provider shall treat this information consistent with the standards of conduct contained in Part 37 of the Commission's regulations;

(v) A description of the supply characteristics of the capacity and energy to be delivered;

(vi) An estimate of the capacity and energy expected to be delivered to the Receiving Party;

(vii) The Service Commencement Date and the term of the requested Transmission Service; and

(viii) The transmission capacity requested for each Point of Receipt and each Point of Delivery on the Transmission Provider's Transmission System; customers may combine their requests for service in order to satisfy the minimum transmission capacity requirement.

(ix) A statement indicating that, if the Eligible Customer submits a Pre-Confirmed Application, the Eligible Customer will execute a Service Agreement upon receipt of notification that the Transmission Provider can provide the requested Transmission Service; and

(x) Any additional information required by the Transmission Provider’s planning process established in Attachment R.

The Transmission Provider shall treat this information consistent with the standards of conduct contained in Part 37 of the Commission's regulations.

17.3 **Deposit:** A Completed Application for Firm Point-To-Point Transmission Service also shall include a deposit of either one month's charge for Reserved Capacity or the full charge for Reserved Capacity for service requests of less than one month. If the Application is rejected by the Transmission Provider because it does not meet the conditions for service as set forth herein, or in the case of requests for service arising in connection with losing bidders in a Request For Proposals (RFP), said deposit shall be returned with interest less any reasonable costs incurred by the Transmission Provider in connection with the review of the losing bidder's Application. The deposit also will be returned with interest less any reasonable costs incurred by the Transmission Provider if the Transmission Provider is unable to complete new facilities needed to provide the service. If an Application is withdrawn or the Eligible Customer decides not to enter into a Service Agreement for Firm Point-To-Point Transmission Service, the deposit shall be refunded in full, with interest, less reasonable costs incurred by the Transmission Provider to the extent such costs have not already been recovered by the Transmission Provider from the Eligible Customer. The Transmission Provider will provide to the Eligible Customer a complete accounting of all costs deducted from the refunded deposit, which the Eligible Customer may contest if there is a dispute concerning the deducted costs. Deposits associated with construction of new facilities are subject to the provisions of Section 19. If a Service Agreement for

Firm Point-To-Point Transmission Service is executed, the deposit, with interest, will be returned to the Transmission Customer upon expiration or termination of the Service Agreement for Firm Point-To-Point Transmission Service. Applicable interest shall be computed in accordance with the Commission's regulations at 18 CFR § 35.19a(a)(2)(iii), and shall be calculated from the day the deposit check is credited to the Transmission Provider's account. Notwithstanding the foregoing, the Transmission Provider may, on a non-discriminatory basis, waive the requirement that a deposit accompany an Application where the Eligible Customer has established its creditworthiness pursuant to Section 11 and is not in default of its obligations as defined in Section 7.3 at the time of the Application. The Transmission Provider will bill the Eligible Customer for any reasonable costs incurred by the Transmission Provider in connection with its review of the Application. Such bill will contain a complete accounting of all costs included.

17.4 Notice of Deficient Application: If an Application fails to meet the requirements of the Tariff, the Transmission Provider shall notify the entity requesting service within fifteen (15) days of receipt of the reasons for such failure. The Transmission Provider will attempt to remedy minor deficiencies in the Application through informal communications with the Eligible Customer. If such efforts are unsuccessful, the Transmission Provider shall return the Application, along with any deposit, with interest. Upon receipt of a new or revised Application that fully complies with the requirements of Part II of the Tariff, the Eligible Customer shall be assigned a new priority consistent with the date of the new or revised Application.

17.5 Response to a Completed Application: Following receipt of a Completed Application for Firm Point-To-Point Transmission Service, the Transmission Provider shall make a determination of available transfer capability as required in Section 15.2. The Transmission Provider shall notify the Eligible Customer as soon as practicable, but not later than thirty (30) days after the date of receipt of a Completed Application either (i) if it will be able to provide service without performing a System Impact Study or (ii) if such a study is needed to evaluate the impact of the Application pursuant to Section 19.1. Responses by the Transmission Provider must be made as soon as practicable to all completed applications (including applications by its own merchant function) and the timing of such responses must be made on a non-discriminatory basis.

17.6 Execution of Service Agreement: Whenever the Transmission Provider determines that a System Impact Study is not required and that the service can be provided, it shall notify the Eligible Customer as soon as practicable but no later than thirty (30) days after receipt of the Completed Application. Where a System Impact Study is required, the provisions of Section 19 will govern the execution of a Service Agreement. Failure of an Eligible Customer to execute and return the Service Agreement or request the filing of an unexecuted service agreement pursuant to Section 15.3, within fifteen (15) days after it is tendered by the Transmission Provider will be deemed a withdrawal and termination of the Application and any deposit submitted shall be refunded with interest. Nothing herein limits the right of an Eligible Customer to file another Application after such withdrawal and termination.

17.7 Extensions for Commencement of Service: The Transmission Customer can obtain, subject to availability, up to five (5) one-year extensions for the commencement of service. The Transmission Customer may postpone service by paying a non-refundable annual reservation fee equal to one-month's charge for Firm Transmission Service for each year or fraction thereof within 15 days of notifying the Transmission Provider it intends to extend the commencement of service. If during any extension for the commencement of service an Eligible Customer submits a Completed Application for Firm Transmission Service, and such request can be satisfied only by releasing all or part of the Transmission Customer's Reserved Capacity, the original Reserved Capacity will be released unless the following condition is satisfied. Within thirty (30) days, the original Transmission Customer agrees to pay the Firm Point-To-Point transmission rate for its Reserved Capacity concurrent with the new Service Commencement Date. In the event the Transmission Customer elects to release the Reserved Capacity, the reservation fees or portions thereof previously paid will be forfeited.

18 Procedures for Arranging Non-Firm Point-to-Point Transmission Service

18.1 Application: Eligible Customers seeking Non-Firm Point-To-Point Transmission Service must submit a Completed Application to the Transmission Provider. Applications should be submitted by entering the information listed below on the Transmission Provider's OASIS. For service by any two, three, or all four operating companies, such request should be submitted to the company that is being requested to provide delivery of the power to the load or out of the Xcel System.

18.2 Completed Application: A Completed Application shall provide all of the information included in 18 CFR § 2.20 including but not limited to the following:

(i) The identity, address, telephone number and facsimile number of the entity requesting service;

(ii) A statement that the entity requesting service is, or will be upon commencement of service, an Eligible Customer under the Tariff;

(iii) The Point(s) of Receipt and the Point(s) of Delivery;

(iv) The maximum amount of capacity requested at each Point of Receipt and Point of Delivery; and

(v) The proposed dates and hours for initiating and terminating transmission service hereunder.

In addition to the information specified above, when required to properly evaluate system conditions, the Transmission Provider also may ask the Transmission Customer to provide the following:

(vi) The electrical location of the initial source of the power to be transmitted pursuant to the Transmission Customer's request for service; and

(vii) The electrical location of the ultimate load.

The Transmission Provider will treat this information in (vi) and (vii) as confidential at the request of the Transmission Customer except to the extent that disclosure of this information is required by this Tariff, by regulatory or judicial order, for reliability purposes pursuant to Good Utility Practice, or pursuant to RTG transmission information sharing agreements. The Transmission Provider shall treat this information consistent with the standards of conduct contained in Part 37 of the Commission’s regulations.

(viii) A statement indicating that, if the Eligible Customer submits a Pre-Confirmed Application, the Eligible Customer will execute a Service Agreement upon receipt of notification that the Transmission Provider can provide the requested Transmission Service.

18.3.1 Reservation of Non-Firm Point-To-Point Transmission Service on the PSCo System: Requests for monthly service shall be submitted no earlier than sixty (60) days before service is to commence; requests for weekly service shall be submitted no earlier than fourteen (14) days before service is to commence, requests for daily service shall be submitted no earlier than two (2) days before service is to commence, and requests for hourly service shall be submitted no earlier than 8:00 a.m. the day before service is to commence. Requests for service received later than 2:00 p.m. prior to the day service is scheduled to commence will be accommodated if practicable.

18.3.2 Reservation of Non-Firm Point-To-Point Transmission Service on the NSP and SPS Systems: Requests for monthly service shall be submitted no earlier than sixty (60) days before service is to commence; requests for weekly service shall be submitted no earlier than fourteen (14) days before service is to commence, requests for daily service shall be submitted no earlier than two (2) days before service is to commence, and requests for hourly service shall be submitted no earlier than 12:00 noon the day before service is to commence. Requests for service received later than 2:00 p.m. prior to the day service is scheduled to commence will be accommodated if practicable.

18.4 Determination of Available Transfer Capability: Following receipt of a tendered schedule the Transmission Provider will make a determination on a non-discriminatory basis of available transfer capability pursuant to Section 15.2. Such determination shall be made as soon as reasonably practicable after receipt, but not later than the following time periods for the following terms of service (i) thirty (30) minutes for hourly service, (ii) thirty (30) minutes for daily service, (iii) four (4) hours for weekly service, and (iv) two (2) days for monthly service.

19 Additional Study Procedures For Firm Point-to-Point Transmission Service Requests

19.1 Notice of Need for System Impact Study: After receiving a request for service, the Transmission Provider shall determine on a non-discriminatory basis whether a System Impact Study is needed. A description of the Transmission Provider's methodology for completing a System Impact Study is provided in Attachment D. If the Transmission Provider determines that a System Impact Study is necessary to accommodate the requested service, it shall so inform the Eligible Customer, as soon as practicable. Once informed, the Eligible Customer shall timely notify the Transmission Provider if it elects to have the Transmission Provider study redispatch or conditional curtailment as part of the System Impact Study. If notification is provided prior to tender of the System Impact Study Agreement, the Eligible Customer can avoid the costs associated with the study of these options. The Transmission Provider shall within thirty (30) days of receipt of a Completed Application, tender a System Impact Study Agreement pursuant to which the Eligible Customer shall agree to reimburse the Transmission Provider for performing the required System Impact Study. A form of System Impact Study Agreement is included as Attachment K. For a service request to remain a Completed Application, the Eligible Customer shall execute the System Impact Study Agreement and return it to the Transmission Provider within fifteen (15) days. If the Eligible Customer elects not to execute the System Impact Study Agreement, its application shall be deemed withdrawn and its deposit, pursuant to Section 17.3, shall be returned with interest.

19.2 System Impact Study Agreement and Cost Reimbursement:

(i) The System Impact Study Agreement will clearly specify the Transmission Provider's estimate of the actual cost, and time for completion of the System Impact Study. The charge shall not exceed the actual cost of the study. In performing the System Impact Study, the Transmission Provider shall rely, to the extent reasonably practicable, on existing transmission planning studies. The Eligible Customer will not be assessed a charge for such existing studies; however, the Eligible Customer will be responsible for charges associated with any modifications to existing planning studies that are reasonably necessary to evaluate the impact of the Eligible Customer's request for service on the Transmission System.

(ii) If in response to multiple Eligible Customers requesting service in relation to the same competitive solicitation, a single System Impact Study is sufficient for the Transmission Provider to accommodate the requests for service, the costs of that study shall be pro-rated among the Eligible Customers.

(iii) For System Impact Studies that the Transmission Provider conducts on its own behalf, the Transmission Provider shall record the cost of the System Impact Studies pursuant to Section 20.

19.3 System Impact Study Procedures: Upon receipt of an executed System Impact Study Agreement, the Transmission Provider will use due diligence to complete the required System Impact Study within a sixty (60) day period. The System Impact Study shall identify (1) any system constraints, identified with specificity by transmission element or flowgate, (2) redispatch options (when requested by an Eligible Customer) including an estimate of the cost of redispatch, (3) conditional curtailment options (when requested by an Eligible Customer) including the number of hours per year and the System Conditions during which conditional curtailment may occur, and (4) additional Direct Assignment Facilities or Network Upgrades required to provide the requested service. For customers requesting the study of redispatch options, the System Impact Study shall (1) identify all resources located within the Transmission Provider's Control Area that can significantly contribute toward relieving the system constraint and (2) provide a measurement of each resource's impact on the system constraint. If the Transmission Provider possesses information indicating that any resource outside its Control Area could relieve the constraint, it shall identify each such resource in the System Impact Study. In the event that the Transmission Provider is unable to complete the required System Impact Study within such time period, it shall so notify the Eligible Customer and provide an estimated completion date along with an explanation of the reasons why additional time is required to complete the required studies. A copy of the completed System Impact Study and related work papers shall be made available to the Eligible Customer as soon as the System Impact Study is complete. The Transmission Provider will use the same due diligence in completing the System Impact Study for an Eligible Customer as it uses when completing studies for itself. The Transmission Provider shall notify the Eligible Customer immediately upon completion of the System Impact Study if the Transmission System will be adequate to accommodate all or part of a request for service or that no costs are likely to be incurred for new transmission facilities or upgrades. In order for a request to remain a Completed Application, within fifteen (15) days of completion of the System Impact Study the Eligible Customer must execute a Service Agreement or request the filing of an unexecuted Service Agreement pursuant to Section 15.3, or the Application shall be deemed terminated and withdrawn.

19.4.1 Facilities Study Procedures: If a System Impact Study indicates that additions or upgrades to the Transmission System are needed to supply the Eligible Customer's service request, the Transmission Provider, within thirty (30) days of the completion of the System Impact Study, shall tender to the Eligible Customer a Facilities Study Agreement pursuant to which the Eligible Customer shall agree to reimburse the Transmission Provider for performing the required Facilities Study. A form of Facilities Study Agreement is included as Attachment L. For a service request to remain a Completed Application, the Eligible Customer shall execute the Facilities Study Agreement and return it to the Transmission Provider within fifteen (15) days. If the Eligible Customer elects not to execute the Facilities Study Agreement, its application shall be deemed withdrawn and its deposit, pursuant to Section 17.3, shall be returned with interest. Upon receipt of an executed Facilities Study Agreement, the Transmission Provider will use due diligence to complete the required Facilities

Study within a sixty (60) day period. If the Transmission Provider is unable to complete the Facilities Study in the allotted time period, the Transmission Provider shall notify the Transmission Customer and provide an estimate of the time needed to reach a final determination along with an explanation of the reasons that additional time is required to complete the study. When completed, the Facilities Study will include a good faith estimate of (i) the cost of Direct Assignment Facilities to be charged to the Transmission Customer, (ii) the Transmission Customer's appropriate share of the cost of any required Network Upgrades as determined pursuant to the provisions of Part II of the Tariff, and (iii) the time required to complete such construction and initiate the requested service. The Transmission Customer shall provide the Transmission Provider with a letter of credit or other reasonable form of security acceptable to the Transmission Provider equivalent to the costs of new facilities or upgrades consistent with commercial practices as established by the Uniform Commercial Code. The Transmission Customer shall have thirty (30) days to execute a Service Agreement or request the filing of an unexecuted Service Agreement and provide the required letter of credit or other form of security or the request will no longer be a Completed Application and shall be deemed terminated and withdrawn.

19.4.2 Clustered Transmission Service Requests

19.4.2.1 Cluster Identification:

At Transmission Provider's option, or if specifically requested by a Transmission Customer and found feasible by the Transmission Provider, Transmission Service Requests may be studied in clusters for the purpose of the Transmission Service System Impact Study and Facilities Studies.

Clustering shall be implemented on the basis of Queue Position. If Transmission Provider elects to study Transmission Service Requests using Clustering, all Transmission Service Requests which impact a common transmission path or region received within a period not to exceed sixty (60) Calendar Days, hereinafter referred to as the "Transmission Service Queue Cluster Window", shall be studied together without regard to the nature of the underlying Transmission Service, whether Firm Point-to-Point, Network Integration Transmission Service or service to serve Transmission Provider's native load.

Transmission Provider may, at its option, announce an "open season" by a posting on Transmission Provider's OASIS seeking transmission service requests affecting a common transmission path (or paths) or region to establish a Transmission Service Queue Cluster Window. The open season shall have a fixed time interval based on fixed opening and closing dates. Any changes to the established open season opening or closing dates shall be announced with a posting on Transmission Provider's OASIS at least ten (10) days in advance of the change.

All transmission service requests affecting the common transmission path(s) or region received after the announced Transmission Service Queue Cluster Window will be considered serially after the clustered System Impact Study and Facilities Study (if necessary).

19.4.2.2 System Impact Studies

Transmission Provider shall be allowed up to 60 days to complete a clustered System Impact Study. Each participating Transmission Customer will be charged an equal portion of the clustered System Impact Study cost regardless of the type or level of Transmission Service requested. Each participating Transmission Customer will be tendered a clustered System Impact Study Agreement for signature. The signed System Impact Study Agreement and the required deposit must be returned to Transmission Provider within 30 days or the Transmission Customer's transmission service request will be deemed withdrawn and removed from the clustered System Impact Study. If a participating Transmission Customer elects to opt out of a Transmission Provider-initiated clustered study prior to execution of a System Impact Study Agreement, such customer may request an individual study. If the Transmission Provider determines it is feasible to study the Transmission Customer’s Transmission Service Request individually, it shall tender an individual System Impact Study Agreement for signature, and the Transmission Customer shall retain its original queue position.

If a participating Transmission Customer elects to opt out of a cluster study after signing the System Impact Study Agreement, the Transmission Customer will be responsible for its share of any System Impact Study costs incurred before its departure and may submit a new Transmission Service Request for an individual study, if Transmission Provider determines that such request can be studied individually. The remaining customers in the cluster shall be responsible for a re-allocated share of all clustered study costs incurred after a Transmission Customer opts out of the cluster. The request of the Transmission Customer opting out shall be treated as a new request and placed at the end of the queue.

Clustered System Impact Studies shall be conducted in such a manner to provide the efficient implementation of the applicable regional transmission expansion plan in light of the Transmission System's capabilities at the time of each study.

After Transmission Provider completes the clustered System Impact Study, the results will be provided at the same time to all the participating Transmission Customers. The results will also be posted on Transmission Provider’s OASIS consistent with the Joint OATT.

19.4.2.3 Facilities Studies

If required and consistent with the Joint OATT, after completion of the clustered System Impact Study, the Transmission Provider will perform a clustered Facilities Study.

Transmission Provider shall be allowed up to 60 days to complete a clustered Facilities Study. Each participating Transmission Customer will be charged an equal portion of the clustered Facilities Study cost regardless of the type or level of Transmission Service requested.

Each participating Transmission Customer will be tendered a clustered Facilities Study Agreement for signature. The signed Facilities Study Agreement and the required deposit must be returned to Transmission Provider within 30 days or the Transmission Customer's transmission service request will be deemed withdrawn and removed from the clustered Facilities Study.

After Transmission Provider completes the clustered Facilities Study, the results will be provided at the same time to all the Transmission Customers who signed the Facilities Study Agreement. The results will also be posted on Transmission Provider's OASIS consistent with the Joint OATT.

19.4.2.4 Transmission Service Agreement:

Upon completion of the clustered System Impact Study and clustered Facilities Study (if necessary), a Transmission Service Agreement will be tendered to each of the Transmission Customers participating in the clustered Study(ies). The processes and requirements for completion of a Transmission Service Agreement set forth in this Joint OATT shall then apply.

19.5 Facilities Study Modifications: Any change in design arising from inability to site or construct facilities as proposed will require development of a revised good faith estimate. New good faith estimates also will be required in the event of new statutory or regulatory requirements that are effective before the completion of construction or other circumstances beyond the control of the Transmission Provider that significantly affect the final cost of new facilities or upgrades to be charged to the Transmission Customer pursuant to the provisions of Part II of the Tariff.

19.6 Due Diligence in Completing New Facilities: The Transmission Provider shall use due diligence to add necessary facilities or upgrade its Transmission System within a reasonable time. The Transmission Provider will not upgrade its existing or planned Transmission System in order to provide the requested Firm Point-To-Point Transmission Service if doing so would impair system reliability or otherwise impair or degrade existing firm service.

19.7 Partial Interim Service: If the Transmission Provider determines that it will not have adequate transfer capability to satisfy the full amount of a Completed

Application for Firm Point-To-Point Transmission Service, the Transmission Provider nonetheless shall be obligated to offer and provide the portion of the requested Firm Point-To-Point Transmission Service that can be accommodated without addition of any facilities and through redispatch. However, the Transmission Provider shall not be obligated to provide the incremental amount of requested Firm Point-To-Point Transmission Service that requires the addition of facilities or upgrades to the Transmission System until such facilities or upgrades have been placed in service.

19.8 Expedited Procedures for New Facilities: In lieu of the procedures set forth above, the Eligible Customer shall have the option to expedite the process by requesting the Transmission Provider to tender at one time, together with the results of required studies, an "Expedited Service Agreement" pursuant to which the Eligible Customer would agree to compensate the Transmission Provider for all costs incurred pursuant to the terms of the Tariff. In order to exercise this option, the Eligible Customer shall request in writing an expedited Service Agreement covering all of the above-specified items within thirty (30) days of receiving the results of the System Impact Study identifying needed facility additions or upgrades or costs incurred in providing the requested service. While the Transmission Provider agrees to provide the Eligible Customer with its best estimate of the new facility costs and other charges that may be incurred, such estimate shall not be binding and the Eligible Customer must agree in writing to compensate the Transmission Provider for all costs incurred pursuant to the provisions of the Tariff. The Eligible Customer shall execute and return such an Expedited Service Agreement within fifteen (15) days of its receipt or the Eligible Customer's request for service will cease to be a Completed Application and will be deemed terminated and withdrawn.

19.9 Penalties For Failure to Meet Study Deadlines: Sections 19.3 and 19.4.1 require a Transmission Provider to use due diligence to meet 60-day study completion deadlines for System Impact Studies and Facilities Studies

(i) The Transmission Provider is required to file a notice with the Commission in the event that more than twenty (20) percent of non-Affiliates' System Impact Studies and Facilities Studies completed by the Transmission Provider in any two consecutive calendar quarters are not completed within the 60-day study completion deadlines. Such notice must be filed within thirty (30) days of the end of the calendar quarter triggering the notice requirement.

(ii) For the purposes of calculating the percent of non-Affiliates' System Impact Studies and Facilities Studies processed outside of the 60-day study completion deadlines, the Transmission Provider shall consider all System Impact Studies and Facilities Studies that it completes for non-Affiliates during the calendar quarter. The percentage should be calculated by dividing the number of those studies which are completed on time by the total number of completed studies. The Transmission Provider may provide an explanation in its notification filing to the Commission if it believes there are extenuating circumstances that prevented it from meeting the 60-day study completion deadlines.

(iii) The Transmission Provider is subject to an operational penalty if it completes ten (10) percent or more of non-Affiliates' System Impact Studies and Facilities Studies outside of the 60-day study completion deadlines for each of the two calendar quarters immediately following the quarter that triggered its notification filing to the Commission. The operational penalty will be assessed for each calendar quarter for which an operational penalty applies, starting with the calendar quarter immediately following the quarter that triggered the Transmission Provider's notification filing to the Commission. The operational penalty will continue to be assessed each quarter until the Transmission Provider completes at least ninety (90) percent of all non-Affiliates' System Impact Studies and Facilities Studies within the 60-day deadline.

(iv) For penalties assessed in accordance with subsection (iii) above, the penalty amount for each System Impact Study or Facilities Study shall be equal to $500 for each day the Transmission Provider takes to complete that study beyond the 60-day deadline.

20 Procedures if the Transmission Provider is Unable to Complete New Transmission Facilities For Point-to-Point Service

20.1 Delays in Construction of New Facilities: If any event occurs that will materially affect the time for completion of new facilities, or the ability to complete them, the Transmission Provider shall promptly notify the Transmission Customer. In such circumstances, the Transmission Provider shall within thirty (30) days of notifying the Transmission Customer of such delays, convene a technical meeting with the Transmission Customer to evaluate the alternatives available to the Transmission Customer. The Transmission Provider also shall make available to the Transmission Customer studies and work papers related to the delay, including all information that is in the possession of the Transmission Provider that is reasonably needed by the Transmission Customer to evaluate any alternatives.

20.2 Alternatives to the Original Facility Additions: When the review process of Section 20.1 determines that one or more alternatives exist to the originally planned construction project, the Transmission Provider shall present such alternatives for consideration by the Transmission Customer. If, upon review of any alternatives, the Transmission Customer desires to maintain its Completed Application subject to construction of the alternative facilities, it may request the Transmission Provider to submit a revised Service Agreement for Firm Point-To-Point Transmission Service. If the alternative approach solely involves Non-Firm Point-To-Point Transmission Service, the Transmission Provider shall promptly tender a Service Agreement for Non-Firm Point-To-Point Transmission Service providing for the service. In the event the Transmission Provider concludes that no reasonable alternative exists and the Transmission Customer disagrees, the Transmission Customer may seek relief under the dispute resolution procedures pursuant to Section 12 or it may refer the dispute to the Commission for resolution.

20.3 Refund Obligation for Unfinished Facility Additions: If the Transmission Provider and the Transmission Customer mutually agree that no other reasonable alternatives exist and the requested service cannot be provided out of existing capability under the conditions of Part II of the Tariff, the obligation to provide the requested Firm Point-To-Point Transmission Service shall terminate and any deposit made by the Transmission Customer shall be returned with interest pursuant to Commission regulations § 35.19a(a)(2)(iii). However, the Transmission Customer shall be responsible for all prudently incurred costs by the Transmission Provider through the time construction was suspended.

21 Provisions Relating to Transmission Construction and Services Systems of other Utilities

21.1 Responsibility for Third-Party System Additions: The Transmission Provider shall not be responsible for making arrangements for any necessary engineering, permitting, and construction of transmission or distribution facilities on the system(s) of any other entity or for obtaining any regulatory approval for such facilities. The Transmission Provider will undertake reasonable efforts to assist the Transmission Customer in obtaining such arrangements, including without limitation, providing any information or data required by such other electric system pursuant to Good Utility Practice.

21.2 Coordination of Third-Party System Additions: In circumstances where the need for transmission facilities or upgrades is identified pursuant to the provisions of Part II of the Tariff, and if such upgrades further require the addition of transmission facilities on other systems, the Transmission Provider shall have the right to coordinate construction on its own system with the construction required by others. The Transmission Provider, after consultation with the Transmission Customer and representatives of such other systems, may defer construction of its new transmission facilities, if the new transmission facilities on another system cannot be completed in a timely manner. The Transmission Provider shall notify the Transmission Customer in writing of the basis for any decision to defer construction and the specific problems which must be resolved before it will initiate or resume construction of new facilities. Within sixty (60) days of receiving written notification by the Transmission Provider of its intent to defer construction pursuant to this section, the Transmission Customer may challenge the decision in accordance with the dispute resolution procedures pursuant to Section 12 or it may refer the dispute to the Commission for resolution.

22 Changes in Service Specifications Version: 0.0.0 Effective: 7/30/2010

22 Changes in Service Specifications

22.1 Modifications On a Non-Firm Basis: The Transmission Customer taking Firm Point-To-Point Transmission Service may request the Transmission Provider to provide transmission service on a non-firm basis over Receipt and Delivery Points other than those specified in the Service Agreement ("Secondary Receipt and Delivery Points"), in amounts not to exceed its firm capacity reservation, without incurring an additional Non-Firm Point-To-Point Transmission Service charge or executing a new Service Agreement, subject to the following conditions.

(a) Service provided over Secondary Receipt and Delivery Points will be non-firm only, on an as-available basis and will not displace any firm or non-firm service reserved or scheduled by third-parties under the Tariff or by the Transmission Provider on behalf of its Native Load Customers.

(b) The sum of all Firm and Non-Firm Point-To-Point Transmission Service provided to the Transmission Customer at any time pursuant to this section shall not exceed the Reserved Capacity in the relevant Service Agreement under which such services are provided.

(c) The Transmission Customer shall retain its right to schedule Firm Point-To-Point Transmission Service at the Receipt and Delivery Points specified in the relevant Service Agreement in the amount of its original capacity reservation.

(d) Service over Secondary Receipt and Delivery Points on a non-firm basis shall not require the filing of an Application for Non-Firm Point-To-Point Transmission Service under the Tariff. However, all other requirements of Part II of the Tariff (except as to transmission rates) shall apply to transmission service on a non-firm basis over Secondary Receipt and Delivery Points.

22.2 Modification On a Firm Basis: Any request by a Transmission Customer to modify Receipt and Delivery Points on a firm basis shall be treated as a new request for service in accordance with Section 17 hereof, except that such Transmission Customer shall not be obligated to pay any additional deposit if the capacity reservation does not exceed the amount reserved in the existing Service Agreement. While such new request is pending, the Transmission Customer shall retain its priority for service at the existing firm Receipt and Delivery Points specified in its Service Agreement.

23 Sale or Assignment of Transmission Service

23.1 Procedures for Assignment or Transfer of Service:

(a) A Transmission Customer may sell, assign, or transfer all or a portion of its rights under its Service Agreement, but only to another Eligible Customer (the Assignee). The Transmission Customer that sells, assigns or transfers its rights under its Service Agreement is hereafter referred to as the Reseller. Compensation to Resellers shall be at rates established by agreement between the Reseller and the Assignee.

(b) The Assignee must execute a service agreement with the Transmission Provider governing reassignments of transmission service prior to the date on which the reassigned service commences. The Transmission Provider shall charge the Reseller, as appropriate, at the rate stated in the Reseller's Service Agreement with the Transmission Provider or the associated OASIS schedule and credit the Reseller with the price reflected in the Assignee's Service Agreement with the Transmission Provider or the associated OASIS schedule; provided that, such credit shall be reversed in the event of non-payment by the Assignee. If the Assignee does not request any change in the Point(s) of Receipt or the Point(s) of Delivery, or a change in any other term or condition set forth in the original Service Agreement, the Assignee will receive the same services as did the Reseller and the priority of service for the Assignee will be the same as that of the Reseller. The Assignee will be subject to all terms and conditions of this Tariff. If the Assignee requests a change in service, the reservation priority of service will be determined by the Transmission Provider pursuant to Section 13.2.

23.2 Limitations on Assignment or Transfer of Service: If the Assignee requests a change in the Point(s) of Receipt or Point(s) of Delivery, or a change in any other specifications set forth in the original Service Agreement, the Transmission Provider will consent to such change subject to the provisions of the Tariff, provided that the change will not impair the operation and reliability of the Transmission Provider's generation, transmission, or distribution systems. The Assignee shall compensate the Transmission Provider for performing any System Impact Study needed to evaluate the capability of the Transmission System to accommodate the proposed change and any additional costs resulting from such change. The Reseller shall remain liable for the performance of all obligations under the Service Agreement, except as specifically agreed to by the Transmission Provider and the Reseller through an amendment to the Service Agreement.

23.3 Information on Assignment or Transfer of Service: In accordance with Section 4, all sales or assignments of capacity must be conducted through or otherwise posted on the Transmission Provider's OASIS on or before the date the reassigned service commences, and are subject to Section 23.1. Resellers may also use the Transmission Provider's OASIS to post transmission capacity available for resale.

24 Metering and Power Factor Correction at Receipt and Delivery Point(s)

24.1 Transmission Customer Obligations: Unless otherwise agreed, the Transmission Customer shall be responsible for installing and maintaining compatible metering and communications equipment to accurately account for the capacity and energy being transmitted under Part II of the Tariff and to communicate the information to the Transmission Provider. Such equipment shall remain the property of the Transmission Customer.

24.2 Transmission Provider Access to Metering Data: The Transmission Provider shall have access to metering data, which may reasonably be required to facilitate measurements and billing under the Service Agreement.

24.3 Power Factor: Unless otherwise agreed, the Transmission Customer is required to maintain a power factor within the same range as the Transmission Provider pursuant to Good Utility Practices. The power factor requirements are specified in the Service Agreement where applicable. The Transmission Customer shall control the character and installation of apparatus on lines (whether owned by the Transmission Customer or by any of its customers) so that the apparatus or the nature of its operation will not produce undue electrical disturbance on the Transmission Provider's system. If the apparatus or installation on the Customer's side of the Delivery Point produces undue electrical disturbance on or damage to the Transmission Provider's system, Customer shall at its expense, take such action as is required to eliminate the problem.

25 Compensation for Transmission Service Version: 0.0.0 Effective: 7/30/2010

25 Compensation for Transmission Service

Rates for Firm and Non-Firm Point-To-Point Transmission Service are provided in the Schedules appended to the Tariff: Firm Point-To-Point Transmission Service (Schedule 7); and Non-Firm Point-To-Point Transmission Service (Schedule 8). The Transmission Provider shall use Part II of the Tariff to make its Third-Party Sales. The Transmission Provider shall account for such use at the applicable Tariff rates, pursuant to Section 8.

26 Stranded Cost Recovery Version: 0.0.0 Effective: 7/30/2010

26 Stranded Cost Recovery

The Transmission Provider may seek to recover stranded costs from the Transmission Customer pursuant to this Tariff in accordance with the terms, conditions and procedures set forth in FERC Order No. 888. However, the Transmission Provider must separately file any specific proposed stranded cost charge under Section 205 of the Federal Power Act.

27 Compensation for New Facilities and Redispatch Costs Version: 0.0.0 Effective: 7/30/2010

27 Compensation for New Facilities and Re-dispatch Costs

Whenever a System Impact Study performed by the Transmission Provider in connection with the provision of Firm Point-To-Point Transmission Service identifies the need for new facilities, the Transmission Customer shall be responsible for such costs to the extent consistent with Commission policy. Whenever a System Impact Study performed by the Transmission Provider identifies capacity constraints that may be relieved by redispatching the Transmission Provider's resources to eliminate such constraints, the Transmission Customer shall be responsible for the redispatch costs to the extent consistent with Commission policy.

III. NETWORK INTEGRATION TRANSMISSION SERVICE

Preamble

The Transmission Provider will provide Network Integration Transmission Service pursuant to the applicable terms and conditions contained in the Tariff and Service Agreement unless such service is available under the SPP OATT. Notwithstanding the foregoing, SPS network load is served under the SPP OATT, but Network Integration Transmission Service between SPS and PSCo across the Lamar Tie that implements transactions under the Xcel Energy Joint Operating Agreement shall be provided under this Tariff, but may be subject to certain additional charges pursuant to the SPP OATT. Network Integration Transmission Service allows the Network Customer to integrate, economically dispatch and regulate its current and planned Network Resources to serve its Network Load in a manner comparable to that in which the Transmission Provider utilizes its Transmission System to serve its Native Load Customers. Network Integration Transmission Service also may be used by the Network Customer to deliver economy energy purchases to its Network Load from non-designated resources on an as-available basis without additional charge. Transmission service for sales to non-designated loads will be provided pursuant to the applicable terms and conditions of Part II of the Tariff.

28 Nature of Network Integration Transmission Service

28.1 **Scope of Service**: Network Integration Transmission Service is a transmission service that allows Network Customers to efficiently and economically utilize their Network Resources (as well as other non-designated generation resources) to serve their Network Load located in the Transmission Provider's Control Area and any additional load that may be designated pursuant to Section 31.3 of the Tariff. The Network Customer taking Network Integration Transmission Service must obtain or provide Ancillary Services pursuant to Section 3.

28.2 **Transmission Provider Responsibilities**: The Transmission Provider will plan, construct, operate and maintain its Transmission System in accordance with Good Utility Practice and its planning obligations in Attachment R in order to provide the Network Customer with Network Integration Transmission Service over the Transmission Provider's Transmission System. The Transmission Provider, on behalf of its Native Load Customers, shall be required to designate resources and loads in the same manner as any Network Customer under Part III of this Tariff. This information must be consistent with the information used by the Transmission Provider to calculate available transfer capability. The Transmission Provider shall include the Network Customer's Network Load in its Transmission System planning and shall, consistent with Good Utility Practice and Attachment R, endeavor to construct and place into service sufficient transfer capability to deliver the Network Customer's Network Resources to serve its Network Load on a basis comparable to the Transmission Provider's delivery of its own generating and purchased resources to its Native Load Customers.

28.3 **Network Integration Transmission Service:** The Transmission Provider will provide firm transmission service over its Transmission System to the Network Customer for the delivery of capacity and energy from its designated Network Resources to service its Network Loads on a basis that is comparable to the Transmission Provider's use of the Transmission System to reliably serve its Native Load Customers.

28.4 **Secondary Service:** The Network Customer may use the Transmission Provider's Transmission System to deliver energy to its Network Loads from resources that have not been designated as Network Resources. Such energy shall be transmitted, on an as-available basis, at no additional charge. Secondary service shall not require the filing of an Application for Network Integration Transmission Service under the Tariff. However, all other requirements of Part III of the Tariff (except for transmission rates) shall apply to secondary service. Deliveries from resources other than Network Resources will have a higher priority than any Non-Firm Point-To-Point Transmission Service under Part II of the Tariff.

28.5 **Real Power Losses:** Real Power Losses are associated with all transmission service. The Transmission Provider is not obligated to provide Real Power Losses. The Network Customer is responsible for replacing losses associated with all transmission service as calculated by the Transmission Provider. The applicable Real Power Losses are as follows:

For Service on the NSP Transmission System: 2.4%

For Service on the PSCo System:

	Demand	Energy
Transmission System:	2.52%	1.87%
Distribution System – Primary Voltage:	2.28%	1.81%

For Service on the SPS System:

	Demand	Energy
Transmission System:	3.3370%	2.6493%
Distribution System – Primary Voltage:	10.0501%	7.1863%

The loss factors for Direct Assignment Facilities shall be determined on a case by case basis.

28.6 **Restrictions on Use of Service:** The Network Customer shall not use Network Integration Transmission Service for (i) sales of capacity and energy to non-designated loads, or (ii) direct or indirect provision of transmission service by the Network Customer to third parties. All Network Customers taking Network Integration Transmission Service shall use Point-To-Point Transmission Service under Part II of the Tariff for any Third-Party Sale which requires use of the Transmission Provider's Transmission System. The Transmission Provider shall specify any appropriate charges and penalties and all related terms and conditions applicable in the event that a Network Customer uses Network Integration Transmission Service or secondary service pursuant to Section 28.4 to facilitate a wholesale sale that does not serve a Network Load.

29 Initiating Service Version: 0.0.0 Effective: 7/30/2010

29 Initiating Service

29.1 Condition Precedent for Receiving Service: Subject to the terms and conditions of Part III of the Tariff, the Transmission Provider will provide Network Integration Transmission Service to any Eligible Customer, provided that (i) the Eligible Customer completes an Application for service as provided under Part III of the Tariff, (ii) the Eligible Customer and the Transmission Provider complete the technical arrangements set forth in Sections 29.3 and 29.4, (iii) the Eligible Customer executes a Service Agreement pursuant to Attachment F for service under Part III of the Tariff or requests in writing that the Transmission Provider file a proposed unexecuted Service Agreement with the Commission, and (iv) the Eligible Customer executes a Network Operating Agreement with the Transmission Provider pursuant to Attachment G, or requests in writing that the Transmission Provider file a proposed unexecuted Network Operating Agreement.

29.2 Application Procedures: An Eligible Customer requesting service under Part III of the Tariff must submit an Application, with a deposit approximating the charge for one month of service, to the Transmission Provider as far as possible in advance of the month in which service is to commence. The Transmission Provider may, on a non-discriminatory basis, waive the requirement that a deposit accompany an Application where the Eligible Customer has established its creditworthiness pursuant to Section 11 and is not in default of its obligations as defined in Section 7.3 at the time of the Application. Unless subject to the procedures in Section 2, Completed Applications for Network Integration Transmission Service will be assigned a priority according to the date and time the Application is received, with the earliest Application receiving the highest priority. Applications should be submitted by entering the information listed below on the Transmission Provider's OASIS. A Completed Application shall provide all of the information included in 18 CFR § 2.20 including but not limited to the following:

(i) The identity, address, telephone number and facsimile number of the party requesting service;

(ii) A statement that the party requesting service is, or will be upon commencement of service, an Eligible Customer under the Tariff;

(iii) A description of the Network Load at each delivery point. This description should separately identify and provide the Eligible Customer's best estimate of the total loads to be served at each transmission voltage level, and the loads to be served from each Transmission Provider substation at the same transmission voltage level. The description should include a ten (10) year forecast of summer and winter load and resource requirements beginning with the first year after the service is scheduled to commence;

(iv) The amount and location of any interruptible loads included in the Network Load. This shall include the summer and winter capacity

requirements for each interruptible load (had such load not been interruptible), that portion of the load subject to interruption, the conditions under which an interruption can be implemented and any limitations on the amount and frequency of interruptions. An Eligible Customer should identify the amount of interruptible customer load (if any) included in the 10 year load forecast provided in response to (iii) above;

(v) A description of Network Resources (current and 10-year projection). For each on-system Network Resource, such description shall include:

- Unit size and amount of capacity from that unit to be designated as Network Resource
- VAR capability (both leading and lagging) of all generators
- Operating restrictions
  - Any periods of restricted operations throughout the year
  - Maintenance schedules
  - Minimum loading level of unit
  - Normal operating level of unit
  - Any must-run unit designations required for system reliability or contract reasons
- Approximate variable generating cost ($/MWh) for redispatch computations
- Arrangements governing sale and delivery of power to third parties from generating facilities located in the Transmission Provider Control Area, where only a portion of unit output is designated as a Network Resource

For each off-system Network Resource, such description shall include:

- Identification of the Network Resource as an off-system resource
- Amount of power to which the customer has rights
- Identification of the control area from which the power will originate
- Delivery point(s) to the Transmission Provider's Transmission System
- Transmission arrangements on the external transmission system(s)
- Operating restrictions, if any
  - Any periods of restricted operations throughout the year
  - Maintenance schedules
  - Minimum loading level of unit
  - Normal operating level of unit
  - Any must-run unit designations required for system reliability or contract reasons
  - Approximate variable generating cost ($/MWh) for redispatch computations

(vi) Description of Eligible Customer's transmission system:

- Load flow and stability data, such as real and reactive parts of the load, lines, transformers, reactive devices and load type,

including normal and emergency ratings of all transmission equipment in a load flow format compatible with that used by the Transmission Provider
- Operating restrictions needed for reliability
- Operating guides employed by system operators

- Contractual restrictions or committed uses of the Eligible Customer's transmission system, other than the Eligible Customer's Network Loads and Resources
- Location of Network Resources described in subsection (v) above
- 10 year projection of system expansions or upgrades
- Transmission System maps that include any proposed expansions or upgrades
- Thermal ratings of Eligible Customer's Control Area ties with other Control Areas;

(vii) Service Commencement Date and the term of the requested Network Integration Transmission Service. The minimum term for Network Integration Transmission Service is one year;

(viii) A statement signed by an authorized officer from or agent of the Network Customer attesting that all of the network resources listed pursuant to Section 29.2(v) satisfy the following conditions: (1) the Network Customer owns the resource, has committed to purchase generation pursuant to an executed contract, or has committed to purchase generation where execution of a contract is contingent upon the availability of transmission service under Part III of the Tariff; and (2) the Network Resources do not include any resources, or any portion thereof, that are committed for sale to non-designated third party load or otherwise cannot be called upon to meet the Network Customer's Network Load on a non-interruptible basis, except for purposes of fulfilling obligations under a reserve sharing program; and

(ix) Any additional information required of the Transmission Customer as specified in the Transmission Provider’s planning process established in Attachment R.

Unless the Parties agree to a different time frame, the Transmission Provider must acknowledge the request within ten (10) days of receipt. The acknowledgement must include a date by which a response, including a Service Agreement, will be sent to the Eligible Customer. If an Application fails to meet the requirements of this section, the Transmission Provider shall notify the Eligible Customer requesting service within fifteen (15) days of receipt and specify the reasons for such failure. Wherever possible, the Transmission Provider will attempt to remedy deficiencies in the Application through informal communications with the Eligible Customer. If such efforts are unsuccessful, the Transmission Provider shall return the Application, along with any deposit, plus interest, without prejudice to the Eligible Customer filing a new or revised Application that fully complies with the requirements of this section. The Transmission Provider will bill the Eligible Customer for any reasonable costs incurred by the Transmission Provider in connection with its review of the

Application whether or not a Service Agreement for Network Integration Transmission Service is executed. Such bill will contain a complete accounting of all costs included. The Eligible Customer will be assigned a new priority consistent with the date of the new or revised Application. The Transmission Provider shall treat this information consistent with the standards of conduct contained in Part 37 of the Commission's regulations.

29.3 Technical Arrangements to be Completed Prior to Commencement of Service: Network Integration Transmission Service shall not commence until the Transmission Provider and the Network Customer, or a third party, have completed installation of all equipment specified under the Network Operating Agreement consistent with Good Utility Practice and any additional requirements reasonably and consistently imposed to ensure the reliable operation of the Transmission System. The Transmission Provider shall exercise reasonable efforts, in coordination with the Network Customer, to complete such arrangements as soon as practicable taking into consideration the Service Commencement Date.

29.4 Network Customer Facilities: The provision of Network Integration Transmission Service shall be conditioned upon the Network Customer's constructing, maintaining and operating the facilities on its side of each delivery point or interconnection necessary to reliably deliver capacity and energy from the Transmission Provider's Transmission System to the Network Customer. The Network Customer shall be solely responsible for constructing or installing all facilities on the Network Customer's side of each such delivery point or interconnection.

29.5 Filing of Service Agreement: The Transmission Provider will file Service Agreements with the Commission in compliance with applicable Commission regulations.

30 Network Resources Version: 0.0.0 Effective: 7/30/2010

30 Network Resources

30.1 Designation of Network Resources: Network Resources shall include all generation owned, purchased or leased by the Network Customer designated to serve Network Load under the Tariff. For purposes of temporary termination under Section 30.3, all or part of such generation associated with a NERC-registered Point of Receipt, behind which there are no constraints, may be treated as a single Network Resource. Network Resources may not include resources, or any portion thereof, that are committed for sale to non-designated third party load or otherwise cannot be called upon to meet the Network Customer's Network Load on a non-interruptible basis, except for purposes of fulfilling obligations under a reserve sharing program. Any owned or purchased resources that were serving the Network Customer's loads under firm agreements entered into on or before the Service Commencement Date shall initially be designated as Network Resources until the Network Customer terminates the designation of such resources.

30.2 Designation of New Network Resources: The Network Customer may designate a new Network Resource by providing the Transmission Provider with as much advance notice as practicable. A designation of a new Network Resource must be made through the Transmission Provider's OASIS by a request for modification of service pursuant to an Application under Section 29. This request must include a statement that the new network resource satisfies the following conditions: (1) the Network Customer owns the resource, has committed to purchase generation pursuant to an executed contract, or has committed to purchase generation where execution of a contract is contingent upon the availability of transmission service under Part III of the Tariff; and (2) The Network Resources do not include any resources, or any portion thereof, that are committed for sale to non-designated third party load or otherwise cannot be called upon to meet the Network Customer's Network Load on a non-interruptible basis, except for purposes of fulfilling obligations under a reserve sharing program. The Network Customer's request will be deemed deficient if it does not include this statement and the Transmission Provider will follow the procedures for a deficient application as described in Section 29.2 of the Tariff.

30.3 Termination of Network Resources: The Network Customer may terminate the designation of all or part of a generating resource as a Network Resource by providing notification to the Transmission Provider through OASIS as soon as reasonably practicable, but not later than the firm scheduling deadline for the period of termination. Any request for termination of Network Resource status must be submitted on OASIS, and should indicate whether the request is for indefinite or temporary termination. A request for indefinite termination of Network Resource status must indicate the date and time that the termination is to be effective, and the identification and capacity of the resource(s) or portions thereof to be indefinitely terminated. A request for temporary termination of Network Resource status must include the following:

(i) Effective date and time of temporary termination;

(ii) Effective date and time of redesignation, following period of temporary termination;

(iii) Identification and capacity of resource(s) or portions thereof to be temporarily terminated or where appropriate, identification of the NERC-registered Point of Receipt to which Network Resources are assigned and the capacity to be temporarily terminated;

(iv) Resource description and attestation for redesignating the network resource following the temporary termination, in accordance with Section 30.2; and

(v) Identification of any related transmission service requests to be evaluated concomitantly with the request for temporary termination, such that the requests for undesignation and the request for these related transmission service requests must be approved or denied as a single request. The evaluation of these related transmission service requests must take into account the termination of the network resources identified in (iii) above, as well as all competing transmission service requests of higher priority.

As part of a temporary termination, a Network Customer may only redesignate the same resource that was originally designated, or a portion thereof. Requests to redesignate a different resource and/or a resource with increased capacity will be deemed deficient and the Transmission Provider will follow the procedures for a deficient application as described in Section 29.2 of the Tariff.

30.4 **Operation of Network Resources:** The Network Customer shall not operate its designated Network Resources located in the Network Customer's or Transmission Provider's Control Area such that the output of those facilities exceeds its designated Network Load, plus Non-Firm Sales delivered pursuant to Part II of the Tariff, plus losses, plus power sales under a reserve sharing program, plus sales that permit curtailment without penalty to serve its designated Network Load. This limitation shall not apply to changes in the operation of a Transmission Customer's Network Resources at the request of the Transmission Provider to respond to an emergency or other unforeseen condition which may impair or degrade the reliability of the Transmission System. For all Network Resources not physically connected with the Transmission Provider’s Transmission System, the Network Customer may not schedule delivery of energy in excess of the Network Resource’s capacity, as specified in the Network Customer’s Application pursuant to Section 29, unless the Network Customer supports such delivery within the Transmission Provider’s Transmission System by either obtaining Point-to-Point Transmission Service or utilizing secondary service pursuant to Section 28.4. The Transmission Provider shall specify the rate treatment and all related terms and conditions applicable in the event that a Network Customer’s schedule at the delivery point for a Network Resource not physically interconnected with the Transmission Provider's Transmission System exceeds the Network

Resource's designated capacity, excluding energy delivered using secondary service or Point-to-Point Transmission Service.

30.5 Network Customer Redispatch Obligation: As a condition to receiving Network Integration Transmission Service, the Network Customer agrees to redispatch its Network Resources as requested by the Transmission Provider pursuant to Section 33.2. To the extent practical, the redispatch of resources pursuant to this section shall be on a least cost, non-discriminatory basis between all Network Customers, and the Transmission Provider.

30.6 Transmission Arrangements for Network Resources Not Physically Interconnected With The Transmission Provider: The Network Customer shall be responsible for any arrangements necessary to deliver capacity and energy from a Network Resource not physically interconnected with the Transmission Provider's Transmission System. The Transmission Provider will undertake reasonable efforts to assist the Network Customer in obtaining such arrangements, including without limitation, providing any information or data required by such other entity pursuant to Good Utility Practice.

30.7 Limitation on Designation of Network Resources: The Network Customer must demonstrate that it owns or has committed to purchase generation pursuant to an executed contract in order to designate a generating resource as a Network Resource. Alternatively, the Network Customer may establish that execution of a contract is contingent upon the availability of transmission service under Part III of the Tariff.

30.8 Use of Interface Capacity by the Network Customer: There is no limitation upon a Network Customer's use of the Transmission Provider's Transmission System at any particular interface to integrate the Network Customer's Network Resources (or substitute economy purchases) with its Network Loads. However, a Network Customer's use of the Transmission Provider's total interface capacity with other transmission systems may not exceed the Network Customer's Load.

30.9 Network Customer Owned Transmission Facilities: The Network Customer that owns existing transmission facilities that are integrated with the Transmission Provider's Transmission System may be eligible to receive consideration either through a billing credit or some other mechanism. In order to receive such consideration the Network Customer must demonstrate that its transmission facilities are integrated into the plans or operations of the Transmission Provider to serve its power and transmission customers. For facilities added by the Network Customer subsequent to July 13, 2007, the Network Customer shall receive credit for such transmission facilities added if such facilities are integrated into the operations of the Transmission Provider's facilities; provided however, the Network Customer's transmission facilities shall be presumed to be integrated if such transmission facilities, if owned by the Transmission Provider, would be eligible for inclusion in the Transmission Provider's annual transmission revenue requirement as specified in Attachment H. Calculation of any credit under this subsection shall be addressed in either

the Network Customer's Service Agreement or any other agreement between the Parties.

31 Designation of Network Load Version: 0.0.0 Effective: 7/30/2010

31 Designation of Network Load

31.1 Network Load: The Network Customer must designate the individual Network Loads on whose behalf the Transmission Provider will provide Network Integration Transmission Service. The Network Loads shall be specified in the Service Agreement.

31.2 New Network Loads Connected With the Transmission Provider: The Network Customer shall provide the Transmission Provider with as much advance notice as reasonably practicable of the designation of new Network Load that will be added to its Transmission System. A designation of new Network Load must be made through a modification of service pursuant to a new Application. The Transmission Provider will use due diligence to install any transmission facilities required to interconnect a new Network Load designated by the Network Customer. The costs of new facilities required to interconnect a new Network Load shall be determined in accordance with the procedures provided in Section 32.4 and shall be charged to the Network Customer in accordance with Commission policies.

31.3 Network Load Not Physically Interconnected with the Transmission Provider: This section applies to both initial designation pursuant to Section 31.1 and the subsequent addition of new Network Load not physically interconnected with the Transmission Provider. To the extent that the Network Customer desires to obtain transmission service for a load outside the Transmission Provider's Transmission System, the Network Customer shall have the option of (1) electing to include the entire load as Network Load for all purposes under Part III of the Tariff and designating Network Resources in connection with such additional Network Load, or (2) excluding that entire load from its Network Load and purchasing Point-To-Point Transmission Service under Part II of the Tariff. To the extent that the Network Customer gives notice of its intent to add a new Network Load as part of its Network Load pursuant to this section the request must be made through a modification of service pursuant to a new Application.

31.4 New Interconnection Points: To the extent the Network Customer desires to add a new Delivery Point or interconnection point between the Transmission Provider's Transmission System and a Network Load, the Network Customer shall provide the Transmission Provider with as much advance notice as reasonably practicable.

31.5 Changes in Service Requests: Under no circumstances shall the Network Customer's decision to cancel or delay a requested change in Network Integration Transmission Service (e.g. the addition of a new Network Resource or designation of a new Network Load) in any way relieve the Network Customer of its obligation to pay the costs of transmission facilities constructed by the Transmission Provider and charged to the Network Customer as reflected in the Service Agreement. However, the Transmission Provider must treat any requested change in Network Integration Transmission Service in a non-discriminatory manner.

31.6 Annual Load and Resource Information Updates: The Network Customer shall provide the Transmission Provider with annual updates of Network Load and Network Resource forecasts consistent with those included in its Application for Network Integration Transmission Service under Part III of the Tariff including, but not limited to, any information provided under section 29.2(ix) pursuant to the Transmission Provider’s planning process in Attachment R. The Network Customer also shall provide the Transmission Provider with timely written notice of material changes in any other information provided in its Application relating to the Network Customer's Network Load, Network Resources, its transmission system or other aspects of its facilities or operations affecting the Transmission Provider's ability to provide reliable service.

32 Additional Study Procedures for Network Integration Transmission Service Requests

32.1 Notice of Need for System Impact Study: After receiving a request for service, the Transmission Provider shall determine on a non-discriminatory basis whether a System Impact Study is needed. A description of the Transmission Provider's methodology for completing a System Impact Study is provided in Attachment D. If the Transmission Provider determines that a System Impact Study is necessary to accommodate the requested service, it shall so inform the Eligible Customer, as soon as practicable. In such cases, the Transmission Provider shall within thirty (30) days of receipt of a Completed Application, tender a System Impact Study Agreement pursuant to which the Eligible Customer shall agree to reimburse the Transmission Provider for performing the required System Impact Study. A form of System Impact Study Agreement is included as Attachment K. For a service request to remain a Completed Application, the Eligible Customer shall execute the System Impact Study Agreement and return it to the Transmission Provider within fifteen (15) days. If the Eligible Customer elects not to execute the System Impact Study Agreement, its Application shall be deemed withdrawn and its deposit shall be returned with interest.

32.2 System Impact Study Agreement and Cost Reimbursement:

(i) The System Impact Study Agreement will clearly specify the Transmission Provider's estimate of the actual cost, and time for completion of the System Impact Study. The charge shall not exceed the actual cost of the study. In performing the System Impact Study, the Transmission Provider shall rely, to the extent reasonably practicable, on existing transmission planning studies. The Eligible Customer will not be assessed a charge for such existing studies; however, the Eligible Customer will be responsible for charges associated with any modifications to existing planning studies that are reasonably necessary to evaluate the impact of the Eligible Customer's request for service on the Transmission System.

(ii) If in response to multiple Eligible Customers requesting service in relation to the same competitive solicitation, a single System Impact Study is sufficient for the Transmission Provider to accommodate the service requests, the costs of that study shall be pro-rated among the Eligible Customers.

(iii) For System Impact Studies that the Transmission Provider conducts on its own behalf, the Transmission Provider shall record the cost of the System Impact Studies pursuant to Section 8.

32.3 System Impact Study Procedures: Upon receipt of an executed System Impact Study Agreement, the Transmission Provider will use due diligence to complete the required System Impact Study within a sixty (60) day period. The System Impact Study shall identify (1) any system constraints identified with

specificity by transmission element or flowgate, (2) redispatch options (when requested by an Eligible Customer) including, to the extent possible, an estimate of the cost of redispatch, (3) available options for installation of automatic devices to curtail service (when requested by an Eligible Customer), and (4) additional Direct Assignment Facilities or Network Upgrades required to provide the requested service. For customers requesting the study of redispatch options, the System Impact Study shall (1) identify all resources located within the Transmission Provider's Control Area that can significantly contribute toward relieving the system constraint and (2) provide a measurement of each resource's impact on the system constraint. If the Transmission Provider possesses information indicating that any resource outside its Control Area could relieve the constraint, it shall identify each such resource in the System Impact Study. In the event that the Transmission Provider is unable to complete the required System Impact Study within such time period, it shall so notify the Eligible Customer and provide an estimated completion date along with an explanation of the reasons why additional time is required to complete the required studies. A copy of the completed System Impact Study and related work papers shall be made available to the Eligible Customer as soon as the System Impact Study is complete. The Transmission Provider will use the same due diligence in completing the System Impact Study for an Eligible Customer as it uses when completing studies for itself. The Transmission Provider shall notify the Eligible Customer immediately upon completion of the System Impact Study if the Transmission System will be adequate to accommodate all or part of a request for service or that no costs are likely to be incurred for new transmission facilities or upgrades. In order for a request to remain a Completed Application, within fifteen (15) days of completion of the System Impact Study the Eligible Customer must execute a Service Agreement or request the filing of an unexecuted Service Agreement, or the Application shall be deemed terminated and withdrawn.

32.4.1 Facilities Study Procedures: If a System Impact Study indicates that additions or upgrades to the Transmission System are needed to supply the Eligible Customer's service request, the Transmission Provider, within thirty (30) days of the completion of the System Impact Study, shall tender to the Eligible Customer a Facilities Study Agreement pursuant to which the Eligible Customer shall agree to reimburse the Transmission Provider for performing the required Facilities Study. A form of Facilities Study Agreement is included as Attachment L. For a service request to remain a Completed Application, the Eligible Customer shall execute the Facilities Study Agreement and return it to the Transmission Provider within fifteen (15) days. If the Eligible Customer elects not to execute the Facilities Study Agreement, its Application shall be deemed withdrawn and its deposit shall be returned with interest. Upon receipt of an executed Facilities Study Agreement, the Transmission Provider will use due diligence to complete the required Facilities Study within a sixty (60) day period. If the Transmission Provider is unable to complete the Facilities Study in the allotted time period, the Transmission Provider shall notify the Eligible Customer and provide an estimate of the time needed to reach a final determination along with an explanation of the reasons that additional time is required to complete the study. When completed, the Facilities Study will include a good faith estimate of (i) the cost of Direct Assignment Facilities to be

charged to the Eligible Customer, (ii) the Eligible Customer's appropriate share of the cost of any required Network Upgrades, and (iii) the time required to complete such construction and initiate the requested service. The Eligible Customer shall provide the Transmission Provider with a letter of credit or other reasonable form of security acceptable to the Transmission Provider equivalent to the costs of new facilities or upgrades consistent with commercial practices as established by the Uniform Commercial Code. The Eligible Customer shall have thirty (30) days to execute a Service Agreement or request the filing of an unexecuted Service Agreement and provide the required letter of credit or other form of security or the request no longer will be a Completed Application and shall be deemed terminated and withdrawn.

32.4.2 Clustered Transmission Service Requests

32.4.2.1 Cluster Identification:

At Transmission Provider's option, or if specifically requested by a Transmission Customer and found feasible by the Transmission Provider, Transmission Service Requests may be studied in clusters for the purpose of the Transmission Service System Impact Study and Facilities Studies.

Clustering shall be implemented on the basis of Queue Position. If Transmission Provider elects to study Transmission Service Requests using Clustering, all Transmission Service Requests which impact a common transmission path or region received within a period not to exceed sixty (60) Calendar Days, hereinafter referred to as the "Transmission Service Queue Cluster Window", shall be studied together without regard to the nature of the underlying Transmission Service, whether Firm Point-to-Point, Network Integration Transmission Service or service to serve Transmission Provider's native load.

Transmission Provider may, at its option, announce an "open season" by a posting on Transmission Provider's OASIS seeking transmission service requests affecting a common transmission path (or paths) or region to establish a Transmission Service Queue Cluster Window. The open season shall have a fixed time interval based on fixed opening and closing dates. Any changes to the established open season opening or closing dates shall be announced with a posting on Transmission Provider's OASIS at least ten (10) days in advance of the change.

All transmission service requests affecting the common transmission path(s) or region received after the announced Transmission Service Queue Cluster Window will be considered serially after the clustered System Impact Study and Facilities Study (if necessary).

32.4.2.2 System Impact Studies

Transmission Provider shall be allowed up to 60 days to complete a clustered System Impact Study. Each participating Transmission Customer will be charged an equal portion of the clustered System Impact Study cost regardless

of the type or level of Transmission Service requested. Each participating Transmission Customer will be tendered a clustered System Impact Study Agreement for signature. The signed System Impact Study Agreement and the required deposit must be returned to Transmission Provider within 30 days or the Transmission Customer's transmission service request will be deemed withdrawn and removed from the clustered System Impact Study. If a participating Transmission Customer elects to opt out of a Transmission Provider-initiated clustered study prior to execution of a System Impact Study Agreement, such customer may request an individual study. If the Transmission Provider determines it is feasible to study the Transmission Customer’s Transmission Service Request individually, it shall tender an individual System Impact Study Agreement for signature, and the Transmission Customer shall retain its original queue position.

If a participating Transmission Customer elects to opt out of a cluster study after signing the System Impact Study Agreement, the Transmission Customer will be responsible for its share of any System Impact Study costs incurred before its departure and may submit a new Transmission Service Request for an individual study, if Transmission Provider determines that such request can be studied individually. The remaining customers in the cluster shall be responsible for a re-allocated share of all clustered study costs incurred after a Transmission Customer opts out of the cluster. The request of the Transmission Customer opting out shall be treated as a new request and placed at the end of the queue. Clustered System Impact Studies shall be conducted in such a manner to provide the efficient implementation of the applicable regional transmission expansion plan in light of the Transmission System's capabilities at the time of each study.

After Transmission Provider completes the clustered System Impact Study, the results will be provided at the same time to all the participating Transmission Customers. The results will also be posted on Transmission Provider’s OASIS consistent with the Joint OATT.

32.4.2.3 Facilities Studies

If required and consistent with the Joint OATT, after completion of the clustered System Impact Study, the Transmission Provider will perform a clustered Facilities Study.

Transmission Provider shall be allowed up to 60 days to complete a clustered Facilities Study. Each participating Transmission Customer will be charged an equal portion of the clustered Facilities Study cost regardless of the type or level of Transmission Service requested. Each participating Transmission Customer will be tendered a clustered Facilities Study Agreement for signature. The signed Facilities Study Agreement and the required deposit must be returned to Transmission Provider within 30 days or the Transmission Customer's transmission service request will be deemed withdrawn and removed from the clustered Facilities Study.

After Transmission Provider completes the clustered Facilities Study, the results will be provided at the same time to all the Transmission Customers who signed the Facilities Study Agreement. The results will also be posted on Transmission Provider's OASIS consistent with the Joint OATT.

32.4.2.4 Transmission Service Agreement

Upon completion of the clustered System Impact Study and clustered Facilities Study (if necessary), a Transmission Service Agreement will be tendered to each of the Transmission Customers participating in the clustered Study(ies). The processes and requirements for completion of a Transmission Service Agreement set forth in this Joint OATT shall then apply.

32.5 Penalties for Failure to Meet Study Deadlines: Section 19.9 defines penalties that apply for failure to meet the 60-day study completion due diligence deadlines for System Impact Studies and Facilities Studies under Part II of the Tariff. These same requirements and penalties apply to service under Part III of the Tariff.

33 Load Shedding and Curtailments

33.1.1 Procedures on the PSCo System: Prior to the Service Commencement Date, the Transmission Provider and the Network Customer shall establish Load Shedding and Curtailment procedures pursuant to the Network Operating Agreement with the objective of responding to contingencies on the Transmission System. The Parties will implement such programs during any period when the Transmission Provider determines that a system contingency exists and such procedures are necessary to alleviate such contingency. The Transmission Provider will notify all affected Network Customers in a timely manner of any scheduled Curtailment.

33.1.2 Procedures on the NSP and SPS Systems: Prior to the Service Commencement Date, the Transmission Provider and the Network Customer shall establish Load Shedding and Curtailment procedures pursuant to the Network Operating Agreement with the objective of responding to contingencies on the Transmission System and on systems directly and indirectly interconnected with the Transmission Provider’s Transmission System. The Parties will implement such programs during any period when the Transmission Provider determines that a system contingency exists and such procedures are necessary to alleviate such contingency. The Transmission Provider will notify all affected Network Customers in a timely manner of any scheduled Curtailment.

33.2 Transmission Constraints: During any period when the Transmission Provider determines that a transmission constraint exists on the Transmission System, and such constraint may impair the reliability of the Transmission Provider's system, the Transmission Provider will take whatever actions, consistent with Good Utility Practice, that are reasonably necessary to maintain the reliability of the Transmission Provider's system. To the extent the Transmission Provider determines that the reliability of the Transmission System can be maintained by redispatching resources, the Transmission Provider will initiate procedures pursuant to the Network Operating Agreement to redispatch all Network Resources and the Transmission Provider's own resources on a least-cost basis without regard to the ownership of such resources. Any redispatch under this section may not unduly discriminate between the Transmission Provider's use of the Transmission System on behalf of its Native Load Customers and any Network Customer's use of the Transmission System to serve its designated Network Load.

33.3 Cost Responsibility for Relieving Transmission Constraints: Whenever the Transmission Provider implements least-cost redispatch procedures in response to a transmission constraint, the Transmission Provider and Network Customers will each bear a proportionate share of the total redispatch cost based on their respective Load Ratio Shares.

33.4 Curtailments of Scheduled Deliveries: If a transmission constraint on the Transmission Provider's Transmission System cannot be relieved through the implementation of least-cost redispatch procedures and the Transmission

Provider determines that it is necessary to Curtail scheduled deliveries, the Parties shall Curtail such schedules in accordance with the Network Operating Agreement or pursuant to the transmission loading relief procedures specified in Attachment J.

33.5 **Allocation of Curtailments:** The Transmission Provider shall, on a non-discriminatory basis, Curtail the transaction(s) that effectively relieve the constraint. However, to the extent practicable and consistent with Good Utility Practice, any Curtailment will be shared by the Transmission Provider and Network Customer in proportion to their respective Load Ratio Shares. The Transmission Provider shall not direct the Network Customer to Curtail schedules to an extent greater than the Transmission Provider would Curtail the Transmission Provider's schedules under similar circumstances.

33.6 **Load Shedding:** To the extent that a system contingency exists on the Transmission Provider's Transmission System and the Transmission Provider determines that it is necessary for the Transmission Provider and the Network Customer to shed load, the Parties shall shed load in accordance with previously established procedures under the Network Operating Agreement.

33.7 **System Reliability:** Notwithstanding any other provisions of this Tariff, the Transmission Provider reserves the right, consistent with Good Utility Practice and on a not unduly discriminatory basis, to Curtail Network Integration Transmission Service without liability on the Transmission Provider's part for the purpose of making necessary adjustments to, changes in, or repairs on its lines, substations and facilities, and in cases where the continuance of Network Integration Transmission Service would endanger persons or property. In the event of any adverse condition(s) or disturbance(s) on the Transmission Provider's Transmission System or on any other system(s) directly or indirectly interconnected with the Transmission Provider's Transmission System, the Transmission Provider, consistent with Good Utility Practice, also may Curtail Network Integration Transmission Service in order to (i) limit the extent or damage of the adverse condition(s) or disturbance(s), (ii) prevent damage to generating or transmission facilities, or (iii) expedite restoration of service. The Transmission Provider will give the Network Customer as much advance notice as is practicable in the event of such Curtailment. Any Curtailment of Network Integration Transmission Service will be not unduly discriminatory relative to the Transmission Provider's use of the Transmission System on behalf of its Native Load Customers. The Transmission Provider shall specify the rate treatment and all related terms and conditions applicable in the event that the Network Customer fails to respond to established Load Shedding and Curtailment procedures.

34 Rates and Charges

The Network Customer shall pay the Transmission Provider for any Direct Assignment Facilities, Ancillary Services, and applicable study costs, consistent with Commission policy, along with the following, except as may be governed by a settlement accepted by the FERC:

34.1.1 Monthly Demand Charge on the SPS Transmission System: The Network Customer on the SPS Transmission System shall pay a Monthly Demand Charge, which shall be determined by multiplying its Load Ratio Share times one twelfth (1/12) of the Transmission Provider's Annual Transmission Revenue Requirement specified in Attachment H. Monthly customer bills shall reflect any (i) credits for Network Customer Owned Transmission Facilities and (ii) other applicable charges provided in Attachment H. Effective January 1, 2009, the Network Customer shall compensate the Transmission Provider for Network Integration Transmission Service at the applicable charges set forth below in addition to other applicable charges specified in the Tariff. The monthly rate shall be calculated using the formula included in Attachment O - SPS. The rate is recalculated each year, effective January 1, based on projected data, plus any applicable True-up Adjustment. Each month the Network Customer shall pay the Transmission Provider the product of the monthly rate specified on Schedules 7 and 8 and the Transmission Customer's Monthly Network Load determined in accordance with Section 34.2.

34.1.2 Monthly Demand Charge on the PSCo Transmission System: The Network Customer on the PSCo Transmission System shall pay a monthly demand charge pursuant to Schedule 13.

34.1.3 Monthly Demand Charge for Service across the Lamar Tie Line: The monthly demand charges for Network Integration Transmission Service under Part III of this Tariff across the Lamar Tie Line are set forth in Schedule 13A.

34.2 Determination of Network Customer's Monthly Network Load: The Network Customer's monthly Network Load is its hourly load (including its designated Network Load not physically interconnected with the Transmission Provider under Section 31.3) coincident with the Transmission Provider's Monthly Transmission System Peak. All capacity quantities used in developing the Network Customer's Monthly Network Load shall be adjusted to the transmission system input level, i.e., shall include the transmission capacity amount associated with any applicable losses.

34.3 Determination of Network Customer's Average Network Load on the SPS System: This section is applicable through December 31, 2008. The Network Customer's Average Network Load is the average of the Network Customer's Monthly Network Loads as defined in Section 34.2 for the previous calendar year. This value shall be calculated and become effective each February 1 through the following January 31. However, if the Network Customer taking service on the SPS system adds (loses) a new Network Load during such February 1 through January 31 period, the Network Customer's Average

Network Load for the months following the addition (loss) will be determined by including (excluding) the monthly coincident peak loads of the new (lost) Network Load for the previous calendar year. If such coincident peak load data are not available, the non-coincident peak load of the New Network Load for the previous calendar year will be used in such determination. All quantities used in calculating the Network Customer's network load shall be adjusted to the transmission system input level, i.e., shall include the transmission capacity amount associated with any applicable losses.

34.4 Determination of Transmission Provider's Monthly Transmission System Load on the SPS Transmission System: The Transmission Provider's Monthly Transmission System load is the Transmission Provider's Monthly Transmission System Peak minus the coincident peak usage of all Firm Point-To-Point Transmission Customers served pursuant to Part II of this Tariff or Part II of the Southwest Power Pool Open Access Transmission Tariff. All capacity quantities used in developing the Transmission Provider's Monthly Transmission System Peak shall be adjusted to the transmission system input level, i.e., shall include the transmission capacity amount associated with any applicable losses.

34.5 Reserved For Future Use

34.6 Determination of Transmission Provider's Average Transmission System Load on the SPS Transmission System: This section is applicable through December 31, 2008. The Transmission Provider's Average Transmission System load is the average of the Transmission Provider's monthly Transmission System loads as defined in Section 34.4 for the previous calendar year. This value shall be calculated and become effective each February 1 through the following January 31. All quantities used in calculating the Transmission Provider's monthly transmission system peak shall be adjusted to the transmission system input level, i.e., shall include the transmission capacity amount associated with any applicable losses.

34.7 Redispatch Charge: The Network Customer shall pay a Load Ratio Share of any redispatch costs allocated between the Network Customer and the Transmission Provider pursuant to Section 33. To the extent that the Transmission Provider incurs an obligation to the Network Customer for redispatch costs in accordance with Section 33, such amounts shall be credited against the Network Customer's bill for the applicable month.

34.8 Stranded Cost Recovery: The Transmission Provider may seek to recover stranded costs from the Network Customer pursuant to this Tariff in accordance with the terms, conditions and procedures set forth in FERC Order No. 888. However, the Transmission Provider must separately file any proposal to recover stranded costs under Section 205 of the Federal Power Act.

34.9 SPS Meter Charge: Effective July 6, 2008 through December 31, 2008, the Network Customer of SPS shall pay $69 per delivery point. Effective January 1, 2009, the Network Customer of SPS shall pay the monthly meter investment charge per delivery point as calculated annually in Attachment O – SPS. On a

monthly basis, the meter investment charge will be calculated by multiplying the number of delivery points of the Network Customer by the monthly meter investment charge calculated annually in Attachment O – SPS.

35 Operating Arrangements

35.1 Operation under The Network Operating Agreement: The Network Customer shall plan, construct, operate and maintain its facilities in accordance with Good Utility Practice and in conformance with the Network Operating Agreement.

35.2 Network Operating Agreement: The terms and conditions under which the Network Customer shall operate its facilities and the technical and operational matters associated with the implementation of Part III of the Tariff shall be specified in the Network Operating Agreement. The Network Operating Agreement shall provide for the Parties to (i) operate and maintain equipment necessary for integrating the Network Customer within the Transmission Provider's Transmission System (including, but not limited to, remote terminal units, metering, communications equipment and relaying equipment), (ii) transfer data between the Transmission Provider and the Network Customer (including, but not limited to, heat rates and operational characteristics of Network Resources, generation schedules for units outside the Transmission Provider's Transmission System, interchange schedules, unit outputs for redispatch required under Section 33, voltage schedules, loss factors and other real time data), (iii) use software programs required for data links and constraint dispatching, (iv) exchange data on forecasted loads and resources necessary for long-term planning, and (v) address any other technical and operational considerations required for implementation of Part III of the Tariff, including scheduling protocols. The Network Operating Agreement will recognize that the Network Customer shall either (i) operate as a Control Area under applicable guidelines of the Electric Reliability Organization (ERO) as defined in 18 C.F.R. § 39.1, (ii) satisfy its Control Area requirements, including all necessary Ancillary Services, by contracting with the Transmission Provider, or (iii) satisfy its Control Area requirements, including all necessary Ancillary Services, by contracting with another entity, consistent with Good Utility Practice, which satisfies the applicable reliability guidelines of the ERO. The Transmission Provider shall not unreasonably refuse to accept contractual arrangements with another entity for Ancillary Services. The Network Operating Agreement is included in Attachment G.

35.3 Network Operating Committee: A Network Operating Committee (Committee) shall be established to coordinate operating criteria for the Parties' respective responsibilities under the Network Operating Agreement. Each Network Customer shall be entitled to have at least one representative on the Committee. The Committee shall meet from time to time as need requires, but no less than once each calendar year.

IV. BALANCING AUTHORITY ANCILLARY SERVICES

Preamble

Service under Part IV shall be applicable only to the Public Service Company of Colorado (PSCo) system. This Part IV shall not apply to ancillary services that are provided pursuant to: (1) Part II or Part III of this Tariff; (2) a pre-Order No. 888 agreement providing for transmission service; or (3) a wholesale agreement (such as a wholesale sales service agreement) that includes payment to PSCo for Ancillary Services. Ancillary Service Customers shall compensate PSCo for ancillary services provided by the PSCo Balancing Authority.

36 Definitions

In addition to the Definitions and Terms set forth in the Common Service Provisions found in Part I of this Tariff, the following definitions shall apply to this Part IV, the Balancing Authority Services set forth in the Schedules and Attachment T of this Tariff:

36.1 Ancillary Service Customer (ASC): Any entity (or its Designated Agent) that (i) executes a Service Agreement, or (ii) requests in writing that the Balancing Authority Operator file with the Commission, a proposed unexecuted Service Agreement to receive Ancillary Services under Part IV of the Tariff.

36.2 Ancillary Service Load: The load that an Ancillary Service Customer designates for Ancillary Services under Part IV of the Tariff in the Service Agreement. The Ancillary Service Load shall include all load designated by the Ancillary Service Customer.

36.3 Balancing Authority Area (BAA): An electric power system or systems to which a common automatic generation control scheme is applied in order to: (1) match, at all times, the power output of the generators within the electric power system(s) and capacity and energy purchased from entities outside the electric power system(s), with the load within the electric power system(s); (2) maintain scheduled interchange with other Balancing Authority Areas, within the limits of Good Utility Practice; (3) maintain the frequency and voltage of the electric power system(s) within reasonable limits in accordance with Good Utility Practice; and (4) provide sufficient generating capacity to maintain operating reserves in accordance with Good Utility Practice. Balancing Authority Area shall have the same meaning as a Control Area, as defined in Section 1.7.

36.4 Balancing Authority (BA) Operator: PSCo, the entity managing or operating a BA with the responsibility to monitor and control that BA in real time in accordance with the responsibilities defined for a BA by NERC and/or WECC. The term Balancing Authority Operator shall have the same meaning as the term Control Area Operator, as used in Parts II and III and the Schedules to this Tariff.

36.5 Balancing Authority (BA) Services: The ancillary services necessary to support the transmission of capacity and energy from generating units to loads and to maintain reliability within the PSCo BAA. BA Services include: (i) Scheduling, System Control, and Dispatch Service as provided in Schedule 1 to this Tariff; (ii) Reactive Supply and Voltage Control from Generation Sources as specified in Schedule 2; (iii) Regulation and Frequency Response Service as specified in Schedule 3; (iv) Energy Imbalance Service as specified in Schedule 4; (v) Operating Reserve—Spinning Reserve Service as specified in Schedule 5; (vi) Operating Reserve—Supplemental Reserve Service as specified in Schedule 6; (vii) Flex Reserve Service as specified in Schedule 16; (viii) Generator Imbalance service as specified in Schedule 9; and real power losses.

36.6 **Internal Transmission Owner (ITO):** Any entity other than PSCo that owns Bulk Transmission Facilities within the PSCO BAA that is not a Transmission Customer under Parts II or III of this OATT or pursuant to a GFA.

36.7 **Load Serving Entity (LSE):** An entity within the PSCo BAA providing electric service at retail. An LSE may be either an investor-owned utility, a cooperative, or a municipal utility.

36.8 **Reserved Capacity:** The hourly peak demand on the Internal Transmission Owner's system. Reserved Capacity shall be expressed in terms of whole megawatts on a sixty (60) minute interval (commencing on the clock hour) basis.

36.9 **RMRG:** the Rocky Mountain Reserve Sharing Group, the reserve sharing group for the PSCo BAA.

36.10 **WECC:** the Western Electricity Coordination Council, the Regional Entity and Regional Reliability Coordinator for the PSCo BAA.

37 Nature of Balancing Authority Services

37.1 Requirement to Provide and Obtain BA Services: An Ancillary Service Customer (ASC) shall purchase from the BA Operator, self-provide, or purchase from a third party BA Services for all load or generating units in the PSCo BAA. The ASC shall obtain BA Services pursuant to the rates, terms, and conditions specified in this Part IV and the provisions of the Service Agreement set forth as Attachment T of this Tariff.

37.2 Source and Acquisition of BA Services:

(a) The BA Operator shall provide and the ASC is required to purchase Scheduling, System Control, and Dispatch Service as provided in Schedule 1 to this Tariff.

(b) The BA Operator shall also offer to provide the following BA Services: (i) Reactive Supply and Voltage Control from Generation Sources as specified in Schedule 2 to this Tariff; (ii) Regulation and Frequency Response Service as specified in Schedule 3; (iii) Energy Imbalance Service as specified in Schedule 4; (iv) Operating Reserve—Spinning Reserve Service as specified in Schedule 5; (v) Operating Reserve—Supplemental Reserve Service as specified in Schedule 6; (vi) Flex Reserve Service as specified in Schedule 16; (vii) Generator Imbalance service as specified in Schedule 9, and (viii) real power losses.

(c) The ASC shall designate the BA Services to be provided by the BA Operator in the service agreement between the ASC and BA Operator, in the form provided in Attachment T. The ASC must acquire such BA Services from the BA Operator unless the ASC demonstrates to the satisfaction of the BA Operator that the ASC has acquired such BA Services from another source, either by self-providing or purchasing from a third party.

(d) Each ASC subject to this Part IV must specify on the Service Agreement set forth in Attachment T and required under this Part IV (a) those BA Services the ASC will purchase from the BA Operator, and (b) the loads designated for such BA services. If the Balancing Authority Operator and Ancillary Service Customer disagree on the load to be designated as subject to Part IV, the Balancing Authority Operator shall file the unexecuted Service Agreement with the Commission.

(e) Each ASC subject to this Part IV must provide an attestation annually that specifies the amounts of VER generation and non-VER generation owned or controlled by the ASC.

37.3 Sufficiency of Balancing Authority Services: The BA Operator shall determine the sufficiency of any BA Service obtained by an ASC pursuant to

the requirements of this Part IV. In the event of a dispute, the Dispute Resolution provisions of Section 12 shall apply.

37.4 **Real Power Losses:** Real Power Losses are associated with all transmission transactions scheduled by ASCs within the PSCo BAA. The BA Operator is not obligated to provide Real Power Losses. The ASC is responsible for replacing losses associated with all BA Services as calculated by the BA Operator. The ASC's Real Power Loss obligation will be determined based on the location of the ASC's metered points on the transmission system; however, the exact identification of loss obligations for ASC's will be determined at the time the ASC's form of service agreement is executed. The ASC will be charged for Real Power Losses on all transactions that are delivered across the BAA to serve the ASC's load, less any losses supplied to the BA or billed to the ASC under Part II or Part III of this Joint OATT or pursuant to any other agreement. The applicable Real Power Losses are as follows

For Service in the PSCo BAA:	Demand	Energy
	2.52%	1.87%

37.5 **Service Agreements:** The BA Operator shall offer a standard form of Service Agreement to an ASC, as set forth in Attachment T to this Tariff. An executed Service Agreement completed consistent with the requirements of this Part IV will be reported to the Commission in compliance with applicable Commission regulations. If an ASC does not execute the Service Agreement required by this Part IV, the BA Operator may file an unexecuted Service Agreement with the Commission. The BA Operator shall file any unexecuted Service Agreement with the Commission by the earlier of (i) thirty (30) days after receiving a request from the ASC to file an unexecuted Service Agreement or (ii) thirty (30) days after service commences.

37.6 **No Transmission Service Provided:** The provision of BA Services under this Part IV does not include or constitute a commitment by Transmission Provider to provide any other type of Service under this Tariff.

38 Authority and Obligations Version: 0.0.0 Effective: 7/30/2010

38 Authority and Obligations

38.1 BA Operator Authority: The BA Operator, consistent with Good Utility Practice, shall have all necessary authority to take whatever action the BA Operator deems necessary, including giving orders to the ASC to: (1) preserve the public health, safety, and welfare; (2) preserve the reliability of the PSCo BAA and Transmission System; (3) limit or prevent damage to the PSCo BAA and Transmission System; and (4) expedite the restoration of electric service within the PSCo BAA. The BA Operator shall use reasonable efforts to minimize the effect of such actions or interactions on the ASC.

38.2 ASC Obligations: The ASC shall operate (1) in a safe and reliable manner; (2) in accordance with Good Utility Practice; (3) in accordance with applicable operational and/or reliability criteria, protocols, and directives, including those of the BA Operator, WECC, or NERC; and (4) in accordance with the provisions of this Tariff.

39 Metering Version: 0.0.0 Effective: 7/30/2010

39 Metering

39.1 ASC Obligations:

(a) The ASC shall make arrangements for or provide, install, operate, and maintain suitable metering equipment as necessary to meet its obligations under this Part IV, including the provisions of any applicable Service Agreements and appropriate interconnection agreement arrangements, but shall provide for compliance with the requirements set forth below. Unless otherwise agreed to in writing by the BA Operator, suitable metering equipment installed after the effective date of this Part IV shall include revenue quality electric meters that are in accordance with the American National Standards Institute C12 standards, potential and current transformers, and such other appurtenances and software as are necessary to give an automatic record of kilowatt-hours for each clock hour. The equipment shall be capable of storing metering data for at least 30 days and of providing reading(s) on demand. When there is a possibility of flows of electricity in either direction, metering equipment shall be installed to provide metering data for each direction of flow. The timing devices of all meters having such devices shall be maintained in time synchronism as closely as practicable with prevailing time.

(b) Notwithstanding the foregoing, if an ASC has metering equipment in place and in operation as of the effective date of this Part IV which meets NERC and/or relevant industry standards, the ASC may continue to use such equipment as long as such equipment continues to meet NERC and/or relevant industry standards. The BA Operator shall not be responsible for any costs associated with such metering equipment, the installation of such equipment, or any changes thereto.

39.2 **Metering Data**: The ASC shall demonstrate to the BA Operator that all metering equipment, data acquisition facilities, communication equipment and associated equipment necessary to provide the metered data to the BA Operator has been installed by the ASC in accordance with Good Utility Practice and consistent with applicable WECC and/or NERC standards. The ASC (or its designee) shall read meters to provide information required by the BA Operator by the fifth day after the end of the billing month unless otherwise notified by the BA Operator. If hourly energy readings are requested by the BA Operator, the ASC shall report such information to the BA Operator by telephone or electronically or as the Parties otherwise agree, on a schedule agreed to by the Parties. Metering quantities shall be provided to the BA Operator or the ASC upon request. The ASC shall be responsible for any costs associated with the administration of metering equipment and the provision of metering data.

39.3 **Testing**: Metering equipment shall be tested at the ASC's expense for suitable intervals and its accuracy of registration shall be maintained in accordance with standards specified in the Service Agreement. On request of either Party, a special test of the metering may be made. If the meter's parameters are found

to be outside the acceptable limits determined in accordance with the Service Agreement, the owner of the meter will be responsible for the cost of the special test. Representatives of both Parties, and representatives of any applicable interconnection arrangement shall be afforded an opportunity to be present at all routine or special tests and upon occasions when any readings, for purposes of settlements, are taken from meters not bearing an automatic record.

39.4 **Meter Failure**: Should a meter installed at an ASC's facility fail to register during any period of time, the sum of delivered or received energy at the meter point during such period shall be estimated jointly by the BA Operator and the other party, in cooperation with each other, based on the best available information.

39.5 **Billing Adjustments**: If at any time, any metering equipment is found to be outside its acceptable limits as determined under Section 39.1, such metering equipment shall be made operable or accurate or replaced by the ASC at the ASC's expense. Meter readings and billings for the period of the inaccuracy shall be adjusted insofar as the extent of the meter inaccuracy can be reasonably ascertained. If the period of inaccuracy cannot be reasonably ascertained, the inaccuracy shall be corrected for the ninety (90) day period immediately proceeding the day of the test. Each Party shall comply with any reasonable request of the other Party concerning the sealing of the meters, the presence of a representative of the other Party when the seals are broken and the tests are made, and other matters affecting the accuracy of the measurement of electricity delivered from or to the ASC.

39.6 **Examination of Records**: The BA Operator and ASC shall have the right, during normal business hours, to examine accounting and other relevant records of the other Party relating to services or activities under this Part IV, and shall have the right to make reasonable audits and copies of such records. Such examinations shall be at the expense of the party requesting such examination.

39.7 **BA Operator Access to Metering Data**: The BA Operator shall have access to any data, which may reasonably be required to facilitate measurements and billing under the Service Agreement.

40 Billing Version: 0.1.1 Effective: 1/1/2015

40 Billing

(a) The ASC will be charged for Ancillary Services in a manner that is consistent with the manner in which Network Integration Transmission Service customers are charged for Ancillary Services under Part III of the Joint OATT. The monthly charges to ASCs for Ancillary Services rendered under Schedules 1, 2, 3, 5, and 6 of the Joint OATT shall be determined based on the electrical demand recorded at the ASC's meter(s) at which such services are provided under Part IV of the Joint OATT, coincident with the PSCo peak hour in that month, less any Ancillary Services billed under Part II or Part III of this Joint OATT or any pre-existing transmission service or wholesale agreement providing for delivery of Ancillary Services to the ASC's load for that month. Schedules 4 and 9 will be calculated hourly based on the scheduled amount versus actual energy flow. Schedule 16 will be calculated based on the installed nameplate capacity of wind generation owned or controlled by the ASC.

(b) The ASC shall be billed for Real Power Losses on all transactions that are delivered across the BAA to serve the ASC's load. The total amount billed to a customer for Real Power Losses under Parts II, III and IV of this Joint OATT or pursuant to any pre-existing transmission service or wholesale agreement shall not exceed the total amount of losses attributable to such customer's total demand in such billing month.

(c) If the ASC does not provide required metered load information by the 5th day after the end of a billing month pursuant to Section 39.2, PSCo may bill such customer on an estimated billing basis, with a true-up correction to actual metered loads on the next monthly bill.

Part V Joint Dispatch Trans Svc Version: 0.0.0 Effective: 1/1/2016

V. JOINT DISPATCH TRANSMISSION SERVICE (Applicable to Public Service Company of Colorado only)

Preamble

Service under Part V shall be applicable only to load serving entities in the PSCo Balancing Authority Area that are signatories to a Joint Dispatch Agreement (JDA) under which: (1) participating generating resources of the parties are dispatched as a pool on a least-cost basis respecting transmission limitations; (2) the Joint Dispatch Transmission Service Customers' respective transmission service providers have provided within their OATT a transmission service schedule for energy dispatched pursuant to the JDA at a rate equal to zero dollars on a non-firm, as-available basis with the lowest curtailment priority, pursuant to the provisions of this Part V of the Tariff.

41 Definitions Version: 0.0.0 Effective: 1/1/2016

41 Definitions

In addition to the Definitions and Terms set forth in the Common Service Provisions found in Part 1 of this Tariff, the following definitions shall apply to this Part V, the Joint Dispatch Services set forth in Schedule 15 and Attachment V of this Tariff.

41.1 Joint Dispatch Arrangement: An operating arrangement whereby participating generation resources owned, operated or controlled by load serving entities within the PSCo Balancing Authority Area are dispatched as a pool on a least-cost basis respecting transmission limitations in order to economically optimize dispatch on an aggregate real-time basis among all participants in the Joint Dispatch Arrangement.

41.2 Joint Dispatch Agreement: An agreement detailing the rights and obligations of participants in a Joint Dispatch Arrangement.

41.3 Joint Dispatch Transmission Service: Non-firm transmission service across transmission facilities of the Transmission Provider that is used to transmit energy dispatched pursuant to a Joint Dispatch Agreement and that is subject to the provisions of this Part V of the Tariff. Joint Dispatch Transmission Service will be made available from posted ATC after procurement and scheduling deadlines have passed for the current operating hour, as specified in the Transmission Provider's Business Practices posted on OASIS.

41.4 Service Agreement for Joint Dispatch Transmission Service ("Service Agreement"): An agreement between the Transmission Provider and a Joint Dispatch Transmission Service Customer for Joint Dispatch Transmission Service.

41.5 Joint Dispatch Transmission Service Customer: Any entity (or its Designated Agent) that: (i) executes a Service Agreement; or (ii) requests in writing that the Transmission Provider file with the Commission a proposed unexecuted Service Agreement.

42 Nat of Joint Dispatch Trans Svc Version: 0.0.0 Effective: 1/1/2016

42 Nature of Joint Dispatch Transmission Service

Joint Dispatch Transmission Service is an optional service available to any load serving entity in the PSCo Balancing Authority Area that: (1) has entered into a Joint Dispatch Agreement; and (2) makes Joint Dispatch Transmission Service on its transmission system, if any, available to PSCo and all other parties to the Joint Dispatch Agreement at the same rate, terms, and conditions as set out in this Part V of the Tariff and related schedules and attachments. As further detailed herein, Joint Dispatch Transmission Service may only be used to deliver energy dispatched under a Joint Dispatch Agreement to the entity's wholesale and retail native load customers. Joint Dispatch Transmission Service is provided only on a non-firm, as available basis and has the lowest curtailment priority.

42.1 Limited Transmission Provider Responsibilities. The Transmission Provider shall have the obligation to operate its Transmission System in accordance with Good Utility Practice. For purposes of Joint Dispatch Transmission Service, the Transmission Provider shall have no obligation to plan, construct, or maintain its Transmission System for the benefit of any Joint Dispatch Transmission Service Customer.

42.2 Real Power Losses. Real Power Losses are associated with all transmission service. The Joint Dispatch Transmission Service Customer shall be responsible for all losses associated with Joint Dispatch Transmission Service, which responsibility shall be manifested as the difference between the amount of energy dispatched on behalf of the Joint Dispatch Transmission Service Customer and the amount of energy actually delivered to such customer based on the following loss factors.

Seller Buyer	PRPA	PSCo	BHCE
PRPA		PSCo	PSCo+BHCE
PSCo	PRPA		BHCE
BHCE	PRPA+PSCo	PSCo	

Where:
PRPA= Loss Factor set forth in PRPA's OATT Section 15.7
PSCo=Loss Factor set forth in PSCo OATT Section 15.7
BHCE= Loss Factor set forth in BHCE OATT Section 15.7

42.3 Restrictions on Use of Service. The Joint Dispatch Transmission Service Customer shall not use Joint Dispatch Transmission Service for (i) off-system sales of capacity or energy or (ii) direct or indirect provision of transmission service by the Joint Dispatch Transmission Service Customer to any third party. Joint Dispatch Transmission Service may be used only for receipt or delivery of energy dispatched within the PSCo Balancing Authority Area on a non-firm basis to serve wholesale or retail native load of any participant in a Joint Dispatch Agreement.

42.4 Imbalance Service. The purpose of the Joint Dispatch Arrangement is to balance loads and resources of the parties by optimizing dispatch of the parties' resources. As a result, the Transmission Provider shall not assess energy imbalance charges under Ancillary Service Schedule 4 or 9 to any Joint Dispatch Transmission Service Customer.

43 Initiating Service

43.1 Condition Precedent for Receiving Service. Subject to the terms and conditions of this Part V of the Tariff, and related schedules and attachments, the Transmission Provider will provide Joint Dispatch Transmission Service to any eligible customer, provided that (i) the eligible customer has wholesale or retail native load in the Transmission Provider's Balancing Authority area; (ii) the eligible customer has entered into a Joint Dispatch Agreement; (iii) the eligible customer's transmission provider has a transmission service tariff offering Joint Dispatch Transmission Service on the same terms and conditions as offered under this Part V of the Tariff, and related schedules and attachments; and (iv) the eligible customer executes a Service Agreement pursuant to Attachment V for service under this Part V of the Tariff or requests in writing that the Transmission Provider file a proposed unexecuted Service Agreement with the Commission.

43.2 Application Procedures. An Eligible Customer requesting service under Part V of this Tariff must submit an application containing the information specified below. No deposit or credit evaluation is necessary to obtain Joint Dispatch Network Transmission Service. Further, no transmission studies shall be required to obtain Joint Dispatch Transmission Service because such service is provided only on a non-firm, as available basis. Applications should be submitted to the Transmission Provider via e-mail to the person(s) listed on OASIS. Application contents:

(i) The identity, address, telephone number and facsimile number of the party requesting service;
(ii) A statement that the party requesting service is, or will be upon commencement of service, an Eligible Customer under the tariff;
(iii) A statement that the party requesting service has, or will have upon commencement of service, wholesale or retail native load in the PSCo Balancing Authority;
(iv) A statement that the party requesting service has, or will have upon commencement of service, entered into a Joint Dispatch Agreement with PSCo;
(v) A statement that the party requesting service has, or will have upon commencement of service, a tariff offering Joint Dispatch Transmission Service at the same rates, terms, and conditions as this Part V of the Tariff and associated schedules and attachments;
(vi) Service Commencement Date and the term of the requested Joint Dispatch Transmission Service;
(vii) A statement signed by an authorized officer from or agent of the Joint Dispatch Transmission Service Customer attesting that Joint Dispatch Transmission Service will be used only for receipt or delivery of energy dispatched under a Joint Dispatch Agreement for the benefit of the customer's wholesale and retail native load customers;
(viii) Service is conditioned on the Transmission Service Provider being in receipt of an executed Joint Dispatch Agreement.

Unless the Parties agree to a different timeframe, the Transmission Provider must acknowledge the request within ten (15) days of receipt. The acknowledgement must include a date by which a response, including a Service Agreement, will be sent to the Eligible Customer. If an application fails to meet the requirements of this section, the Transmission Provider shall notify the Eligible Customer requesting service within fifteen (15) days of receipt and specify the reasons for such failure. Wherever reasonably possible, the Transmission Provider will attempt to remedy deficiencies in the Application through informal communications with the Eligible Customer. If efforts are unsuccessful, the Transmission Provider shall return the Application, without prejudice to the Eligible Customer filing a new or revised Application that fully complies with the requirements of this section.

43.3 Joint Dispatch Transmission Customer Facilities: The Joint Dispatch Transmission Service Customer's transmission provider will retain its existing obligations to plan, construct, operate and maintain its transmission system using standard utility practices.

43.4 Filing of Service Agreement. The Transmission Provider will file Service Agreements with the Commission in compliance with applicable Commission regulations, if any.

SCHEDULE 1

Scheduling, System Control and Dispatch Service

This service is required to schedule the movement of power through, out of, within, or into a Control Area. This service can be provided only by the operator of the Control Area in which the transmission facilities used for transmission service are located.

(a) In the case of service under Part II or III of this Tariff, Scheduling, System Control and Dispatch Service is to be provided directly by the Transmission Provider (if the Transmission Provider is the Control Area operator) or indirectly by the Transmission Provider making arrangements with the Control Area operator that performs this service for the Transmission Provider's Transmission System. The Transmission Customer must purchase this service from the Transmission Provider or the Control Area operator. To the extent the Control Area operator performs this service for the Transmission Provider, charges to the Transmission Customer are to reflect only a pass-through of the costs charged to the Transmission Provider by that Control Area operator.

(b) In the case of service provided under Part IV of this Tariff, Scheduling, System Control and Dispatch Service is to be provided directly by the Balancing Authority Operator to the Ancillary Services Customer. The Ancillary Services Customer must purchase this service from the Balancing Authority Operator for all load pursuant to this Schedule 1 except load for which the Balancing Authority Operator currently bills such service under Part II or Part III of this Joint OATT or any pre-existing transmission service or other wholesale agreement.

Service by Multiple Operating Companies:

When a Transmission Customer requires transmission service for a specific transaction over any two, or all three of the NSP Transmission System, the PSCo System, or the SPS Transmission System, the applicable rate for Scheduling, System Control and Dispatch Service shall be the rate of the Transmission Provider which provides delivery to the load or out of the Xcel System. However, the Transmission Customer shall be responsible for arranging and paying for the use of any intervening third party transmission system.

Service by Northern States Power Companies:

The charges for Scheduling, System Control and Dispatch Service are to be based on the rates set forth below.

1)	Monthly Point-To-Point Delivery:	$0.068/kW-month of Reserved Capacity
2)	Weekly Point-To-Point Delivery:	$0.016/kW-week of Reserved Capacity
3)	Daily Point-To-Point Delivery:	$0.0022/kW-day of Reserved Capacity
4)	Hourly Point-To-Point Delivery:	$0.093/MWh of Reserved Capacity
5)	Network Integration Delivery:	$0.068/kW-month of Network Load

The total demand charge in any day, pursuant to a reservation for Hourly delivery, shall not exceed the rate specified in section (3) above times the highest amount in kilowatts

of Reserved Capacity in any hour during such day. In addition, the total demand charge in any week, pursuant to a reservation for Hourly or Daily delivery, shall not exceed the rate specified in section (2) above times the highest amount in kilowatts of Reserved Capacity in any hour during such week.

Service by Public Service Company of Colorado:

The charges for Scheduling, System Control and Dispatch Service are to be based on the rates set forth below, as found in Attachment O – PSCo of this Tariff.

6) Monthly Point-To-Point Delivery: the amount identified on Table 2, line 27 of the PSCo formula rate/kW-month of Reserved Capacity
7) Weekly Point-To-Point Delivery: the amount identified on Table 2, line 28 of the PSCo formula rate /kW-week of Reserved Capacity
8) Daily Point-To-Point Delivery: the amount identified on Table 2, line 29 of the PSCo formula rate /kW-day of Reserved Capacity
9) Hourly Point-To-Point Delivery: the amount identified on Table 2, line 30 of the PSCo formula rate /MWh of Reserved Capacity
10) Network Integration Delivery: the amount identified on Table 2, line 31 of the PSCo formula rate /kW-month of Network Load
11) Ancillary Services Delivery: the amount identified on Table 2, line 32 of the PSCo formula rate /kw-month of Ancillary Service Load

The total demand charge in any day, pursuant to a reservation for Hourly delivery, shall not exceed the rate specified in section (8) above times the highest amount in kilowatts of Reserved Capacity in any hour during such day. In addition, the total demand charge in any week, pursuant to a reservation for Hourly or Daily delivery, shall not exceed the rate specified in section (7) above times the highest amount in kilowatts of Reserved Capacity in any hour during such week. The total demand charge for Ancillary Services Delivery shall be determined based on the electrical demand recorded at the Ancillary Service Customer's meter(s) at which such services are provided under Part IV of the Joint OATT, coincident with the PSCo peak hour in that month.

Service by Southwestern Public Service Company:

The charges for Scheduling, System Control and Dispatch Service are to be up to the rates set forth below. Beginning July 6, 2008 through December 31, 2008, the following rates for the SPS Transmission System will be in effect:

12) Monthly Point-To-Point Delivery: $0.039/kW-month of Reserved Capacity
13) Weekly Point-To-Point Delivery: $0.009/kW-week of Reserved Capacity
14) Daily Point-To-Point Delivery: $0.001/kW-day of Reserved Capacity
15) Hourly Point-To-Point Delivery: $0.054/MWh of Reserved Capacity
16) Network Integration Delivery: $0.039/kW-month of Network Load

Beginning January 1, 2009, the following rates for the SPS Transmission System will be in effect:

17) Monthly Point-To-Point Delivery: the amount identified on page 12 line 11 of the SPS formula rate/kW-month of Reserved Capacity
18) Weekly Point-To-Point Delivery: the amount identified on page 12 line 12 of the SPS formula rate/kW-week of Reserved Capacity

19) Daily Point-To-Point Delivery: the amount identified on page 12 line 13 of the SPS formula rate/kW-day of Reserved Capacity
20) Hourly Point-To-Point Delivery: the amount identified on page 12 line 14 of the SPS formula rate/MWh of Reserved Capacity
21) Network Integration Delivery: the amount identified on page 12 line 11 of the SPS formula rate/kW-month of Network Load

The charges shall be subject to change in accordance with the associated implementation procedures set forth in Appendix 1 of Attachment O – SPS of this tariff.

The total demand charge in any day, pursuant to a reservation for Hourly delivery, shall not exceed the Daily Point-To-Point Delivery rate specified above times the highest amount in kilowatts of Reserved Capacity in any hour during such day. In addition, the total demand charge in any week, pursuant to a reservation for Hourly or Daily delivery, shall not exceed the Weekly Point-To-Point Delivery rate specified above times the highest amount in kilowatts of Reserved Capacity in any hour during such week.

2 Reactive Supply and Voltage Control from Gen Sources Service Version: 0.1.1 Effective: 11/17/2012

SCHEDULE 2

Reactive Supply and Voltage Control from Generation Or Other Sources Service

In order to maintain transmission voltages on the Transmission Provider's transmission facilities and within the Transmission Provider's Control Area within acceptable limits, generation facilities and non-generation resources capable of providing this service that are under the control of the control area operator are operated to produce (or absorb) reactive power. Thus, Reactive Supply and Voltage Control from Generation or Other Sources Service must be provided for each transaction on the Transmission Provider's transmission facilities and Ancillary Service Customers within the Transmission Provider's Control Area. The amount of Reactive Supply and Voltage Control from Generation or Other Sources Service that must be supplied with respect to the Transmission Customer's transactions or the Ancillary Service Customer's transactions will be determined based on the reactive power support necessary to maintain transmission voltages within limits that are generally accepted in the region and consistently adhered to by the Transmission Provider and Balancing Authority Operator.

(a) In the case of service under Parts II or III of this Tariff, Reactive Supply and Voltage Control from Generation or Other Sources Service is to be provided directly by the Transmission Provider (if the Transmission Provider is the Control Area operator) or indirectly by the Transmission Provider making arrangements with the Control Area operator that performs this service for the Transmission Provider's Transmission System. The Transmission Provider must provide and the Transmission Customer must purchase this service from the Transmission Provider. Although the Transmission Customer is required to take this ancillary service from the Transmission Provider, the Transmission Customer may reduce the charge for this service to the extent the Transmission Customer can reduce its requirement for reactive supply. To the extent the Control Area operator performs this service for the Transmission Provider, charges to the Transmission Customer are to reflect only a pass-through of the costs charged to the Transmission Provider by the Control Area operator.

(b) In the case of service under Part IV of this Tariff, Reactive Supply and Voltage Control from Generation or Other Sources Service is to be provided directly by the Balancing Authority Operator (BA Operator) to the Ancillary Service Customer (ASC). The BA Operator must provide and the ACS must purchase this service. Although the ASC is required to take this service from the BA Operator, the ASC may reduce the charge for this service to the extent the ASC can reduce its requirement for reactive supply.

<u>Service by Northern States Power Companies:</u>

The charges for Reactive Supply and Voltage Control from Generation or Other Sources Service are to be based on the rates set forth below.

1)	Monthly Point-To-Point Delivery:	$0.093/kW-month of Reserved Capacity
2)	Weekly Point-To-Point Delivery:	$0.0121/kW-week of Reserved Capacity

3) Daily Point-To-Point Delivery:
On-Peak: $0.004/kW-day of Reserved Capacity
Off-Peak: $0.003/kW-day of Reserved Capacity
4) Hourly Point-To-Point Delivery:
On-Peak: $0.226/MWh of Reserved Capacity
Off-Peak: $0.127/MWh of Reserved Capacity
5) Network Integration Delivery: $0.093/kW-month of Network Load

The total demand charge in any day, pursuant to a reservation for Hourly delivery, shall not exceed the rate specified in section (3) above times the highest amount in kilowatts of Reserved Capacity in any hour during such day. In addition, the total demand charge in any week, pursuant to a reservation for Hourly or Daily delivery, shall not exceed the rate specified in section (2) above times the highest amount in kilowatts of Reserved Capacity in any hour during such week.

Service by Public Service Company of Colorado:

The charges for Reactive Supply and Voltage Control from Generation or Other Sources Service are to be based on the rates set forth below, as found in Attachment O – PSCo of this Tariff.

6) Monthly Point-To-Point Delivery: the amount identified on Table 2, line 35 of the PSCo formula rate /kW-month of Reserved Capacity
7) Weekly Point-To-Point Delivery: the amount identified on Table 2, line 36 of the PSCo formula rate /kW-week of Reserved Capacity
8) Daily Point-To-Point Delivery: the amount identified on Table 2, line 37 of the PSCo formula rate /kW-day of Reserved Capacity
9) Daily Point-To-Point Delivery off peak: the amount identified on Table 2, line 38 of the PSCo formula rate /kW-day of Reserved Capacity
10) Hourly Point-To-Point Delivery: the amount identified on Table 2, line 39 of the PSCo formula rate /MWh of Reserved Capacity
11) Hourly Point-To-Point Delivery off peak: the amount identified on Table 2, line 40 of the PSCo formula rate /kW-day of Reserved Capacity
12) Network Integration Delivery: the amount identified on Table 2, line 41 of the PSCo formula rate /kW-month of Network Load
13) Ancillary Service Delivery: the amount identified on Table 2, line 42 of the PSCo formula rate /kW-month of Ancillary Service Load

The total demand charge in any day, pursuant to a reservation for Hourly delivery, shall not exceed the rate specified in section (8) above times the highest amount in kilowatts of Reserved Capacity in any hour during such day. In addition, the total demand charge in any week, pursuant to a reservation for Hourly or Daily delivery, shall not exceed the rate specified in section (7) above times the highest amount in kilowatts of Reserved Capacity in any hour during such week.

Service by Southwestern Public Service Company:

The charges for Reactive Supply and Voltage Control from Generation or Other Sources Service are to be up to the rates set forth below.

12)	Monthly Point-To-Point Delivery:	$0.101/kW-month of Reserved Capacity
13)	Weekly Point-To-Point Delivery:	$0.023/kW-week of Reserved Capacity
14)	Daily Point-To-Point Delivery:	
	On-Peak:	$0.004/kW-day of Reserved Capacity
	Off-Peak:	$0.003/kW-day of Reserved Capacity
15)	Hourly Point-To-Point Delivery:	
	On-Peak:	$0.243/MWh of Reserved Capacity
	Off-Peak:	$0.139/MWh of Reserved Capacity
16)	Network Integration Delivery:	$0.101/kW-month of Network Load

On-Peak is all hours between HE 0700 and HE 2200, inclusive, Central Time Zone, excluding Sundays and holidays. Holidays shall be as defined by NERC, currently New Year's Day, Memorial Day, Independence Day, Labor Day, Thanksgiving Day, and Christmas Day. Off-Peak is all hours not designated as On-Peak.

The total demand charge in any day, pursuant to a reservation for Hourly delivery, shall not exceed the rate specified in section (14) above times the highest amount in kilowatts of Reserved Capacity in any hour during such day. In addition, the total demand charge in any week, pursuant to a reservation for Hourly or Daily delivery, shall not exceed the rate specified in section (13) above times the highest amount in kilowatts of Reserved Capacity in any hour during such week.

Service by Multiple Operating Companies:

When a Transmission Customer requires transmission service for a specific transaction over any two or all three of the NSP Transmission System, the PSCo System, or the SPS Transmission System, the applicable rate for Reactive Supply and Voltage Control from Generation or Other Sources Service shall be the rate of the Transmission Provider which provides delivery to the load or out of the Xcel System. However, the Transmission Customer shall be responsible for arranging and paying for the use of any intervening third party transmission system.

SCHEDULE 3

Regulation and Frequency Response Service

Regulation and Frequency Response Service is necessary to provide for the continuous balancing of resources (generation and interchange) with load and for maintaining scheduled Interconnection frequency at sixty cycles per second (60 Hz). Regulation and Frequency Response Service is accomplished by committing on-line generation whose output is raised or lowered (predominantly through the use of automatic generating control equipment) and by other non-generation resources capable of providing this service as necessary to follow the moment-by-moment changes in load.

(a) In the case of service under Parts II or III of this Tariff, the obligation to maintain this balance between resources and load lies with the Transmission Provider (or the Balancing Authority Area operator that performs this function for the Transmission Provider). The Transmission Provider must offer this service when the transmission service is used to serve load within its Balancing Authority Area. The Transmission Customer must either purchase this service from the Transmission Provider or make alternative comparable arrangements to satisfy its Regulation and Frequency Response Service obligation. The Transmission Provider will take into account the speed and accuracy of regulation resources in its determination of Regulation and Frequency Response reserve requirements, including as it reviews whether a self-supplying Transmission Customer has made alternative comparable arrangements. Upon request by the self-supplying Transmission Customer, the Transmission Provider will share with the Transmission Customer its reasoning and any related data used to make the determination of whether the Transmission Customer has made alternative comparable arrangements. The amount of and charges for Regulation and Frequency Response Service are set forth below.

(b) In the case of service under Part IV of this Tariff, the obligation to maintain the balance between resources and loads lies with the Balancing Authority Operator (BA Operator). The BA Operator must offer this service for Ancillary Service Customers (ASCs) within the Balancing Authority Area. The ASC must either purchase this service from the BA Operator or make alternative comparable arrangements to satisfy the ASC's Regulation and Frequency Response Service obligation.

(c) Dynamic Scheduling is a means to satisfy the regulation and frequency response function through an alternate comparable arrangement. The Transmission Customer or Ancillary Service Customer will be allowed to use dynamic scheduling when it is feasible and reliable. Dynamic scheduling involves the arrangement for moving generation or load served within one Balancing Authority Area, such that the generation or load is recognized in the real-time control and dispatch of another Balancing Authority Area. Under dynamic scheduling, the operator of a host Balancing Authority Area agrees to assign certain customer generation or load to an attaining Balancing Authority

Area, and send the associated control signals to balance variability of the assigned generation and load along with its other balancing obligations. Dynamic scheduling is implemented through the use of specific telemetry and control equipment. If the Transmission Provider or BA Operator supplies dynamic scheduling service to the Transmission Customer or Ancillary Service Customer, such charges will be developed at such time as service is requested.

Service by Public Service Company of Colorado:

The Network Integration Service Customer, Ancillary Service Customer, or customer using Point-to-Point Transmission Service from PSCo to serve load in the PSCo Balancing Authority Area shall pay a Regulation and Frequency Response Service charge under this tariff based on the sum of the charges applicable to the customer's Load, Non-Variable Energy Resources, and Variable Energy Resources, as determined below. Transmission Customers taking Point-to-Point Transmission Service for delivery to a Point of Delivery external to the PSCo Balancing Authority Area shall pay a Regulation and Frequency Response Service Charge under Schedule 3A. The Transmission Provider may not charge a Transmission Customer for service under both Schedule 3 and Schedule 3A for the same transaction.

(a) Load

The charges for Regulation and Frequency Response Service are to be based on the rates set forth below, as found in Attachment O – PSCo of this Tariff.

1) Monthly Point-To-Point Delivery: the amount identified on Table 2, line 46 load column of the PSCo formula rate /kW-month
2) Weekly Point-To-Point Delivery: the amount identified on Table 2, line 47 load column of the PSCo formula rate /kW-week
3) Daily Point-To-Point Delivery: the amount identified on Table 2, line 48 load column of the PSCo formula rate /kW-day
4) Daily Point-To-Point Delivery off peak: the amount identified on Table 2, line 49 load column of the PSCo formula rate /kW-day
5) Hourly Point-To-Point Delivery: the amount identified on Table 2, line 50 load column of the PSCo formula rate /MWh
6) Hourly Point-To-Point Delivery off peak: the amount identified on Table 2, line 51 load column of the PSCo formula rate /MWh
7) Network Integration Delivery: the amount identified on Table 2, line 52 load column of the PSCo formula rate /kW-month
8) Ancillary Services Delivery the amount identified on Table 2, line 53 load column of the PSCo formula rate /kW-month

b) Non-Variable Energy Resources

The charges for Regulation and Frequency Response Service are to be based on the rates set forth below, as found in Attachment O – PSCo of this Tariff.

1) Monthly Point-To-Point Delivery: the amount identified on Table 2, line 46 Non-VER column of the PSCo formula rate /kW-month

2) Weekly Point-To-Point Delivery: the amount identified on Table 2, line 47 Non-VER column of the PSCo formula rate /kW-week
3) Daily Point-To-Point Delivery: the amount identified on Table 2, line 48 Non-VER column of the PSCo formula rate /kW-day
4) Daily Point-To-Point Delivery off peak: the amount identified on Table 2, line 49 Non-VER column of the PSCo formula rate /kW-day
5) Hourly Point-To-Point Delivery: the amount identified on Table 2, line 50 Non-VER column of the PSCo formula rate /MWh
6) Hourly Point-To-Point Delivery off peak: the amount identified on Table 2, line 51 Non-VER column of the PSCo formula rate /MWh
7) Network Integration Delivery: the amount identified on Table 2, line 52 Non-VER column of the PSCo formula rate /kW-month
8) Ancillary Services Delivery the amount identified on Table 2, line 53 Non-VER column of the PSCo formula rate /kW-month

(c) Variable Energy Resources

The charges for Regulation and Frequency Response Service are to be based on the rates set forth below, as found in Attachment O – PSCo of this Tariff.

1) Monthly Point-To-Point Delivery: the amount identified on Table 2, line 46 VER column of the PSCo formula rate /kW-month
2) Weekly Point-To-Point Delivery: the amount identified on Table 2, line 47 VER column of the PSCo formula rate /kW-week
3) Daily Point-To-Point Delivery: the amount identified on Table 2, line 48 VER column of the PSCo formula rate /kW-day
4) Daily Point-To-Point Delivery off peak: the amount identified on Table 2, line 49 VER column of the PSCo formula rate /kW-day
5) Hourly Point-To-Point Delivery: the amount identified on Table 2, line 50 VER column of the PSCo formula rate /MWh
6) Hourly Point-To-Point Delivery off peak: the amount identified on Table 2, line 51 VER column of the PSCo formula rate /MWh
7) Network Integration Delivery: the amount identified on Table 2, line 52 VER column of the PSCo formula rate /kW-month
8) Ancillary Services Delivery the amount identified on Table 2, line 53 VER column of the PSCo formula rate /kW-month

To the extent the Transmission Customer designates a power purchase agreement as a Network Resource, the Transmission Customer shall provide a certification to the Transmission Provider that specifies the portion of power under that agreement that may be provided by one or more Variable Energy Resources and that information shall be used in the determination of the amount of the customer's resources that are Variable Energy Resources. By December 1 of each year, the Transmission Customer is required to provide the Transmission Provider attestation of the nameplate capacity of Variable Energy Resource and non-Variable Energy Resources generation owned or controlled by the Transmission Customer and located within the Balancing Authority Area to be used for billing purposed for the following year.

SCHEDULE 3A
Regulation and Frequency Response Service for
Point-To-Point Transmission Service
For exports from Public Service Company of Colorado

Regulation and Frequency Response Service is necessary to provide for the continuous balancing of resources (generation and interchange) with load and for maintaining scheduled Interconnection frequency at sixty cycles per second (60 Hz). Regulation and Frequency Response Service is accomplished by committing on-line generation whose output is raised or lowered (predominantly through the use of automatic generating control equipment) and by other non-generation resources capable of providing this service as necessary to follow the moment-by-moment changes in load and moment-to-moment changes for a generator located within the PSCo Balancing Authority Area that is delivering to a load outside the PSCo Balancing Authority Area.

The Transmission Provider must offer this service to Transmission Customers taking Point-to-Point Transmission Service. Notwithstanding the foregoing, the Transmission Provider may not charge a Transmission Customer for service under both Schedule 3 and Schedule 3A for the same transaction.

The Transmission Customer taking such Point-To-Point Transmission Service must either purchase Regulation and Frequency Response Service from the Transmission Provider or make alternative comparable arrangements, as may be further described in applicable PSCo business practices. Alternative comparable arrangements for a Transmission Customer may include self-supply of this service from generation or non-generation resources. The Transmission Provider will take into account the speed and accuracy of regulation resources in its determination of Regulation and Frequency Response reserve requirements, including as it reviews whether a self-supplying Transmission Customer has made alternative comparable arrangements. Upon request by the self-supplying Transmission Customer, the Transmission Provider will share with the Transmission Customer its reasoning and any related data used to make the determination of whether the Transmission Customer has made alternative comparable arrangements.

The amount of and charges for Regulation and Frequency Response Service are set forth below. Charges for Regulation and Frequency Response Service apply to Long-Term Firm Point-to-Point Transmission Service, Short-Term Firm Point-to-Point Transmission Service, and Non-Firm Point-to-Point Transmission Service. The rates below are applied to the amount of the Transmission Customer's Reserved Capacity for Long-Term Firm Point-to-Point Transmission Service, or the Transmission Customer's hourly schedules for Short-Term Firm or Non-Firm Point-to-Point Transmission Service, grossed up for losses as determined under Schedule 14.

(a) Non-Variable Energy Resources

The charges for Regulation and Frequency Response Service are to be based on the rates set forth below, as found in Attachment O – PSCo of this Tariff.

1) Monthly Point-To-Point Delivery: the amount identified on Table 2, line 46 Non-VER column of the PSCo formula rate /kW-month
2) Weekly Point-To-Point Delivery: the amount identified on Table 2, line 47 Non-VER column of the PSCo formula rate /kW-week
3) Daily Point-To-Point Delivery: the amount identified on Table 2, line 48 Non-VER column of the PSCo formula rate /kW-day
4) Daily Point-To-Point Delivery off peak: the amount identified on Table 2, line 49 Non-VER column of the PSCo formula rate /kW-day
5) Hourly Point-To-Point Delivery: the amount identified on Table 2, line 50 Non-VER column of the PSCo formula rate /MWh
6) Hourly Point-To-Point Delivery off peak: the amount identified on Table 2, line 51 Non-VER column of the PSCo formula rate /MWh month

(b) Variable Energy Resources

The charges for Regulation and Frequency Response Service are to be based on the rates set forth below, as found in Attachment O – PSCo of this Tariff.

1) Monthly Point-To-Point Delivery: the amount identified on Table 2, line 46 VER column of the PSCo formula rate /kW-month
2) Weekly Point-To-Point Delivery: the amount identified on Table 2, line 47 VER column of the PSCo formula rate /kW-week
3) Daily Point-To-Point Delivery: the amount identified on Table 2, line 48 VER column of the PSCo formula rate /kW-day
4) Daily Point-To-Point Delivery off peak: the amount identified on Table 2, line 49 VER column of the PSCo formula rate /kW-day
5) Hourly Point-To-Point Delivery: the amount identified on Table 2, line 50 VER column of the PSCo formula rate /MWh
6) Hourly Point-To-Point Delivery off peak: the amount identified on Table 2, line 51 VER column of the PSCo formula rate /MWh

For a Transmission Customer using Point-to-Point Transmission Service to deliver both Variable Energy Resource and Non-Variable Energy Resource generation, the regulation rate shall be allocated proportionally between the capacity of the Variable Energy Resource generation and the Non-Variable Energy Resource generation.

The total charge in any day, pursuant to a reservation for Hourly delivery, shall not exceed the Daily Rate pursuant to this Schedule 3A times the highest amount in megawatts of Reserved Capacity in any hour during such day. In addition, the total charge in any week, pursuant to a reservation for Hourly or Daily delivery, shall not exceed the Weekly Rate pursuant to this Schedule 3A times the highest amount in megawatts of Reserved Capacity in any hour during such week.

By December 1 of each year, the Transmission Customer is required to provide the Balancing Authority Area operator attestation of the nameplate capacity of Variable Energy Resource and non-Variable Energy Resources generation owned or controlled by the Transmission Customer

that is delivered through service under this Schedule 3A to be used for billing purposes for the following year.

4 Energy Imbalance Service Version: 0.0.0 Effective: 7/30/2010

SCHEDULE 4

Energy Imbalance Service

Availability: Available on the PSCo system. Schedule 4 Service on the NSP and SPS systems shall be available from the Midwest ISO and SPP, respectively.

Energy Imbalance Service is provided when a difference occurs between the scheduled and the actual delivery of energy to a load located within a Control Area over a single hour.

(a) In the case of service under Parts II or III of this Tariff, the Transmission Provider must offer this service when the transmission service is used to serve load within its Control Area. The Transmission Customer must either purchase this service from the Transmission Provider or make alternative comparable arrangements, which may include use of non-generation resources capable of providing this service, to satisfy its Energy Imbalance Service obligation. To the extent the Control Area operator performs this service for the Transmission Provider, charges to the Transmission Customer are to reflect only a pass-through of the costs charged to the Transmission Provider by that Control Area operator. The Transmission Provider may charge a Transmission Customer a penalty for either hourly energy imbalances under this Schedule or a penalty for hourly generator imbalances under Schedule 9 for imbalances occurring during the same hour, but not both unless the imbalances aggravate rather than offset each other.

(b) In the case of service under Part IV of this Tariff, the Balancing Authority Operator must offer this service to the Ancillary Service Customer (ASC). The ASC must either purchase this service from the Balancing Authority Operator or make alternative comparable arrangements, which may include use of non-generation resources capable of providing this service, to satisfy the ASC's Energy Imbalance Service obligation. The Balancing Authority Operator may charge an Ancillary Service Customer a penalty for either hourly energy imbalances under this Schedule or a penalty for hourly generator imbalances under Schedule 9 for imbalances occurring during the same hour, but not both unless the imbalances aggravate rather than offset each other.

(c) PSCo is both the Transmission Provider and Balancing Authority (Control Area) Operator for purposes of this Schedule 4.

The Transmission Provider shall establish charges for energy imbalance based on the deviation bands as follows: (i) deviations within +/- 1.5 percent (with a minimum of 2 MW) of the scheduled transaction to be applied hourly to any energy imbalance that occurs as a result of the Transmission Customer's scheduled transaction(s) will be netted on a monthly basis and settled financially, at the end of the month, at 100 percent of incremental or decremental cost; (ii) deviations greater than +/- 1.5 percent up to 7.5 percent (for greater than 2 MW up to 10 MW) of the scheduled transaction to be applied hourly to any energy imbalance that occurs as a result of the Transmission Customer's scheduled transaction(s) will be settled financially, at the end of each month, at 110 percent of incremental cost or 90 percent of decremental cost, and

(iii) deviations greater than +/- 7.5 percent (or 10 MW) of the scheduled transaction to be applied hourly to any energy imbalance that occurs as a result of the Transmission Customer's scheduled transaction(s) will be settled financially, at the end of each month, at 125 percent of incremental cost or 75 percent of decremental cost.

For purposes of this Schedule, incremental cost and decremental cost represent the Transmission Provider's actual average hourly cost of the last 10 MW dispatched for any purpose e.g., to supply the Transmission Provider's Native Load Customers, correct imbalances, or make off-system sales, based on the replacement cost of fuel, unit heat rates, start-up costs (including any commitment and redispatch costs), incremental operation and maintenance costs, and purchased and interchange power costs and taxes, as applicable.

Components of Incremental/Decremental Cost

For purposes of this Schedule, incremental and decremental cost shall equal Transmission Provider's actual average hourly cost of the last 10 MW dispatched for any purpose. The components of such cost include:

Fuel Costs

Incremental fuel costs are calculated using the following criteria. For natural gas generation units, the incremental costs are the estimated daily spot gas commodity price plus the transportation costs to move the commodity to the plants. The inputs for coal fired units are defined as monthly spot coal prices for units that have the ability to take delivery of spot coal, and contract coal prices for plants that have full requirements coal contracts. Oil prices shall be updated when used.

Heat Rate Coefficients

Heat rate coefficients used in determining incremental cost will be consistent with coefficients used in the PSCo Energy Management System (EMS) to dispatch PSCo's actual generating system and consistent with coefficients used in the production and unit commit/economic dispatch models. These heat rate coefficients are updated as necessary to reflect changes in the operating parameters of plant equipment.

Start up Costs

If a generating unit is started to support short term off-system sales, all the start up costs associated with that unit will be assigned to incremental cost for the first hour of the unit's operation.

Unit Minimums and Contract Minimums

All of PSCo's generating units have minimum levels of operation, and all of the purchased power agreements have minimum scheduling requirements. If a generation resource is started specifically to make an off-system sale or to meet reserve requirements because of such a sale, then the cost of the entire operating range of the resource will be included in incremental cost. If a generation resource is started for Native Load, then only the output above the minimum level is included in incremental cost.

Unit Minimum Run Times

Certain PSCo generating units have minimum run time requirements in place to support reliable unit operation. Such generating units will not be started for off-system sales unless the scheduled and/or contracted duration of the sale is equal to or greater than the minimum run time requirement. Should such off-system sale be curtailed prior to the completion of the generating unit's minimum run time, any uneconomic costs associated with the remaining unit run time will be assigned to incremental cost. Uneconomic costs are defined as the difference in cost between the cost of energy produced by the unit started for the sale and the cost of the energy displaced by the output of such unit, plus any other additional expenses created by the generating unit started for the sale.

Dispatchable Resources

All dispatchable resources are available for cost assignment to off-system sales. Dispatchable resources are defined as those generating units or long term purchases whose output can be raised or lowered intra-day to respond to changes in loads. If a dispatchable resource is started to provide energy for Native Load, only the cost of output above the resource's operational or contractual minimum load is available to be assigned to incremental cost.

Variable O&M and Tolling Costs

Variable operation and maintenance (O&M) and tolling costs are assigned to each of the generating units, and when applicable under contract, such costs will be assigned to purchased power resources. These costs will be included in incremental cost.

Intraday Purchases (Not Prescheduled)

All hourly power purchases may be assigned to incremental cost. If an hourly purchase, including all transmission costs, is higher than the incremental cost of a PSCo dispatchable resource, the cost of such purchase will be allocated to incremental cost. If an hourly purchase, including all transmission costs, is lower than the incremental cost of a PSCo dispatchable resource, the cost of the higher priced dispatchable resource will be assigned to incremental cost.

Pumped Storage Costs

The cost of pumped storage energy will be deemed to be the hourly cost of the highest dispatchable resource cost available during the hours of the previous pumping cycle after the highest dispatchable resource cost has been assigned to short term off-system sales for such hours. The hour-by-hour energy for pumping and cost assignment will be documented.

Methodology for Calculating Incremental and Decremental Cost

PSCo uses a computer program (Cost Calculator) to assign costs to serve non-native short term wholesale off-system sales. The program determines the cost to serve short-term off-system sales, including fuel associated with generation and applicable economic purchase transaction costs. The general principle is to assign the most expensive resources to short-term off-system sales first, allowing the less expensive resources to be assigned to PSCo's native load. For

each hour, the program stacks the resources that supplied energy during the hour based on their costs in one MW increments. After all costs have been assigned and stacked, the simple average will be calculated for the last 10 MWs to determine PSCo's actual average hourly cost of the last 10 MW dispatched for any purpose.

4A Reserve Sharing Energy Charges Version: 0.0.0 Effective: 7/30/2010

SCHEDULE 4A

RESERVE SHARING ENERGY CHARGES

I. General

Under Attachment AE, Section 4.2 of the Southwest Power Pool's ("SPP") Open Access Transmission Tariff, operating reserves may be both activated and provided by SPP. This Schedule sets forth:

(1) The rates that Southwestern Pubic Service Company ("SPS") will charge when supplying Reserve Sharing Energy during any Reserve Sharing Activation within the Reserve Sharing Group ("RSG"), regardless of whether the activation is caused by a Resource located within SPS' control area or by a Resource located outside of SPS' control area. These rates also apply without regard to whether the activation is caused by a Resource registered to a member of the RSG or a Resource that is registered to an SPP Market Participant that is not a member of the RSG; and

(2) The charges to be collected by SPP and remitted to SPS, pursuant to Attachment AK of the SPP OATT, from any non-RSG member located within the control area of SPS to which a Resource is registered by SPP when an outage or derate of such Resource causes activation of the Reserve Sharing System by SPS.

II. Definitions

The terms Locational Imbalance Price ("LIP"), Settlement Location, Market Participant, and Resource as used herein are defined in the SPP OATT.

III. Rates

When providing energy assistance supplied during Reserve Sharing Activation, SPS shall be compensated in accordance with the following:

1.0 Payment will be financial, and accounting for Reserve Sharing Energy will be in whole megawatt-hours.

2.0 For energy provided during a Reserve Sharing Activation, the charges shall be the higher of:

(i) the hourly LIP at the Settlement Location used to provide such service, per megawatt-hour; or

(ii) one (1)-mill/kWh plus the incremental cost to provide such service to the extent such service is provided with purchased power, or 110% of the incremental cost of the resource(s) used to provide such service to the extent such service is provided solely with SPS-owned resources.

3.0 As used in this Schedule 4A, the term “incremental cost” shall mean any cost that would not have been incurred if the Reserve Sharing Energy had not been supplied, including the cost of fuel, operation and maintenance costs, energy provided for electric losses, purchased power, start-up and shut-down costs, charges assessed to SPS under Schedule 4 of the SPP OATT in conjunction with Reserve Sharing Energy supplied under this Schedule 4A, and any other cost that would not have been otherwise incurred if the Reserve Sharing Energy had not been supplied. The term “incremental costs” does not include the cost of Transmission Service or SPS’s capacity.

4.0 In addition to the charges outlined above, the buyer shall pay transmission charges associated with the delivery of Reserve Sharing Energy pursuant to the provisions of Schedule AK of the SPP OATT.

5.0 The Point of Delivery for Reserve Sharing Energy shall be the resource used to supply such Reserve Sharing Energy.

IV. Charges to Non-RSG Market Participants

When SPS’s activation of the Reserve Sharing System is attributable to a Resource located within SPS that is registered to an SPP Market Participant that is not an RSG member, SPP shall collect from that Market Participant and remit to SPS the following:

1.0 Charges assessed by SPS pursuant to this Schedule 4A for Reserve Sharing Energy provided by SPS.

2.0 The total amount invoiced to SPS by other RSG members that provided Reserve Sharing Energy in response to SPS’s activation of the Reserve Sharing System pursuant to the approved Schedule 4A for Reserve Sharing Energy for such RSG members.

3.0 SPS shall provide to SPP a summary invoice that specifies the amount charged for Reserve Sharing Energy provided by SPS, if any, as well as the amount charged to SPS by other RSG members providing Reserve Sharing Energy pursuant to the approved Schedule 4A for such other RSG members. SPS shall attach to this summary invoice copies of individual invoices submitted by RSG members providing Reserve Sharing Energy and SPS’ own invoice for energy supplied by SPS under this Schedule 4A.

SCHEDULE 4B

RESERVE SHARING ENERGY CHARGES

I. General

Under Part IV of the Public Service Company of Colorado ("PSCo") Open Access Transmission Tariff, operating reserves may be both activated and provided by PSCo to customers taking this service. Reserve sharing energy provided is in response to Rocky Mountain Reserve Group ("RMRG") or successor organization contingency reserve activation on behalf of the customer. This Schedule sets forth:

(1) The rates that PSCo will charge when supplying Reserve Sharing Energy during any Reserve Sharing Activation within the RMRG, regardless of whether the activation is caused by a Resource located within PSCo's control area or by a Resource located outside of PSCo's control area. These rates also apply without regard to whether the activation is caused by a Resource registered to a member of the RMRG or a Resource that is located within PSCo's control area that is not a member of the RMRG; and

(2) The charges to be collected by PSCo, pursuant to Schedule 4 of the PSCo OATT, from any non-RMRG member located within the control area of PSCo to which a Resource is registered by PSCo when an outage or derate of such Resource causes activation of the Reserve Sharing System by PSCo.

II. Rates

When PSCo provides energy assistance supplied during Reserve Sharing Activation for resources owned by customers taking service under Part IV of the PSCo Open Access Transmission Tariff, PSCo shall be compensated in accordance with the following:

1.0 Payment will be financial, and accounting for Reserve Sharing Energy will be in whole megawatt-hours.

2.0 For energy provided during a Reserve Sharing Activation, the charges shall be the sum of:

(i) the rate for reserve sharing energy provided by other RMRG members for PSCo on behalf the customer will be equal to the cost of the purchase, plus $1/MWh; plus

(ii) the rate for reserve sharing energy provided by PSCo for the Customer will be based on the incremental costs PSCo has incurred for supplying reserve sharing energy, consistent with applicable RMRG Bylaws. Charges will be the greater of $30/MWh or PSCo's actual cost (derived by Cost Calculator) plus 10 %, provided that the 10% adder may not exceed ten dollars per megawatt-hour ($10/MWh).

3.0 As used in this Schedule 4B, the term “incremental costs” shall mean any cost that would not have been incurred if the Reserve Sharing Energy had not been supplied, including the cost of fuel, operation and maintenance costs, energy provided for electric losses, purchased power, start-up and shut-down costs, and any other cost that would not have been otherwise incurred if the Reserve Sharing Energy had not been supplied. The term “incremental costs” does not include the cost of Transmission Service or PSCo’s capacity.

4.0 The Point of Delivery for Reserve Sharing Energy shall be the resource used to supply such Reserve Sharing Energy.

5.0 PSCo shall provide a summary invoice that specifies the amount charged for Reserve Sharing Energy provided by PSCo, if any, as well as the amount charged to PSCo by other RMRG members providing Reserve Sharing Energy pursuant to the RMRG bylaws. To this summary, PSCo shall attach copies of individual invoices submitted by RMRG members providing Reserve Sharing Energy.

SCHEDULE 5

Operating Reserve - Spinning Reserve Service

Spinning Reserve Service is needed to serve load immediately in the event of a system contingency. Spinning Reserve Service may be provided by generating units that are on-line and loaded at less than maximum output and by non-generation resources capable of providing this service.

(a) In the case of service under Parts II or III of this Tariff, the Transmission Provider must offer this service when the transmission service is used to serve load within its Control Area. The Transmission Customer must either purchase this service from the Transmission Provider or make alternative comparable arrangements to satisfy its Spinning Reserve Service obligation. To the extent the Control Area operator performs this service for the Transmission Provider, charges to the Transmission Customer are to reflect only a pass-through of the costs charged to the Transmission Provider by that Control Area operator.

(b) In the case of service under Part IV of this Tariff, the Balancing Authority Operator must offer this service to the Ancillary Service Customer. The Ancillary Service Customer must either purchase this service from the Balancing Authority Operator or make alternative comparable arrangements to satisfy the Ancillary Service Customer's Spinning Reserve Service obligation.

Service by Public Service Company of Colorado:

The Transmission Customer or Ancillary Service Customer shall purchase Spinning Reserve Service in the following amounts:

1)	For Point-To-Point Transmission Service:	3.5% of Reserved Capacity
2)	For Network Integration Transmission Service:	3.5% of Network Load
3)	For Balancing Authority Area Ancillary Services	3.5% of Ancillary Services Load

The charges for Spinning Reserve Service are to be based on the rates set forth below, as found in Attachment O – PSCo of this Tariff.

4) Monthly Point-To-Point Delivery: the amount identified on Table 2, line 52 of the PSCo formula rate /kW-month
5) Weekly Point-To-Point Delivery: the amount identified on Table 2, line 53 of the PSCo formula rate /kW-week
6) Daily Point-To-Point Delivery: the amount identified on Table 2, line 54 of the PSCo formula rate /kW-day
7) Hourly Point-To-Point Delivery: the amount identified on Table 2, line 55 of the PSCo formula rate /MWh
8) Network Integration Delivery: the amount identified on Table 2, line 56 of the PSCo formula rate /kW-month
9) Ancillary Services Delivery the amount identified on Table 2, line 57 of the PSCo formula rate /kW-month

The total demand charge in any day, pursuant to a reservation for Hourly delivery, shall not exceed the rate specified in section (6) above times the highest amount in kilowatts of Reserved Capacity in any hour during such day. In addition, the total demand charge in any week, pursuant to a reservation for Hourly or Daily delivery, shall not exceed the rate specified in section (5) above times the highest amount in kilowatts of Reserved Capacity in any hour during such week.

6 Operating Reserve - Supplemental Reserve Service Version: 0.2.0 Effective: 3/1/2014

SCHEDULE 6

Operating Reserve - Supplemental Reserve Service

Supplemental Reserve Service is needed to serve load in the event of a system contingency; however, it is not available immediately to serve load but rather within a short period of time. Supplemental Reserve Service may be provided by generating units that are on-line but unloaded, by quick-start generation or by interruptible load or other non-generation resources capable of providing this service.

(a) In the case of service under Parts II or III of this Tariff, the Transmission Provider must offer this service when the transmission service is used to serve load within its Control Area. The Transmission Customer must either purchase this service from the Transmission Provider or make alternative comparable arrangements to satisfy its Supplemental Reserve Service obligation. To the extent the Control Area operator performs this service for the Transmission Provider, charges to the Transmission Customer are to reflect only a pass-through of the costs charged to the Transmission Provider by that Control Area operator.

(b) In the case of service under Part IV of this Tariff, the Balancing Authority Operator must offer this service to the Ancillary Service Customer. The Ancillary Service Customer must either purchase this service from the Balancing Authority Operator or make alternative arrangements to satisfy the Ancillary Service Customer's Supplemental Reserve Service obligation.

<u>Service by Public Service Company of Colorado:</u>

The Transmission Customer or Ancillary Service Customer shall purchase Supplemental Reserve Service in the following amounts:

1)	For Point-To-Point Transmission Service:	3.5% of Reserved Capacity
2)	For Network Integration Transmission Service:	3.5% of Network Load
3)	For Balancing Authority Area Ancillary Services:	3.5% of Ancillary Services Load

The charges for Supplemental Reserve Service are to be based on the rates set forth below, as found in Attachment O – PSCo of this Tariff.

4) Monthly Point-To-Point Delivery: the amount identified on Table 2, line 60 of the PSCo formula rate /kW-month
5) Weekly Point-To-Point Delivery: the amount identified on Table 2, line 61 of the PSCo formula rate /kW-week
6) Daily Point-To-Point Delivery: the amount identified on Table 2, line 62 of the PSCo formula rate /kW-day
7) Hourly Point-To-Point Delivery: the amount identified on Table 2, line 63 of the PSCo formula rate /MWh

8) Network Integration Delivery: the amount identified on Table 2, line 64 of the PSCo formula rate /kW-month

9) Ancillary Services Delivery: the amount identified on Table 2, line 65 of the PSCo formula rate /kW-month

The total demand charge in any day, pursuant to a reservation for Hourly delivery, shall not exceed the rate specified in section (6) above times the highest amount in kilowatts of Reserved Capacity in any hour during such day. In addition, the total demand charge in any week, pursuant to a reservation for Hourly or Daily delivery, shall not exceed the rate specified in section (5) above times the highest amount in kilowatts of Reserved Capacity in any hour during such week.

7 Long-Term Firm and Short-Term Firm P-T-P Transmission Svc Version: 0.3.5 Effective: 1/1/2013

SCHEDULE 7

Long-Term Firm and Short-Term Firm Point-To-Point Transmission Service

The Transmission Customer shall compensate the Transmission Provider each month for Reserved Capacity at the sum of the applicable charges set forth below. Service in the opposite direction of the original schedule shall be considered a new and separate service under this Tariff requiring payment of a separate charge.

I. Reserved Capacity Charges

Service by Northern States Power Companies:

1)	Monthly delivery:	$1.371/kW-month of Reserved Capacity
2)	Weekly delivery:	$0.316/kW-week of Reserved Capacity
3)	Daily delivery:	
	On-Peak Days:	$0.0527/kW-day of Reserved Capacity
	Off-Peak Days:	$0.0452/kW-day of Reserved Capacity

Off-Peak Days are Sundays and holidays. Holidays shall be as defined by NERC, currently New Year's Day, Memorial Day, Independence Day, Labor Day, Thanksgiving Day, and Christmas Day. On-Peak Days are all days not designated as Off-Peak Days.

The total demand charge in any week, pursuant to a reservation for Daily delivery, shall not exceed the rate specified in section (5) above times the highest amount in kilowatts of Reserved Capacity in any day during such week.

4) MAPP Application and Administrative Fees: In the event the Transmission Provider is billed by MAPP for OASIS application and administrative fees or scheduling fees related to use of NSP's Transmission System under this Tariff by a non-member of the MAPP Regional Transmission Committee, NSP shall pass such charges through to the Transmission Customer(s) causing such fees to be incurred.

Service by Public Service Company of Colorado- See annual Formula Rate Template (Attachment O – PSCo) posted on the PSCo OASIS:

5) Monthly delivery: the rate /kW-month of Reserved Capacity identified on Table 2, line 14 of the PSCo formula rate template
6) Weekly delivery: the rate /kW-week of Reserved Capacity identified on Table 2, line 16 of the PSCo formula rate template
7) Daily delivery: the rate /kW-day of Reserved Capacity identified on Table 2, line 17 of the PSCo formula rate template

The charges shall be subject to change in accordance with the associated implementation procedures set forth in Attachment O – PSCo of this tariff.

The total demand charge in any week, pursuant to a reservation for Daily delivery, shall not exceed the rate specified in section (6) above times the highest amount in kilowatts of Reserved Capacity in any day during such week.

Service by Southwestern Public Service Company:
Beginning July 6, 2008 through December 31, 2008, the following rates for the SPS Transmission System shall be in effect:

8)	Monthly delivery:	$1.578/kW-month of Reserved Capacity
9)	Weekly delivery:	$0.364/kW-week of Reserved Capacity
10)	Daily Delivery:	
	On-Peak:	$0.61/kW-day of Reserved Capacity
	Off-Peak:	$0.52/kW-day of Reserved Capacity

Beginning January 1, 2009, the following rates for the SPS Transmission System shall be in effect:

11) Monthly delivery: the amount identified on page 1 line 11 of the SPS formula rate/kW-month of Reserved Capacity
12) Weekly delivery: the amount identified on page 1 line 12 of the SPS formula rate/kW-week of Reserved Capacity
13) Daily delivery:
On-Peak: the amount identified on page 1 line 13 of the SPS formula rate/kW-day of Reserved Capacity
Off-Peak: the amount identified on page 1 line 13 of the SPS formula rate/kW-day of Reserved Capacity

The charges shall be subject to change in accordance with the associated implementation procedures set forth in Appendix 1 of Attachment O – SPS of this tariff.

On-Peak is all hours between HE 0700 and HE 2200, inclusive, Central Time Zone, excluding Sundays and holidays. Holidays shall be as defined by NERC, currently New Year's Day, Memorial Day, Independence Day, Labor Day, Thanksgiving Day, and Christmas Day. Off-Peak is all hours not designated as On-Peak.

The total demand charge in any week, pursuant to a reservation for Daily delivery, shall not exceed the rate specified in section (10) above times the highest amount in kilowatts of Reserved Capacity in any day during such week.

Capacity designations at the Point(s) of Receipt will be inclusive of losses.

SPP Administrative Charge Recovery: An administrative charge shall be applied to all transmission service in the SPS zone under the Xcel Energy OATT to recover SPS's payment of the SPP Administrative Charges (Schedule 1-A to the SPP OATT) associated with such loads or services. For Point-To-Point Transmission Service, this charge shall be up to $0.20 per MW per hour for all capacity reserved. The charge per MW per hour shall be the same for Point-To-Point Transmission Service as for Network Integration Transmission Service. This will be a direct pass through of the SPP Administrative Charge assessed to SPS for grandfathered transmission service loads in the SPS zone.

Service by Multiple Operating Companies:

When a Transmission Customer requires transmission service for a specific transaction over any two or all three of the NSP Transmission System, the PSCo System, or the SPS Transmission System, the higher of the applicable rate for the Transmission Providers supplying the transmission service shall apply. However, the Transmission Customer shall be responsible for arranging and paying for the use of any intervening third party transmission system.

Point-To-Point Transmission Service Across the Lamar Tie Line:

Notwithstanding the foregoing, Transmission Customers taking Point-To-Point Transmission Service across the Lamar Tie Line to or from the PSCo transmission system and sourcing or sinking on the SPS transmission system shall take service under the SPP OATT for the portion of the transaction involving the SPS transmission system; and service under this Tariff for the portion of the transaction involving the PSCo transmission system, and shall pay to PSCo for such service a discounted rate of one-half the applicable PSCo rate under this Schedule 7.

Transmission Customers taking Point-To-Point Transmission Service across the Lamar Tie Line to or from the PSCo transmission system and sourcing or sinking in the SPS Zone shall also pay for such service a discounted rate of one-half the applicable SPP OATT rate stated under this Schedule 7.

Additional charges for service across the Lamar Tie may be imposed under the SPP OATT

Discounts:

Three principal requirements apply to discounts for transmission service as follows (1) any offer of a discount made by the Transmission Provider must be announced to all Eligible Customers solely by posting on the OASIS, (2) any customer-initiated requests for discounts (including requests for use by one's wholesale merchant or an Affiliate's use) must occur solely by posting on the OASIS, and (3) once a discount is negotiated, details must be immediately posted on the OASIS. For any discount agreed upon for service on a path, from point(s) of receipt to point(s) of delivery, the Transmission

Provider must offer the same discounted transmission service rate for the same time period to all Eligible Customers on all unconstrained transmission paths that go to the same point(s) of delivery on the Transmission System.

Resales:

The rates and rules governing charges and discounts stated above shall not apply to resales of transmission service, compensation for which shall be governed by section 23.1 of the Tariff.

II. Opportunity Costs

Any Opportunity Costs charges costs will be set out in the Service Agreement between the Transmission Customer and the Transmission Provider which shall be filed with the Commission.

III. Direct Assignment Facilities Charges

Any Direct Assignment Facilities charges will be set out in the Service Agreement between the Transmission Customer and the Transmission Provider which shall be filed with the Commission.

IV. Local Distribution Facilities Charges

Any Local Distribution Facilities charges will be set out in the Service Agreement between the Transmission Customer and the Transmission Provider which shall be filed with the Commission.

V. FERC Annual Charge Fee (Applicable to PSCo and SPS Transmission Systems)

An administrative charge shall be applied to all transmission services in the PSCo zone to recover the cost of the Commission annual charge (Annual Charge) under Part 382 of the Commission's regulations. The Commission issues the invoice for the Annual Charge to PSCo based on their megawatt-hours (MWH) of transmission of electric energy in interstate commerce as reported in FERC Form 582. The charge factor or billing rate for PSCo is calculated by the FERC on its Annual Charge invoice and is identified on Table 2, line 22 of the PSCo formula rate data posted on the PSCo OASIS. Xcel Energy shall file the posted Annual Charge with the Commission, as part of its annual informational filing. The posted Annual Charge billing rate shall then be billed for all MWH of transmission service to the individual Transmission Customer during the formula rate year. This will be a direct pass through of the FERC Annual Charge.

SPP bills SPS each month under Schedule 12 of the SPP OATT for all load in the SPS zone not otherwise directly billed by SPP. The charges to a customer in the SPS zone will be a direct pass through of the charges to SPS under Schedule 12 of the SPP OATT related to the customer's load. The charge per MWH shall be the same for Point-To-Point Transmission Service as for Network Integration Transmission Service. This will be a direct pass through of the FERC Annual Charge.

No Transmission Customer shall request that the FERC Annual Charge billing rate be placed into effect subject to suspension or refund or that the Commission otherwise condition recovery of such FERC Annual Charge. However, each such Transmission Customer reserves its rights, if any, to challenge , or seek refunds concerning any such

FERC Annual Charge to the extent such FERC Annual Charge does not reflect a simple and accurate pass-through of the FERC Annual Charge.

VI. <u>Unreserved Use of Transmission Capacity (Applicable to PSCo Transmission System):</u>

In the event that a Transmission Customer (including third party sales by the Transmission Provider) exceeds its Reserved Transmission Service Capacity at any Point of Receipt or Point of Delivery or uses Transmission Service at a Point of Receipt or Point of Delivery that it has not reserved, the Transmission Customer shall pay, in addition to the otherwise applicable charges, a penalty charge for the unauthorized use based upon the duration of the period when the unreserved capacity was used equal to twice the applicable rate for Firm Point-to-Point Transmission Service as follows: (1) For unauthorized use within a single day, the penalty charge shall be based on the daily rate. (2) For unauthorized use in two or more days in a calendar week, the penalty charge shall be based on the weekly rate. (3) For multiple instances of unauthorized use in more than one calendar week in a calendar month, the penalty charge shall be based on the monthly rate. Penalty revenues shall be used to reduce the costs of transmission service to Transmission Customers other than the Transmission Customer who was assessed the penalty. For the amounts exceeding its Reserved Transmission Service Capacity or use of Transmission Service that it has not reserved, the Transmission Customer also must replace losses on the unreserved capacity as required by the Xcel Energy OATT in Section 28.5 and Section 37.4.

SCHEDULE 8

Non-Firm Point-To-Point Transmission Service

The Transmission Customer shall compensate the Transmission Provider for Non-Firm Point-To-Point Transmission Service up to the sum of the applicable charges set forth below. Service in the opposite direction of the original schedule shall be considered a new and separate service under this Tariff requiring payment of a separate charge.

I. Reserved Capacity Charges

Service by Northern States Power Companies:

1)	Monthly delivery (all hours):	$1.153/kW-month of Reserved Capacity
	On-Peak Hours:	$0.647/kW-month of Reserved Capacity
	Off-Peak Hours:	$0.506/kW-month of Reserved Capacity
2)	Weekly delivery (all hours):	$0.2661/kW-week of Reserved Capacity
	On-Peak Hours:	$0.149/kW-week of Reserved Capacity
	Off-Peak Hours:	$0.117/kW-week of Reserved Capacity
3)	Daily delivery (all hours):	$0.0389/kW-day of Reserved Capacity
	On-Peak Hours:	$0.0253/kW-day of Reserved Capacity
	Off-Peak Hours:	$0.0127/kW-day of Reserved Capacity
4)	Hourly delivery:	$1.584/MWh of Reserved Capacity

On-Peak Hours are all hours between HE 0700 and HE 2200, inclusive, Central Time Zone, excluding Sundays and holidays. Holidays shall be as defined by NERC, currently New Year's Day, Memorial Day, Independence Day, Labor Day, Thanksgiving Day, and Christmas Day. Off-Peak Hours are all hours not designated as On-Peak Hours.

The total demand charge in any day, pursuant to a reservation for Hourly delivery, shall not exceed the rate specified in section (7) above times the highest amount in kilowatts of Reserved Capacity in any hour during such day. In addition, the total demand charge in any week, pursuant to a reservation for Daily delivery, shall not exceed the rate specified in section (6) above times the highest amount in kilowatts of Reserved Capacity in any day during such week.

5) MAPP Application and Administrative Fees: In the event the Transmission Provider is billed by MAPP for OASIS application and administrative fees or scheduling fees related to use of NSP's Transmission System under this Tariff by a non-member of the MAPP Regional Transmission Committee, NSP shall pass such charges through to the Transmission Customer(s) causing such fees to be incurred.

Service by Public Service Company of Colorado - See annual Formula Rate Template (Attachment O – PSCo) posted on the PSCo OASIS:

6) Monthly delivery: the rate /kW-month of Reserved Capacity identified on Table 2, line 14 of the PSCo formula rate template
7) Weekly delivery: the rate /kW-week of Reserved Capacity identified on Table 2, line 16 of the PSCo formula rate template
8) Daily delivery: the rate /kW-day of Reserved Capacity identified on Table 2, line 17 of the PSCo formula rate template
9) Hourly delivery:
   - On-Peak Hours: the on-peak rate /MWh of Reserved Capacity identified on Table 2, line 18 of the PSCo formula rate template
   - Off-Peak Hours: the off-peak rate /MWh of Reserved Capacity identified on Table 2, line 19 of the PSCo formula rate template

The charges shall be subject to change in accordance with the associated implementation procedures set forth in Attachment O – PSCo of this tariff.

On-Peak Hours shall be all hours between HE 0700 and HE 2300, inclusive, Mountain Time Zone, excluding Sundays and holidays. Holidays shall be as defined by NERC, currently New Years Day, Memorial Day, Independence Day, Labor Day, Thanksgiving Day, and Christmas Day. Off-Peak Hours shall be all hours not designated as On-Peak Hours.

The total demand charge in any day, pursuant to a reservation for Hourly delivery, shall not exceed the rate specified in section (8) above times the highest amount in kilowatts of Reserved Capacity in any hour during such day. In addition, the total demand charge in any week, pursuant to a reservation for Daily delivery, shall not exceed the rate specified in section (7) above times the highest amount in kilowatts of Reserved Capacity in any day during such week.

Service by Southwestern Public Service Company:

Beginning July 6, 2008 through December 31, 2008, the following rates for the SPS Transmission System shall be in effect:

10)	Monthly delivery:	$1.578/kW-month of Reserved Capacity
11)	Weekly delivery:	$0.364/kW-week of Reserved Capacity
12)	Daily Delivery:	
	On-Peak:	$0.61/kW-day of Reserved Capacity
	Off-Peak:	$0.52/kW-day of Reserved Capacity
13)	Hourly delivery:	
	On Peak:	$3.813/MWh of Reserved Capacity
	Off-Peak:	$2.167/MWh of Reserved Capacity

Beginning January 1, 2009, the following rates for the SPS Transmission System shall be in effect:

14) Monthly delivery: the amount identified on page 1 line 11 of the SPS formula rate/kW-month of Reserved Capacity
15) Weekly delivery: the amount identified on page 1 line 12 of the SPS formula rate/kW-week of Reserved Capacity
16) Daily delivery:
    - On-Peak: the amount identified on page 1 line 13 of the SPS formula rate/kW-day of Reserved Capacity
    - Off-Peak: the amount identified on page 1 line 13 of the SPS formula rate/kW-day of Reserved Capacity
17) Hourly delivery:
    - On-Peak: the amount identified on page 1 line 14 of the SPS formula rate/MWh of Reserved Capacity
    - Off-Peak: the amount identified on page 1 line 14 of the SPS formula rate/MWh of Reserved Capacity

The charges shall be subject to change in accordance with the associated implementation procedures set forth in Appendix 1 of Attachment O – SPS of this tariff.

On-Peak is all hours between HE 0700 and HE 2200, inclusive, Central Time Zone, excluding Sundays and holidays. Holidays shall be as defined by NERC, currently New Year's Day, Memorial Day, Independence Day, Labor Day, Thanksgiving Day, and Christmas Day. Off-Peak is all hours not designated as On-Peak.

The total demand charge in any day, pursuant to a reservation for Hourly delivery, shall not exceed the rate specified in section (12) above times the highest amount in kilowatts of Reserved Capacity in any hour during such day. In addition, the total demand charge in any week, pursuant to a reservation for Daily delivery, shall not exceed the rate specified in section (11) above times the highest amount in kilowatts of Reserved Capacity in any day during such week.

Capacity designations at the Point(s) of Receipt will be inclusive of losses.

SPP Administrative Charge recovery: An administrative charge shall be applied to all transmission service in the SPS zone under the Xcel Energy OATT to recover SPS's payment of the SPP Administrative Charges (Schedule 1-A to the SPP OATT) associated with such loads or services. For Point-To-Point Transmission Service, this charge shall be up to $0.20 per MW per hour for all capacity reserved. The charge per MW per hour shall be the same for Point-To-Point Transmission Service as for Network Integration Transmission Service. This will be a direct pass through of the SPP Administrative Charge assessed to SPS for grandfathered transmission service loads in the SPS zone.

Service by Multiple Operating Companies:

When a Transmission Customer requires transmission service for a specific transaction over any two or all three of the NSP Transmission System, the PSCo System, or the SPS Transmission System, the higher of the applicable rate for the Transmission Providers supplying the transmission service shall apply. However, the Transmission Customer shall be responsible for arranging and paying for the use of any intervening third party transmission system.

Point-To-Point Transmission Service Across the Lamar Tie Line:

Notwithstanding the foregoing, Transmission Customers taking Point-To-Point Transmission Service across the Lamar Tie Line to or from the PSCo transmission system and sourcing or sinking on the SPS transmission system shall take service under the SPP OATT for the portion of the transaction involving the SPS transmission system; and service under this Tariff for the portion of the transaction involving the PSCo transmission system, and shall pay to PSCo for such service a discounted rate of one-half the applicable PSCo rate under this Schedule 8.

Transmission Customers taking Point-To-Point Transmission Service across the Lamar Tie Line to or from the PSCo transmission system and sourcing or sinking in the SPS Zone shall also pay for such service a discounted rate of one-half the applicable SPP OATT rate stated under this Schedule 8.

Additional charges for service across the Lamar Tie may be imposed under the SPP OATT.

Discounts:

Three principal requirements apply to discounts for transmission service as follows (1) any offer of a discount made by the Transmission Provider must be announced to all Eligible Customers solely by posting on the OASIS, (2) any customer-initiated requests for discounts (including requests for use by one's wholesale merchant or an Affiliate's use) must occur solely by posting on the OASIS, and (3) once a discount is negotiated, details must be immediately posted on the OASIS. For any discount agreed upon for service on a path, from point(s) of receipt to point(s) of delivery, the Transmission Provider must offer the same discounted transmission service rate for the same time period to all Eligible Customers on all unconstrained transmission paths that go to the same point(s) of delivery on the Transmission System.

Resales:

The rates and rules governing charges and discounts stated above shall not apply to resales of transmission service, compensation for which shall be governed by section 23.1 of the Tariff.

II. Opportunity Costs

Any Opportunity Costs charges costs will be set out in the Service Agreement between the Transmission Customer and the Transmission Provider which shall be filed with the Commission.

III. Direct Assignment Facilities Charges

Any Direct Assignment Facilities charges will be set out in the Service Agreement between the Transmission Customer and the Transmission Provider which shall be filed with the Commission.

IV. Local Distribution Facilities Charges

Any Local Distribution Facilities charges will be set out in the Service Agreement between the Transmission Customer and the Transmission Provider which shall be filed with the Commission.

V. FERC Annual Charge Fee (Applicable to PSCo and SPS Transmission Systems)

An administrative charge shall be applied to all transmission services in the PSCo zone to recover the cost of the Commission annual charge (Annual Charge) under Part 382 of the Commission's regulations. The Commission issues the invoice for the Annual Charge to PSCo based on their megawatt-hours (MWH) of transmission of electric energy in interstate commerce as reported in FERC Form 582. The charge factor or billing rate for PSCo is calculated by the FERC on its Annual Charge invoice and is identified on Table 2, line 22 of the PSCo formula rate data posted on the PSCo OASIS. Xcel Energy shall file the posted Annual Charge with the Commission, as part of its annual information filing. The posted Annual Charge billing rate shall then be billed for all MWH of transmission service to the individual Transmission Customer during the formula rate year. This will be a direct pass through of the FERC Annual Charge.

SPP bills SPS each month under Schedule 12 of the SPP OATT for all load in the SPS zone not otherwise directly billed by SPP. The charges to a customer in the SPS zone will be a direct pass through of the charges to SPS under Schedule 12 of the SPP OATT related to the customer's load. The charge per MWH shall be the same for Point-To-Point Transmission Service as for Network Integration Transmission Service. This will be a direct pass through of the FERC Annual Charge.

No Transmission Customer shall request that the FERC Annual Charge billing rate be placed into effect subject to suspension or refund or that the Commission otherwise condition recovery of such FERC Annual Charge. However, each such Transmission Customer reserves its rights, if any, to challenge, or seek refunds concerning any such FERC Annual Charge to the extent such FERC Annual Charge does not reflect a simple and accurate pass-through of the FERC Annual Charge.

VI. Unreserved Use of Transmission Capacity (Applicable to PSCo Transmission System):

In the event that a Transmission Customer (including third party sales by the Transmission Provider) exceeds its Reserved Transmission Service Capacity at any Point of Receipt or Point of Delivery or uses Transmission Service at a Point of Receipt or Point of Delivery that it has not reserved, the Transmission Customer shall pay, in addition to the otherwise applicable charges, a penalty charge for the unauthorized use based upon the duration of the period when the unreserved capacity was used equal to twice the applicable rate for Firm Point-to-Point Transmission Service as follows: (1) For unauthorized use within a single day, the penalty charge shall be based on the daily rate. (2) For unauthorized use in two or more days in a calendar week, the penalty charge shall be based on the weekly rate. (3) For multiple instances of unauthorized use in more than one calendar week in a calendar month, the penalty charge shall be based on the monthly rate. Penalty revenues shall be used to reduce the costs of transmission service to Transmission Customers other than the Transmission Customer who was assessed the penalty. For the amounts exceeding its Reserved Transmission Service Capacity or use of Transmission Service that it has not reserved, the Transmission Customer also must replace losses on the unreserved capacity as required by the Xcel Energy OATT in Section 28.5 and Section 37.4.

9 Generator Imbalance Service Version: 0.0.0 Effective: 7/30/2010

SCHEDULE 9

Generator Imbalance Service

Availability: Available on the PSCo system. Schedule 9 Service on the NSP and SPS systems shall be available from the Midwest ISO and SPP, respectively.

Generator Imbalance Service is provided when a difference occurs between the output of a generator located in the Transmission Provider's Control Area and a delivery schedule from that generator to (1) another Control Area or (2) a load within the Transmission Provider's Control Area over a single hour.

(a) In the case of service under Parts II or III of this Tariff, the Transmission Provider must offer this service, to the extent it is physically feasible to do so from its resources or from resources available to it, when Transmission Service is used to deliver energy from a generator located within its Control Area. The Transmission Customer must either purchase this service from the Transmission Provider or make alternative comparable arrangements, which may include use of non-generation resources capable of providing this service, to satisfy its Generator Imbalance Service obligation. To the extent the Control Area operator performs this service for the Transmission Provider, charges to the Transmission Customer are to reflect only a pass-through of the costs charged to the Transmission Provider by that Control Area Operator. The Transmission Provider may charge a Transmission Customer a penalty for either hourly generator imbalances under this Schedule or a penalty for hourly energy imbalances under Schedule 4 for imbalances occurring during the same hour, but not both unless the imbalances aggravate rather than offset each other.

(b) In the case of service under Part IV of this Tariff, the Balancing Authority Operator must offer this service to the Ancillary Service Customer. The Ancillary Service Customer must either purchase this service from the Balancing Authority Operator or make alternative comparable arrangements, which may include use of non-generation resources capable of providing this service, to satisfy its Generator Imbalance Service obligation. The Balancing Authority Operator may charge an Ancillary Service Customer a penalty for either hourly generator imbalances under this Schedule or a penalty for hourly energy imbalances under Schedule 4 for imbalances occurring during the same hour, but not both unless the imbalances aggravate rather than offset each other.

(c) PSCo is both the Transmission Provider and the Balancing Authority (Control Area) Operator for purposes of this Schedule 9.

The Transmission Provider shall establish charges for generator imbalance based on the deviation bands as follows: (i) deviations within +/- 1.5 percent (with a minimum of 2 MW) of the scheduled transaction to be applied hourly to any generator imbalance that occurs as a result of the Transmission Customer's scheduled transaction(s) will be netted on a monthly basis and settled financially, at the end of each month, at 100 percent of incremental or decremental cost,

(ii) deviations greater than +/- 1.5 percent up to 7.5 percent (or greater than 2 MW up to 10 MW) of the scheduled transaction to be applied hourly to any generator imbalance that occurs as a result of the Transmission Customer's scheduled transaction(s) will be settled financially, at the end of each month, at 110 percent of incremental cost or 90 percent of decremental cost, and (iii) deviations greater than +/- 7.5 percent (or 10 MW) of the scheduled transaction to be applied hourly to any generator imbalance that occurs as a result of the Transmission Customer's scheduled transaction(s) will be settled at 125 percent of incremental cost or 75 percent of decremental cost, except that an intermittent resource will be exempt from this deviation band and will pay the deviation band charges for all deviations greater than the larger of 1.5 percent or 2 MW. An intermittent resource, for the limited purpose of this Schedule is an electric generator that is not dispatchable and cannot store its fuel source and therefore cannot respond to changes in system demand or respond to transmission security constraints.

Notwithstanding the foregoing, deviations from scheduled transactions in order to respond to directives by the Transmission Provider, a balancing authority, or a reliability coordinator shall not be subject to the deviation bands identified above and, instead, shall be settled financially, at the end of the month, at 100 percent of incremental and decremental cost. Such directives may include instructions to correct frequency decay, respond to a reserve sharing event, or change output to relieve congestion.

For purposes of this Schedule, incremental cost and decremental cost represent the Transmission Provider’s actual average hourly cost of the last 10 MW dispatched for any purpose, e.g., to supply the Transmission Provider’s Native Load Customers, correct imbalances, or make off-system sales, based on the replacement cost of fuel, unit heat rates, start-up costs (including any commitment and redispatch costs), incremental operation and maintenance costs, and purchased and interchange power costs and taxes, as applicable.

Components of Incremental/Decremental Cost

For purposes of this Schedule, incremental and decremental cost shall equal Transmission Provider's actual average hourly cost of the last 10 MW dispatched for any purpose. The components of such cost include:

Fuel Costs

Incremental fuel costs are calculated using the following criteria. For natural gas generation units, the incremental costs are the estimated daily spot gas commodity price plus the transportation costs to move the commodity to the plants. The inputs for coal fired units are defined as monthly spot coal prices for units that have the ability to take delivery of spot coal, and contract coal prices for plants that have full requirements coal contracts. Oil prices shall be updated when used.

Heat Rate Coefficients

Heat rate coefficients used in determining incremental cost will be consistent with coefficients used in the PSCo Energy Management System (EMS) to dispatch PSCo’s actual generating system and consistent with coefficients used in the production and unit commit/economic dispatch models. These heat rate coefficients are updated as necessary to reflect changes in the operating parameters of plant equipment.

Start up Costs

If a generating unit is started to support short term off-system sales, all the start up costs associated with that unit will be assigned to incremental cost for the first hour of the unit's operation.

Unit Minimums and Contract Minimums

All of PSCo's generating units have minimum levels of operation, and all of the purchased power agreements have minimum scheduling requirements. If a generation resource is started specifically to make an off-system sale or to meet reserve requirements because of such a sale, then the cost of the entire operating range of the resource will be included in incremental cost. If a generation resource is started for Native Load, then only the output above the minimum level is included in incremental cost.

Unit Minimum Run Times

Certain PSCo generating units have minimum run time requirements in place to support reliable unit operation. Such generating units will not be started for off-system sales unless the scheduled and/or contracted duration of the sale is equal to or greater than the minimum run time requirement. Should such off-system sale be curtailed prior to the completion of the generating unit’s minimum run time, any uneconomic costs associated with the remaining unit run time will be assigned to incremental cost. Uneconomic costs are defined as the difference in cost between the cost of energy produced by the unit started for the sale and the cost of the energy displaced by the output of such unit, plus any other additional expenses created by the generating unit started for the sale.

Dispatchable Resources

All dispatchable resources are available for cost assignment to off-system sales. Dispatchable resources are defined as those generating units or long term purchases whose output can be raised or lowered intra-day to respond to changes in loads. If a dispatchable resource is started to provide energy for Native Load, only the cost of output above the resource’s operational or contractual minimum load is available to be assigned to incremental cost.

Variable O&M and Tolling Costs

Variable operation and maintenance (O&M) and tolling costs are assigned to each of the generating units, and when applicable under contract, such costs will be assigned to purchased power resources. These costs will be included in incremental cost.

Intraday Purchases (Not Prescheduled)

All hourly power purchases may be assigned to incremental cost. If an hourly purchase, including all transmission costs, is higher than the incremental cost of a PSCo dispatchable resource, the cost of such purchase will be allocated to incremental cost. If an hourly purchase, including all transmission costs, is lower than the incremental cost of a PSCo dispatchable resource, the cost of the higher priced dispatchable resource will be assigned to incremental cost.

Pumped Storage Costs

The cost of pumped storage energy will be deemed to be the hourly cost of the highest dispatchable resource cost available during the hours of the previous pumping cycle after the highest dispatchable resource cost has been assigned to short term off-system sales for such hours. The hour-by-hour energy for pumping and cost assignment will be documented.

Methodology for Calculating Incremental and Decremental Cost

PSCo uses a computer program (Cost Calculator) to assign costs to serve non-native short term wholesale off-system sales. The program determines the cost to serve short-term off-system sales, including fuel associated with generation and applicable economic purchase transaction costs. The general principle is to assign the most expensive resources to short-term off-system sales first, allowing the less expensive resources to be assigned to PSCo's native load. For each hour, the program stacks the resources that supplied energy during the hour based on their costs in one MW increments. After all costs have been assigned and stacked, the simple average will be calculated for the last 10 MWs to determine PSCo's actual average hourly cost of the last 10 MW dispatched for any purpose.

10 Tax Adjustment Rider for Service by SPS Version: 0.0.0 Effective: 7/30/2010

SCHEDULE 10

Tax Adjustment Rider for Service by Southwestern Public Service Company

The Transmission Customer agrees that there shall be added to any amount calculated pursuant to the Tariff an amount in dollars sufficient to reimburse the Transmission Provider for any amounts paid or payable by it as gross receipts, excise, or similar taxes (other than taxes based upon or measured by net income) on amounts charged to the Transmission Customer for service under this Tariff in order to allow the Transmission Provider, after provision for such taxes, to realize the net amount payable to it under the Tariff.

In addition to any information required to be provided by the Transmission Customer in applying for service under this Tariff, the Transmission Customer shall furnish sufficient information to enable the Transmission Provider to determine whether the Transmission Provider or Transmission Customer is directly responsible for payment of the tax to the taxing authority. Each tax the Transmission Customer must pay and the applicable tax rate shall be identified separately in the Service Agreement. In the event of a change in responsibility for payment of the tax between the Transmission Customer and Transmission Provider or a change in the tax rate, an amendment to the Service Agreement will be filed with the Commission.

11 Generator Step-Up Transformer Charges Version: 0.1.0 Effective: 7/1/2012

SCHEDULE 11

Reserved For Future Use

12 Midwest Independent Transmission System Operator Charges Version: 0.0.0 Effective: 7/30/2010

SCHEDULE 12

Midwest Independent Transmission System Operator, Inc. Charges

Applicable for service by the Northern States Power Companies only

If the load, or any portion of the load associated with a Transmission Customer's transmission service under this OATT is treated under the Midwest Independent Transmission System Operator, Inc ("MISO") OATT or Open Access Transmission and Energy Markets Tariff ("TEMT") such that MISO imposes charges on NSP in connection with such load, Transmission Customer shall reimburse NSP for the full amount of its share of such charges paid by NSP in connection with such load. Such charges include those under the MISO ISO Cost Recovery Adder (MISO Schedule 10), Financial Transmission Rights Administrative Service Cost Recovery Adder (MISO Schedule 16), Energy Market Support Administrative Service Cost Recovery Adder (MISO Schedule 17), Energy Imbalance Charges (Schedule 4), congestion and uplift charges assessed under the OATT or TEMT based on load.

13 NITS on the PSCo Transmission System Version: 0.1.1 Effective: 11/17/2012

Schedule 13

Network Integration Transmission Service on the PSCo Transmission System

The Network Customer shall compensate the Transmission Provider for Network Integration Transmission Service at the applicable charges set forth below in addition to other applicable charges specified in the Tariff. The monthly rate shall be calculated using the formula included in Attachment O – PSCo, Table 2, line 14. The rate is recalculated each year, effective January 1, based on budget or forecasted information, then the rate is recalculated and trued-up based on actual data.

Each month the Network Customer shall pay the Transmission Provider the product of the monthly rate specified above and the Transmission Customer's Monthly Network Load determined in accordance with Section 34.2.

SCHEDULE 13A
Network Integration Transmission Service across the Lamar Tie Line

1. General

Network Integration Transmission Service for deliveries to the Lamar 345 kV HVDC Tie Line (Lamar Tie) for further delivery to Network Load on the SPS or PSCo transmission systems is available and shall be provided pursuant to Part III of this Tariff and this Schedule 13a, and pursuant to the SPP OATT. The Network Customer shall compensate the applicable Transmission Provider(s) for Network Integration Transmission Service across the Lamar Tie and using both the SPS Transmission System and the PSCo Transmission System at the applicable charges set forth below in addition to other applicable charges specified in the Tariff and the SPP OATT.

An Eligible Customer requesting Network Integration Transmission Service across the Lamar Tie must submit an Application consistent with the requirements of section 29.2 that specifies that it is requesting Network Integration Transmission Service across the Lamar Tie. Such requests are subject to the study procedures of section 32. Such Customer must also meet the requirements for Network Integration Transmission Service under the SPP OATT.

Network Integration Transmission Service across the Lamar Tie for further delivery to Network Load on a Transmission Provider's Transmission System shall be subject to capacity limitations of the Lamar Tie.

2. Non-Grandfathered Service

An entity serving load on either the PSCo or SPS system from Designated Network Resources located on the SPS or PSCo system, respectively, shall take service under this Tariff as well as the SPP OATT. An entity that designates Network Resources on the SPS transmission system for delivery across the Lamar Tie to Network Load on the PSCo transmission system shall pay the monthly demand charge on the PSCo Transmission System calculated pursuant to section 34.1.2 and shall receive a 100% discount of the Schedule 9 rate that would otherwise be applicable under the SPP OATT. An entity that designates Network Resources on the PSCo Transmission System for delivery across the Lamar Tie to Network Load on the SPS Transmission System shall pay the monthly demand charge on the SPS Transmission System calculated pursuant to Schedule 9 of the SPP OATT and shall be subject to a 100% discount of the rate that would otherwise be applied under sections 34.1.1 and 34.1.2 of this Tariff. Additional charges for service across the Lamar Tie may be imposed under the SPP OATT.

3. Grandfathered Service

Certain transmission service over the Lamar Tie involving SPS, PSCo, and MEAN is grandfathered under the SPP OATT. Network Integration Transmission Service across the Lamar Tie between SPS and PSCo that is grandfathered under the SPP OATT is subject to the rate treatment specified in this section 3.

To the extent SPS designates Network Resources on the PSCo Transmission System for delivery across the Lamar Tie to SPS Network Load, SPS shall be subject to: (i) the monthly SPP Network Integration Transmission Service demand charge on the SPS Transmission System calculated pursuant to the SPP OATT; and (ii) the monthly demand charge on the PSCo

Transmission System calculated pursuant to section 34.1.2. SPS shall also be subject to any applicable charges under the SPP OATT.

To the extent PSCo designates Network Resources on the SPS Transmission System for delivery across the Lamar Tie to PSCo Network Load, PSCo shall be subject to: (i) the monthly SPP Network Integration Transmission Service demand charge on the SPS Transmission System calculated pursuant to the SPP OATT; and (ii) the monthly demand charge on the PSCo Transmission System calculated pursuant to section 34.1.2. PSCo shall also be subject to any applicable charges under the SPP OATT.

The Municipal Energy Agency of Nebraska (MEAN) shall pay the rates specified in Paragraph 2 of this Schedule 13a for the Network Integration Transmission Service reservation (2 MW) assigned from PSCo to MEAN effective June 1, 2006. MEAN shall also be subject to any applicable charges under the SPP OATT.

For deliveries across the Lamar Tie, deliveries to the Lamar Tie shall be deemed service to Network Load on the supplying system, and charges for such deliveries shall reflect the Network Customer's maximum transfer capacity rights capped at the total transfer capacity of the Lamar Tie; deliveries from the Lamar Tie shall be deemed a Network Resource on the receiving system, and charges for such deliveries shall reflect the Network Customer's maximum transfer capacity rights capped at the total transfer capacity of the Lamar Tie.

The Network Customer's maximum transfer capacity rights shall be used as the Load Ratio Share defined pursuant to section 34.1.1 and as the Transmission Customer's Monthly Network Load defined pursuant to section 34.2.

Schedule 14

Point-To-Point Transmission Losses on the PSCo Transmission System

All PSCo OATT Transmission Customers taking point-to-point Transmission Service shall compensate the Transmission Provider for Real Power Losses determined as specified under Section 15.7 by either: 1) concurrently scheduling in-kind energy as specified in this Schedule 14; or 2) making payments for financial losses calculated as specified in this Schedule 14. For purposes of this Schedule 14, the On-Peak period shall include all hours between HE 0800 and HE 2300, Monday through Saturday, Mountain Prevailing Time (MPT). The Off-Peak period shall include all hours not designated as On-Peak. All Sunday and Holiday hours shall be considered Off-Peak hours. Holidays shall be as defined by NERC, currently New Year's Day, Memorial Day, Independence Day, Labor Day, Thanksgiving Day and Christmas Day.

a. Determination of point-to-point loss obligations. Each Transmission Customer's point-to-point Real Power Loss obligation will be determined on a daily basis for both On-Peak and Off-Peak periods, as follows:

   i. The total of all of the Transmission Customer's scheduled transmission quantities for the relevant period (On-Peak or Off-Peak) will be determined. The scheduled total will be adjusted for curtailments and other adjustments to determine the net total scheduled quantity.
   ii. For each period, the sum determined pursuant to (i) above shall be multiplied by PSCo's current loss rate as specified in Section 15.7.
   iii. For each period, the figure determined pursuant to (ii) above shall be rounded to the nearest whole MW. A partial MW with a value of 0.50 MW or greater shall be rounded up to the next highest whole MW. A partial MW with a value of less than 0.50 MW shall be rounded down to the nearest whole MW.

b. Concurrent scheduling of in-kind energy. In-kind losses shall be scheduled as follows:

   i. In-kind losses must be delivered to a Point of Delivery (POD) on the PSCo Transmission System using a valid point-to-point transmission reservation entered into PSCo's OASIS;
   ii. As provided in the WECC scheduling procedures (currently WECC INT-BPS-001-2, WR8), the loss schedule may either be:
      V. entered separately from the Transmission Service schedule, in which case the electronic tag must clearly identify the transaction as involving a "Loss"; or
      VI. entered on the Transmission Service Schedule, in which case the Accounting section of the Request for Interchange of the electronic tag must clearly denote the provision of "Loss-In-Kind".
   iii. Losses for each period (On-Peak and Off-Peak), as determined under (a) above, shall be allocated proportionally and in whole MW to each hour of the applicable period based on the MW of transmission scheduled for that hour.

It shall be the Transmission Customer's responsibility to adjust its loss schedule to reflect any curtailments or other adjustments to the associated Transmission Service schedule. In the event the Transmission Customer does not adjust its loss schedule to reflect changes in the associated Transmission Service schedule, any excess in-kind losses will not be refunded. To the extent the Transmission Customer does not fully or partially schedule the required quantity of losses in-kind to satisfy the Transmission Customer's loss obligation per period, as determined under (a) above, the under-scheduled quantity in MW shall be billed financially as set forth in (c) below.

c. Financial settlement of losses. A Transmission Customer's point-to-point Real Power Loss obligation may be settled financially, as follows:

i. If the Transmission Customer does not fulfill its loss obligation, in whole or in part, by scheduling in-kind losses, the loss obligation will be settled financially. Any Transmission Customer that does not schedule losses in-kind will be deemed to have elected to settle the loss obligation for that service period financially.

ii. If a Transmission Customer elects to settle all losses financially, the loss settlement amount shall be determined by multiplying the Transmission Customer's loss obligation (in MW), as determined under (a) above, for the applicable period by PSCo's incremental cost of generation for such period. If a Transmission Customer scheduling in-kind losses under (b) above does not schedule the required quantity of losses, the under-scheduled quantity (in MW) for such period will be multiplied by PSCo's incremental cost of generation for such period to determine the settlement amount.

iii. For purposes of this Schedule 14, PSCo's incremental cost of generation shall be the average daily peak or off-peak cost of generation, as applicable, for the last 10 MW generated on PSCo's system for any purpose, calculated as described in Schedule 4, Energy Imbalance Service.

15 Joint Dispatch Trans Svc Version: 0.0.0 Effective: 1/1/2016

Schedule 15

Joint Dispatch Transmission Service

This is an optional service provided by PSCo, subject to the terms and conditions of Part V of this Tariff. For Joint Dispatch Transmission Service Customers meeting the conditions set forth in Part V of this Tariff, no charge shall be assessed for receipt or delivery of energy dispatched pursuant to a Joint Dispatch Agreement with PSCo provided the customer makes Joint Dispatch Transmission Service available to PSCo at the same rates, terms, and conditions as set forth in Part V of this Tariff, this Schedule 15, and any other related schedules or attachments to this Tariff. Joint Dispatch Transmission Service is provided in real-time on a non-firm, as available basis having the lowest curtailment priority.

1) Monthly delivery: the rate or $0.00/kW-month of Reserved Capacity.
2) Weekly delivery: the rate $0.00/kW-week of Reserved Capacity.
3) Daily delivery: the rate $0.00/kW-day of Reserved Capacity.
4) Hourly delivery: On-Peak Hours: the on-peak rate $0.00/MWh of Reserved Capacity. Off-Peak Hours: the off-peak rate $0.00/MWh of Reserved Capacity.

16 Flex Reserve Svc Version: 0.0.0 Effective: 1/1/2015

SCHEDULE 16
Flex Reserve Service

Flex Reserve Service is needed to maintain generation and load balance in the event of a reduction of online wind generation of 100 MW or more in 30 minutes due to reductions in wind speed. Any Transmission Customer or Ancillary Service Customer using wind generation to serve load in the PSCo Balancing Authority Area or exporting the output of wind generation out of the PSCo Balancing Authority Area must purchase or self-supply Flex Reserve Service.

Flex Reserve Service may be provided by the following resources: (i) generating units that are on-line but unloaded, (ii) generating units off-line but capable of starting in 30 minutes, or (iii) interruptible load or other non-generation resources capable of providing this service.

Determination of Flex Reserve Requirement.

A Transmission Customer's Flex Reserve Service requirement shall be the total Flex Reserve Requirement of 411 MW for the PSCo Balancing Authority multiplied by the Customer's proportional share of wind generation in the PSCo Balancing Authority Area, based on the nameplate capacity of installed wind generation in the PSCo Balancing Authority Area to which the customer has rights, as determined on a monthly basis by the Transmission Provider. As conditions change on the PSCo system, PSCo may make a single-issue Section 205 filing with the Commission to update the total Flex Reserve Requirement value.

Flex Reserve Service Charge. The Transmission Customer or Ancillary Service Customer's charge for Flex Reserve Service shall be the Customer's Flex Reserve Service requirement, in kW, multiplied by $74.99/kW/.

The Transmission Customer or Ancillary Service Customer shall purchase Flex Reserve Service in the following amounts:

1) For Point-To-Point Transmission Service: 18.96% of Reserved Capacity
2) For Network Integration Transmission Service: 18.96% of Wind VER nameplate capacity
3) For Balancing Authority Area Ancillary Services: 18.96% of Wind VER nameplate capacity

The charges for Flex Reserve Service are to be based on the rates set forth below, as found in Attachment O – PSCo of this Tariff.

4) Monthly Point-To-Point Delivery: the amount identified on Table 2, line 78 of the PSCo formula rate /kW-month
5) Weekly Point-To-Point Delivery: the amount identified on Table 2, line 79 of the PSCo formula rate /kW-week
6) Daily Point-To-Point Delivery: the amount identified on Table 2, line 80 of the PSCo formula rate /kW-day
7) Daily Point-To-Point Delivery: the amount identified on Table 2, line 81 of the PSCo formula rate /kW-day

8) Hourly Point-To-Point Delivery: the amount identified on Table 2, line 82 of the PSCo formula rate /MWh
9) Hourly Point-To-Point Delivery: the amount identified on Table 2, line 83 of the PSCo formula rate /MWh
10) Network Integration Delivery: the amount identified on Table 2, line 84 of the PSCo formula rate /kW-month
11) Ancillary Services Delivery: the amount identified on Table 2, line 85 of the PSCo formula rate /kW-month

The total demand charge in any day, pursuant to a reservation for Hourly delivery, shall not exceed the rate specified in section (6) above times the highest amount in kilowatts of Reserved Capacity in any hour during such day. In addition, the total demand charge in any week, pursuant to a reservation for Hourly or Daily delivery, shall not exceed the rate specified in section (5) above times the highest amount in kilowatts of Reserved Capacity in any hour during such week.

The Transmission Customer must either purchase this service from the Transmission Provider or make alternative comparable arrangements to satisfy its Flex Reserve Service obligation.

By December 1 of each year, the Transmission Customer is required to provide the Transmission Provider attestation of the nameplate capacity of wind generation owned or controlled by the Transmission Customer and located within the Balancing Authority Area to be used for billing purposes for the following year.

ATTACHMENT A-1

Form of Service Agreement For
Short-Term Firm Point-To-Point Transmission Service

1.0 This Service Agreement, dated as of _____, is entered into, by and between _____ ("Transmission Provider"), and _____ ("Transmission Customer"), all of whom may be referred to individually as "Party" or jointly as "Parties".

2.0 The Transmission Customer has been determined by the Transmission Provider to have a Completed Application for Firm Point-To-Point Transmission Service under the Tariff.

3.0 The Transmission Customer has provided to the Transmission Provider an Application deposit in accordance with the provisions of Section 17.3 of the Tariff.

4.0 Service under this agreement shall commence on the later of (1) the requested service commencement date, or (2) the date on which construction of any Direct Assignment Facilities and/or Network Upgrades are completed, or (3) such other date as it is permitted to become effective by the Commission. Service under this agreement shall terminate on such date as mutually agreed upon by the parties.

5.0 The Transmission Provider agrees to provide and the Transmission Customer agrees to take and pay for Firm Point-To-Point Transmission Service in accordance with the provisions of the Tariff, as it may be amended from time to time, and this Service Agreement.

6.0 Any notice or request made to or by either Party regarding this Service Agreement shall be made to the representative of the other Party as indicated below.

Transmission Provider:	Transmission Customer:
_____	_____
_____	_____
_____	_____
_____	_____

7.0 The Tariff is incorporated herein and made a part hereof.

IN WITNESS WHEREOF, the Parties have caused this Service Agreement to be executed by their respective authorized officials.

Transmission Provider:

By: _____ _____ _____
Name Title Date

Transmission Customer:

By: _____ _____ _____
Name Title Date

SPECIFICATIONS FOR SHORT TERM FIRM POINT-TO-POINT TRANSMISSION SERVICE

1. Term of Transaction: See Item 9
   Start Date: See Item 9
   Termination Date: See Item 9

2. Description of capacity and energy to be transmitted by the Transmission Provider including the electric Control Area in which the transaction originates. See Item 9

3. Point(s) of Receipt: See Item 9
   Delivering Party: See Item 9

4. Point(s) of Delivery: See Item 9
   Receiving Party: See Item 9

5. Maximum amount of capacity and energy to be transmitted (Reserved Capacity): See Item 9.

6. Designation of party(ies) subject to reciprocal service obligation: See Item 9.

7. Name(s) of Intervening Systems providing transmission service: See Item 9.

8. Service under this agreement may be subject to some combination of the charges detailed below. (The appropriate charges for individual transactions will be determined in accordance with the terms and conditions of the Tariff.)

   (a) Transmission Charge: See Item 9
   (b) System Impact and/or Facilities Study Charge: See Item 9
   (c) Direct Assignment Facilities Charge: See Item 9
   (d) Ancillary Services Charges: See Item 9
   (e) Local Distribution Facilities Charges: See Item 9

9. Other: Pursuant to the terms of the Tariff, it is the intent of the Transmission Provider and Transmission Customer that upon execution of this Service Agreement certain Firm Transmission Services may be arranged between the Parties as the opportunity occurs. Transactions under this Service Agreement are for a **duration of less than one year**. Such services will only be those transactions that do no require compensation for Direct Assignment Facilities, System Impact Study and/or Facilities Study Agreement costs, Opportunity costs, or Local Distribution Facilities Charges.

   The OASIS Standards and Protocols states that if a Transmission Provider approves a request for service, the Transmission Customer must confirm. Once the Transmission Customer confirms an approved purchase, a reservation is considered to exist. In order for the Transmission Provider to accurately update and manage ATC for other pending requests for firm transmission service, the Transmission Customer must confirm within the following time frames or the request is deemed withdrawn:

   Transmission Provider approves request Within _____ before start of service

   Customer must confirm within_____ or request is deemed withdrawn

The default times will be as stated below. However, these times may be changed, from time to time, in order to provide for required consistency with reasonable times that are generally accepted in the region and are consistently adhered to by the Transmission Provider.

24 hours or less	One hour
25 – 48 hours	24 hours before transaction begins
2 – 6 days	24 hours
7 – 30 days	72 hours
31 – 90 days	One week
90 days or more	15 days

ATTACHMENT A-2

Form of Service Agreement For
Long-Term Firm Point-to-Point Transmission Service

1.0 This Service Agreement, dated as of _____, is entered into, by and between _____ ("Transmission Provider"), and _____ ("Transmission Customer"), all of whom may be referred to individually as "Party" or jointly as "Parties".

2.0 The Transmission Customer has been determined by the Transmission Provider to have a Completed Application for Firm Point-To-Point Transmission Service under the Tariff.

3.0 The Transmission Customer has provided to the Transmission Provider an Application deposit in accordance with the provisions of Section 17.3 of the Tariff.

4.0 Service under this agreement shall commence on the later of (1) the requested service commencement date, or (2) the date on which construction of any Direct Assignment Facilities and/or Network Upgrades are completed, or (3) such other date as it is permitted to become effective by the Commission. Service under this agreement shall terminate on such date as mutually agreed upon by the parties.

5.0 The Transmission Provider agrees to provide and the Transmission Customer agrees to take and pay for Firm Point-To-Point Transmission Service in accordance with the provisions of the Tariff, as it may be amended from time to time, and this Service Agreement.

6.0 Any notice or request made to or by either Party regarding this Service Agreement shall be made to the representative of the other Party as indicated below.

Transmission Provider:

_____

_____

_____

Transmission Customer:

_____

_____

_____

7.0 The Tariff is incorporated herein and made a part hereof.

IN WITNESS WHEREOF, the Parties have caused this Service Agreement to be executed by their respective authorized officials.

Transmission Provider:

By: _____ _____ _____
Name Title Date

Transmission Customer:

By: _____ _____ _____
Name Title Date

Specifications For Long-Term Firm Point-To-Point Transmission Service

1.0 Term of Transaction: _____

Start Date: _____
Termination Date: _____

2.0 Description of capacity and energy to be transmitted by Transmission Provider including the electric Control Area in which the transaction originates.

_____

3.0 Point(s) of Receipt: _____
Delivering Party: _____

4.0 Point(s) of Delivery: _____
Receiving Party: _____

5.0 Maximum amount of capacity and energy to be transmitted
(Reserved Capacity): _____

6.0 Designation of party(ies) subject to reciprocal service obligation:
_____
_____
_____

7.0 Name(s) of any Intervening Systems providing transmission service:
_____

8.0 Service under this Agreement may be subject to some combination of the charges detailed below. (The appropriate charges for individual transactions will be determined in accordance with the terms and conditions of the Tariff.)

8.1 Transmission Charge: _____
_____

8.2 System Impact and/or Facilities Study Charge(s):
_____
_____

8.3 Direct Assignment Facilities Charge: _____
_____

8.4 Ancillary Services Charges: _____
_____
_____
_____
_____

ATTACHMENT A-3

**Form of Service Agreement For
Resale, Reassignment Or Transfer of
Point-to-Point Transmission Service**

1.0 This Service Agreement, dated as of _____, is entered into, by and between _____ (the Transmission Provider), and _____ (the Assignee).

2.0 The Assignee has been determined by the Transmission Provider to be an Eligible Customer under the Tariff pursuant to which the transmission service rights to be transferred were originally obtained.

3.0 The terms and conditions for the transaction entered into under this Service Agreement shall be subject to the terms and conditions of Part II of the Transmission Provider's Tariff, except for those terms and conditions negotiated by the Reseller of the reassigned transmission capacity (pursuant to Section 23.1 of this Tariff) and the Assignee, to include: contract effective and termination dates, the amount of reassigned capacity or energy, point(s) of receipt and delivery. Changes by the Assignee to the Reseller's Points of Receipt and Points of Delivery will be subject to the provisions of Section 23.2 of this Tariff.

4.0 The Transmission Provider shall credit the Reseller for the price reflected in the Assignee's Service Agreement or the associated OASIS schedule.

5.0 Any notice or request made to or by either Party regarding this Service Agreement shall be made to the representative of the other Party as indicated below.

Transmission Provider:

_____

_____

_____

Assignee:

_____

_____

_____

6.0 The Tariff is incorporated herein and made a part hereof.

IN WITNESS WHEREOF, the Parties have caused this Service Agreement to be executed by their respective authorized officials.

Transmission Provider:

By:

_____	_____	_____
Name	Title	Date

Assignee:

By:

_____	_____	_____
Name	Title	Date

Specifications For The Resale, Reassignment Or Transfer of
Long-Term Firm Point-To-Point Transmission Service

1.0 Term of Transaction: _____

Start Date: _____

Termination Date: _____

2.0 Description of capacity and energy to be transmitted by Transmission Provider including the electric Control Area in which the transaction originates.

_____

3.0 Point(s) of Receipt: _____

Delivering Party: _____

4.0 Point(s) of Delivery: _____

Receiving Party: _____

5.0 Maximum amount of reassigned capacity: _____

6.0 Designation of party(ies) subject to reciprocal service obligation:
_____

_____

_____

_____

7.0 Name(s) of any Intervening Systems providing transmission service:

_____

8.0 Service under this Agreement may be subject to some combination of the charges detailed below. (The appropriate charges for individual transactions will be determined in accordance with the terms and conditions of the Tariff.)

8.1 Transmission Charge: _____

_____

8.2 System Impact and/or Facilities Study Charge(s):

_____

_____

8.3 Direct Assignment Facilities Charge:_____

_____

8.4 Ancillary Services Charges: _____

_____

_____

_____

9.0 Name of Reseller of the reassigned transmission capacity:

_____

ATTACHMENT B

Form of Service Agreement For Non-Firm Point-to-Point Transmission Service

1.0 This Service Agreement, dated as of _____, is entered into, by and between _____ ("Transmission Provider"), and _____ ("Transmission Customer") all of whom may be referred to individually as "Party" or jointly as "Parties".

2.0 The Transmission Customer has been determined by the Transmission Provider to be an Eligible Transmission Customer under Part II of the Tariff and has filed a Completed Application for Non-Firm Point-To-Point Transmission Service in accordance with Section 18.2 of the Tariff.

3.0 Service under this Agreement shall be provided by the Transmission Provider upon request by an authorized representative of the Transmission Customer.

4.0 The Transmission Customer agrees to supply information the Transmission Provider deems reasonably necessary in accordance with Good Utility Practice in order for it to provide the requested service.

5.0 The Transmission Provider agrees to provide and the Transmission Customer agrees to take and pay for Non-Firm Point-To-Point Transmission Service in accordance with the provisions of the Tariff, as it may be amended from time to time, and this Service Agreement.

6.0 Any notice or request made to or by either Party regarding this Service Agreement shall be made to the representative of the other Party as indicated below.

Transmission Provider:

_____

_____

_____

Transmission Customer:

_____

_____

_____

7.0 The Tariff is incorporated herein and made a part hereof.

IN WITNESS WHEREOF, the Parties have caused this Service Agreement to be executed by their respective authorized officials.

Transmission Provider:

By:_____ _____ _____
Name Title Date

Transmission Customer:

By:_____ _____ _____
Name Title Date

ATTACHMENT C

Methodology To Assess Available Transfer Capability

NSP and SPS System ATC Methodologies:

The NSP Companies are members of the Midwest Independent Transmission System Operator, Inc. (MISO) RTO. Southwestern Public Service Company (SPS) is a member of the Southwest Power Pool (SPP) RTO. All ATC calculations and postings for the NSP Companies' and SPS transmission systems are performed by their respective RTOs and addressed in the RTO tariffs.

PSCo System ATC Methodology:

General Overview:

Public Service Company of Colorado (PSCo) is a registered Transmission Provider and Balancing Authority (BA) within the Western Interconnection and the Western Electricity Coordination Council (WECC). As PSCo is a vertically integrated electric utility, it is also a Generation Owner and Load Serving Entity (LSE). The PSCo transmission network is located primarily along the Front Range of Colorado with extensions west to Grand Junction and south to Alamosa Colorado. The main transmission voltages are 230-kV and 115-kV. The BAs adjacent to PSCo are Western Area Power Administration-Rocky Mountain Region and Public Service Company of New Mexico (PNM). PSCo coordinates its ATC calculations with these neighboring transmission providers as described in the next paragraph. PSCo is also connected asynchronously to the SPS BA in the SPP region through a 345 kV tie line and an AC/DC/AC converter station at Lamar, Colorado. SPS and PSCo are both operating company subsidiaries of Xcel Energy Inc. and coordinate ATC postings for tie line capacity.

PSCo has ownership in the jointly owned western slope transmission facilities extending from the Craig/Hayden area in Northwestern Colorado south to the Four Corners area. PSCo also has ownership in four jointly owned transmission cut planes or TOT paths within Colorado - TOTs 2A, 3, 5, and 7. The critical TOT path TTC levels are developed seasonally and coordinated and agreed to by the owners of the TOT facilities, presented to the Colorado Coordinated Planning Group (CCPG), and approved through the WECC Operating Transfer Capability (OTC) Policy Committee process. The jointly owned TOT paths have contractually defined ownership and transmission utilization percentages. TTC development is in accordance with established WECC and NERC standards. PSCo reserves Transmission Reliability Margin (TRM) for transmission associated with reserve group activations under the Rocky Mountain Reserve Sharing Group (RMRG). At the present time, PSCo is not utilizing Capacity Benefit Margin (CBM) on any of its transmission paths when calculating ATC.

PSCo uses the NERC approved contract path methodology.

Reference Documents:

NERC Standards:

Applicable NERC Standards, including FAC-013, MOD-001, MOD-004, MOD-008, MOD-029

NERC Documents:

Available Transfer Capability Definitions and Determination

WECC Documents:

The link to the WECC OTC PC handbook, which includes their scope plus review and approval procedures is:

http://www.wecc.biz/committees/BOD/OTCPC/Shared%20Documents/OTCPC%20HANDBOOK.pdf.

Transmission Function Documents:

Transmission Facility Rating Methodology

Order No. 890 Requirements:

1. Information Concerning ATC Calculation Methodology/Algorithms

a. Definitions:

From NERC Glossary:

Available Transfer Capability (ATC) - A measure of the transfer capability remaining in the physical transmission network for further commercial activity over and above already committed uses. It is defined as Total Transfer Capability less Existing Transmission Commitments (including retail customer service), less a Capacity Benefit Margin, less a Transmission Reliability Margin, plus Postbacks, plus counterflows.

Total Transfer Capability (TTC) - The amount of electric power that can be moved or transferred reliably from one area to another area of the interconnected transmission systems by way of all transmission lines (or paths) between those areas under specified system conditions.

Capacity Benefit Margin (CBM) - The amount of firm transmission transfer capability preserved by the transmission provider for Load-Serving Entities (LSEs), whose loads are located on that Transmission Service Provider's system, to enable access by the LSEs to generation from interconnected systems to meet generation reliability requirements. Preservation of CBM for an LSE allows that entity to reduce its installed generating capacity below that which may otherwise have been necessary without interconnections to meet its generation reliability requirements. The transmission transfer capability preserved as CBM is intended to be used by the LSE only in times of emergency generation deficiencies.

Transmission Reliability Margin (TRM) - The amount of transmission transfer capability necessary to provide reasonable assurance that the interconnected transmission network will be

secure. TRM accounts for the inherent uncertainty in system conditions and the need for operating flexibility to ensure reliable system operation as system conditions change.

Available Transfer Capability Implementation Document (ATCID) - A document that describes the implementation of a methodology for calculating ATC or AFC, and provides information related to a Transmission Service Provider's calculation of ATC or AFC.

Other Definitions:

Existing Transfer Commitments (ETC) - Committed uses of a Transmission Service Provider's Transmission system considered when determining ATC or AFC.

ATC horizons:

The three horizons used by PSCo are:

i. **Scheduling Horizon**: At PSCo this period is defined to be the period of time beginning with the current hour and extending a total of eight hours.

ii. **Operating Horizon:** At PSCo this period begins at end of the Scheduling Horizon and extends through the end of the last day that has been or is being prescheduled.

iii. **Planning Horizon:** This period begins at the end of the Operating Horizon and extends approximately four years into the future.

b. Mathematical Algorithms Used to Calculate ATC

The formulas used by PSCo to calculate ATC are shown below and in PSCo's ATCID for the Scheduling, Operating and Planning horizons and also posted on the PSCo OASIS site:

http://www.oatioasis.com/PSCO/PSCOdocs/PSCO_ATC_Information.pdf

Note that CBM and TRM_U are currently zero for the PSCo Balancing Authority Area.

ATC Calculation When calculating firm ATC for an ATC Path for a specified period, PSCo uses the following algorithm:

$$ATC_F = TTC – ETC_F – CBM – TRM + Postbacks_F + counterflows_F$$

Where

ATC_F is the firm Available Transfer Capability for the ATC Path for that period.

TTC is the Total Transfer Capability of the ATC Path for that period.

ETC_F is the sum of existing firm commitments for the ATC Path during that period.

CBM is the Capacity Benefit Margin for the ATC Path during that period.

TRM is the Transmission Reliability Margin for the ATC Path during that period.

$Postbacks_F$ are changes to firm Available Transfer Capability due to a change in the use of Transmission Service for that period, as defined in Business Practices.

$Counterflows_F$ are adjustments to firm Available Transfer Capability as determined by the PSCo and specified in the ATCID.

When calculating non-firm ATC for an ATC Path for a specified period, PSCo uses the following algorithm:

$$ATC_{NF} = TTC – ETC_F – ETC_{NF} – CBM_S – TRM_U + Postbacks_{NF} + counterflows_{NF}$$

Where:

ATC_{NF} is the non-firm Available Transfer Capability for the ATC Path for that period.

TTC is the Total Transfer Capability of the ATC Path for that period.

ETC_F is the sum of existing firm commitments for the ATC Path during that period.

ETC_{NF} is the sum of existing non-firm commitments for the ATC Path during that period.

CBM_S is the Capacity Benefit Margin for the ATC Path that has been scheduled during that period.

TRM_U is the Transmission Reliability Margin for the ATC Path that has not been released for sale (unreleased) as non-firm capacity by the Transmission Service Provider during that period.

$Postbacks_{NF}$ are changes to non-firm Available Transfer Capability due to a change in the use of Transmission Service for that period, as defined in Business Practices.

$Counterflows_{NF}$ are adjustments to non-firm Available Transfer Capability as determined by the Transmission Service Provider and specified in its ATCID.

<u>ETC Calculation</u> When calculating ETC for firm Existing Transmission Commitments (ETC_F) for a specified period for an ATC Path, PSCo uses the algorithm below:

$$ETC_F = NL_F + NITS_F + GF_F + PTP_F + ROR_F + OS_F$$

Where:

NL_F is the firm capacity set aside to serve peak Native Load forecast commitments for the time period being calculated, to include losses, and Native Load growth, not otherwise included in Transmission Reliability Margin or Capacity Benefit Margin.

$NITS_F$ is the firm capacity reserved for Network Integration Transmission Service serving Load, to include losses, and Load growth, not otherwise included in Transmission Reliability Margin or Capacity Benefit Margin.

GF_F is the firm capacity set aside for grandfathered Transmission Service and contracts for energy and/or Transmission Service, where executed prior to the effective date of a Transmission Service Provider's Open Access Transmission Tariff or "safe harbor tariff."

PTP_F is the firm capacity reserved for confirmed Point-to-Point Transmission Service.

ROR_F is the firm capacity reserved for Roll-over rights for contracts granting Transmission Customers the right of first refusal to take or continue to take Transmission Service when the Transmission Customer's Transmission Service contract expires or is eligible for renewal.

OS_F is the firm capacity reserved for any other service(s), contract(s), or agreement(s) not specified above using Firm Transmission Service as specified in the ATCID.

When calculating ETC for non-firm Existing Transmission Commitments (ETC_{NF}) for all time horizons for an ATC Path PSCo uses the following algorithm:

$$ETC_{NF} = NITS_{NF} + GF_{NF} + PTP_{NF} + OS_{NF}$$

Where:

$NITS_{NF}$ is the non-firm capacity set aside for Network Integration Transmission Service serving Load (i.e., secondary service), to include losses, and load growth not otherwise included in Transmission Reliability Margin or Capacity Benefit Margin.

GF_{NF} is the non-firm capacity set aside for grandfathered Transmission Service and contracts for energy and/or Transmission Service, where executed prior to the effective date of a Transmission Service Provider's Open Access Transmission Tariff or "safe harbor tariff."

PTP_{NF} is non-firm capacity reserved for confirmed Point-to-Point Transmission Service.

OS_{NF} is the non-firm capacity reserved for any other service(s), contract(s), or agreement(s) not specified above using non-firm transmission service as specified in the ATCID.

2. Process Flow Diagram Illustrating ATC Calculation Steps

See attached diagram for the PSCo ATC process flow, which includes the formulas from section 1, and also illustrates how the Open Access Technology International, Inc. (OATi) webTrans system is used to automate PSCo ATC calculations and support evaluation of transmission service requests. The OATi webTrans system is a software tool that PSCo Transmission Operations uses to process real time updates to path ATC values. WebTrans then sends the information to the PSCo OASIS to update transmission path offerings.

3. Detailed Explanation of Calculation of Each ATC Component

a. General TTC Calculation Methodology

TTC as used by PSCo is the smaller of (i) the lesser of the maximum allowable contract capacity or (ii) the reliability limit as determined under b. below.

Where it is impossible to actually simulate a reliability-limited flow in a direction counter to prevailing flows (on an alternating current Transmission line), PSCo sets the TTC for the non-prevailing direction equal to the TTC in the prevailing direction.

For an ATC Path whose TTC varies due to simultaneous interaction with one or more other paths, a nomogram is developed describing the interaction of the paths and the resulting TTC under specified conditions.

For ATC Paths whose path rating, adjusted for seasonal variance, was established, known and used in operation since January 1, 1994, and no action has been taken to have the path rated using a different method, PSCo sets the TTC at that previously established amount.

b. TTC Calculation Methodology and Assumptions

PSCo uses the approach outlined in Standard MOD-029-1a — Rated System Path Methodology including R2, and also follows the "Procedures for Regional Planning Project Review and Rating Transmission Facilities" as approved by WECC. Upon completion of the procedures in this document, WECC normally grants a TTC rating effective when a new transmission facility goes in service.

The TTC levels are based on the highest achievable flows, on a non-simultaneous basis, which meet WECC and NERC reliability criteria using the appropriate seasonal WECC approved load flow base cases from the WECC databank. The base cases represent each WECC Balancing Authority Area economically dispatched to meet its load and interchange (including losses) commitments. Generation dispatch and load levels are modified in the Colorado area, within seasonal forecast limits, as necessary to maximize TTC for the path under study. Generation dispatch is varied within the maximum and minimum units' limits to stress the path under study while still maintaining acceptable voltage profile in the study cases. In the situation where the maximum TTC is achieved only under a less than maximum seasonal load forecast, local loads are increased (and generation varied accordingly) in the study models to identify real time path transfer limits. Per the WECC and NERC methodology, system facilities are modeled in their normal configuration for the period under study with facilities known to be out of service represented appropriately. Contingencies are run on the base case, in a round robin manner, to determine the highest TTC meeting NERC and WECC criteria for the path under study. For planned and contingency (unplanned) outages, path limits, usually less than the TTC for the season, are developed in advance for conditions that are known and for N-1 prior outage conditions as well. All facilities are modeled in their normal PSCo configuration for the season under study.

TOT path TTC levels are developed at least annually by the TOT owners, and as appropriate presented to the CCPG, and approved through the WECC OTC Policy Committee process. Internal paths are reviewed periodically using the approach presented in the Transmission Facility Rating Methodology document. TTC development, both internally and on jointly owned

TOTs, occurs in accordance with established WECC and NERC standards including WECC's "Procedures for Regional Planning Project Review and Rating Transmission Facilities". The TOT 2A path in Colorado has a dynamic limit that is frequently well below maximum in one direction (North to South) due to local load levels. To avoid over-selling in this direction, the ATC calculation has been adjusted on this path by reducing the PSCo contractual transmission access rights on the path with moderately heavy local loads represented in the path OTC curves.

Except where otherwise specified within NERC Reliability Standard MOD-029-1a, base case generation and Load levels within the updated power flow model are adjusted to determine the TTC (maximum flow or reliability limit) that can be simulated on the ATC Path while at the same time satisfying all planning criteria contingencies as follows:

> When modeling normal conditions, all Transmission Elements will be modeled at or below 100% of their continuous rating.
>
> When modeling contingencies the system shall demonstrate transient, dynamic and voltage stability, with no Transmission Element modeled above its Emergency Rating.
>
> Uncontrolled separation shall not occur.

Where it is impossible to actually simulate a reliability-limited flow in a direction counter to prevailing flows (on an alternating current Transmission line), set the TTC for the non-prevailing direction equal to the TTC in the prevailing direction. If the TTC in the prevailing flow direction is dependant on a Special Protection System (SPS), set the TTC for the non-prevailing flow direction equal to the greater of the maximum flow that can be simulated in the non-prevailing flow direction or the maximum TTC that can be achieved in the prevailing flow direction without use of a SPS.

For an ATC Path whose capacity is limited by contract, TTC on the ATC Path is set at the lesser of the maximum allowable contract capacity or the reliability limit as determined by above.

For an ATC Path whose TTC varies due to simultaneous interaction with one or more other paths, a nomogram will be developed describing the interaction of the paths and the resulting TTC under specified conditions.

PSCo shall identify when the TTC for the ATC Path being studied has an adverse impact on the TTC value of any existing path. This is done by modeling the flow on the path being studied at its proposed new TTC level simultaneous with the flow on the existing path at its TTC level while at the same time honoring the reliability criteria outlined above. PSCo shall include the resolution of this adverse impact in its study report for the ATC Path.

Where multiple ownership of Transmission rights exists on an ATC Path, PSCO will allocate TTC of that ATC Path in accordance with the contractual agreement made by the multiple owners of that ATC Path.

For ATC Paths whose path rating, adjusted for seasonal variance, was established, known and used in operation since January 1, 1994, and no action has been taken to have the path rated using a different method, PSCo sets the TTC at that previously established amount.

PSCo creates a study report that describes the steps above that were undertaken, including the contingencies and assumptions used, when determining the TTC and the results of the study. Where three phase fault damping is used to determine stability limits, that report also identifies the percent used and include justification for use unless specified otherwise in the ATCID.

c. Databases used in TTC Assessments

The TTC of PSCo owned and operated lines are determined using the WECC databank of power flow base cases. The specific case selected is the most recent case representing the season and year of interest. 100 percent of peak seasonal forecast base cases are first used with local area load reductions also studied for sensitivity to represent off peak conditions or to maximize path TTC as mentioned above. All facilities are modeled in their normal PSCo configuration for the season under study.

The database for the TOT OTC studies is the WECC power flow data bank. Seasonal studies for the TOT paths use the latest approved WECC base cases. The western slope loads and Nucla generation are varied in the TOT 2A studies to develop the TOT 2A limits as a function of local load and Nucla generation. Nucla is a generation plant owned by Tri-State Generation and Transmission Cooperative (Tri-State) in southwestern Colorado whose generation level impacts the TOT 2A OTC limits.

d. Definition of ETC

ETC definition and calculation methodology is described in detail in sections 1a. and 1b. respectively, above.

e. Calculation Methodology Used for Transmission Set Aside

PSCo does not use Transmission Set Aside at this time when calculating ATC. Native load service is tagged.

f. Explanation of AFC Methodology

Not applicable. PSCO does not use an AFC methodology.

g. Explanation of TRM Definition and Methodology

i. Definition and Methodology

PSCo uses the methodology of TRM from the appropriate NERC standards including MOD-008-1.

TRM is defined in 1a. above. PSCo reserves TRM only to support the activation of operating reserves, and does not utilize TRM to address the other contingencies and uncertainties. More specifically, PSCo reserves TRM as needed to import generation in the case of loss of internal system generation and to meet its obligations to deliver power to other Members of the RMRG. These TRM allocations are based directly on the PSCo largest single hazard, other Members' largest hazard and the supporting RMRG members' deliveries over the paths.

ii. **Databases Used for TRM assessments**

The RMRG Members reserve obligations (quotas) are recalculated twice a year and go into effect on or about April 1 and October 1 for the Summer and Winter seasons, respectively. The database used is the RMRG approved seasonal reserve quotas and supporting information plus the WECC database of approved power flow cases. Powerflow cases are run on the most recent seasonal power flow case to evaluate the delivery of contingency reserves for the TRM assessment.

h. Narrative Explanation of CBM Practice

PSCo has established CBM of zero on all transmission paths. Calculation of CBM needs is based upon the requirements of NERC Reliability Standard MOD-004-1

PSCo ATC Calculation Flow Diagram

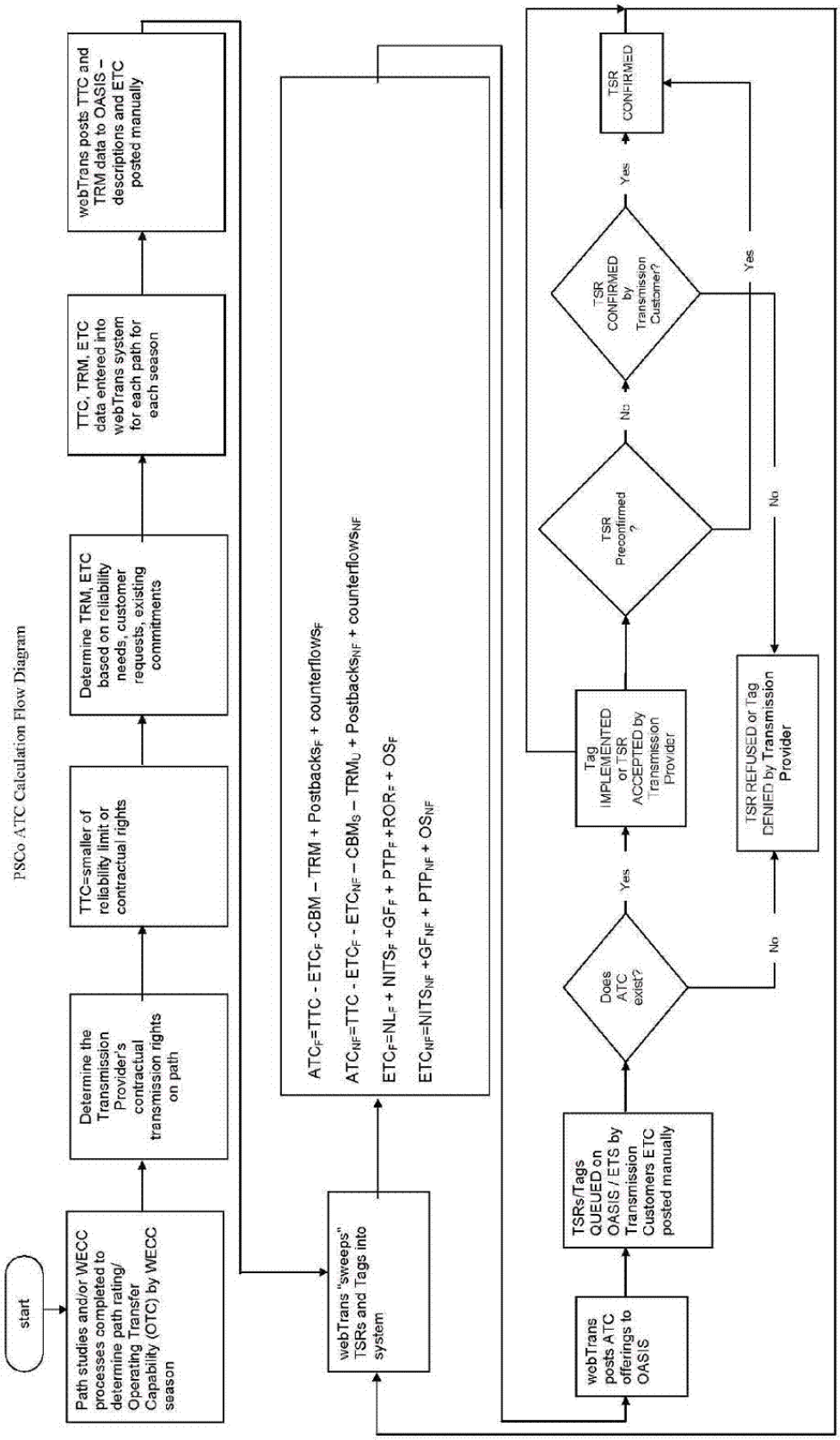

ATTACHMENT D

Methodology for Completing a System Impact Study

The Transmission Provider will respond to a valid application for Firm Transmission Service by performing studies, when necessary, that assess the impact of providing the requested service on the Transmission Provider's Transmission System, and identify, to the degree practicable, any significant impacts on other transmission systems. The assessment of the impact will take into account the Transmission Provider's reliability requirements to serve its Native Load and Network Customers, prior contractual commitments and previously- submitted applications for Firm Transmission Service under this Tariff.

The Transmission Provider will perform the system impact study using Good Utility Practice and the engineering and operating principles, standards, guidelines and criteria of the Transmission Provider, the applicable Regional Reliability Council, any entity of which the Transmission Provider is a member and is approved by the Commission to promulgate or apply regional or national reliability planning standards that may exist in the future. Principal measures used to gauge the impact of the requested Firm Transmission Service on the Transmission Provider's Transmission System will include pre- and post-contingency transmission element loadings and bus voltage levels, dynamic stability, and voltage stability. Evaluations will be performed simulating appropriate combinations of load level and generation pattern in accordance with established Regional Reliability Council planning and operating standards.

Impacts on the Transmission Provider's Transmission System will be computed by the Transmission Provider using powerflow models developed by the Regional Reliability Council. Models developed by the Regional Reliability Council use transmission system data submitted by members and include committed new facilities and reported firm transfers in the base case. The Transmission Provider will modify the Regional Reliability Council models as needed to include additional detail, additional firm transfers, or other more current information on the transmission system.. When performing System Impact Studies, the Transmission Provider will also identify whether the availability of transmission service is dependent upon construction of committed new facilities represented in the base case. In this case, the procedures in Section 20 shall apply if the new facilities are not constructed as assumed in the base case.

The Regional Reliability Council prepares power flow models that represent system conditions up to ten years into the future. The Transmission Provider will select power flow models for study that most closely align themselves with the service commencement date and the period of the requested Firm Transmission Service.

Where operating guides can be used to increase the available transmission transfer capability, implementation of such guides will be simulated. If the operating procedure is to be exercised in another control area, the Applicant for transmission service will need to contact the other control area to determine the general availability of the operating procedure.

If the system impact study indicates that additions or upgrades to the Transmission Provider's Transmission System are needed to supply the Applicant's service request, the Applicant may exercise any of the options outlined in Section 19 of the Tariff.

E Index of P-T-P Transmission Service Customers Version: 0.0.0 Effective: 7/30/2010

ATTACHMENT E

Index of Point-To-Point Transmission Service Customers

See Transmission Provider's Electric Quarterly Report at the following Internet Address:

http://www.ferc.gov/docs-filing/eqr/data/spreadsheet.asp

ATTACHMENT F

Form of Service Agreement For
Network Integration Transmission Service

1.0 This Service Agreement, dated as of _____, is entered into, by and between _____ ("Transmission Provider"), and _____ ("Network Customer") all of whom may be referred to individually as "Party" or jointly as "Parties".

2.0 The Network Customer has been determined by the Transmission Provider to have a Completed Application for Network Integration Transmission Service under the Tariff.

3.0 The Network Customer has provided to the Transmission Provider an Application deposit in accordance with the provisions of Section 29.2 of the Tariff.

4.0 The Network Customer and the Transmission Provider have completed all necessary technical arrangements in accordance with the provisions of Sections 29.3 and 29.4 of the Tariff.

5.0 The Network Customer has executed a Network Operating Agreement with the Transmission Provider in accordance with Section 35.2 of the Tariff.

6.0 Service under this agreement shall commence on the later of: (1) _____, or (2) the date on which construction of any Direct Assignment Facilities, Network Upgrades, and/or Local Distribution Facilities are completed, or (3) such other date as it is permitted to become effective by the Commission. Service under this agreement shall terminate on _____.

7.0 The Transmission Provider agrees to provide and the Network Customer agrees to take and pay for Network Integration Transmission Service in accordance with the provisions of Part III of the Tariff and this Service Agreement, as they may be amended from time to time.

8.0 Any notice or request made to or by either Party regarding this Service Agreement shall be made to the representative of the other Party as indicated below.

Transmission Provider:

_____

_____

_____

Network Customer:

_____

_____

_____

9.0 The Tariff, specifications for Network Integration Transmission Service, and Network Operating Agreement are incorporated herein and made a part hereof.

IN WITNESS WHEREOF, the Parties have caused this Service Agreement to be executed by their respective authorized officials.

Transmission Provider:

By: _____ _____ _____
Name Title Date

Network Customer:

By: _____ _____ _____
Name Title Date

Specifications for Network Integration
Transmission Service

1.0 Term of Network Service: _____
Start Date: _____
Termination Date: _____

2.0 Description of capacity and energy to be transmitted by Transmission Provider including the electric Control Area in which the transaction originates:
_____

3.0 Network Resources:
_____
_____
_____
_____
_____
_____
Total Network Resources: _____

4.0 Network Loads:
_____
_____
_____
_____
_____
_____
Total Network Loads:_____

5.0 Designation of party(ies) subject to reciprocal service obligation:
_____
_____
_____

6.0 Service under this Agreement may be subject to some combination of the charges detailed below. (The appropriate charges for individual transactions will be determined in accordance with the terms and conditions of the Tariff.)

6.1 Load Ratio Share of Annual Transmission Revenue Requirement:
_____

6.2 System Impact and/or Facilities Study Charge(s):
_____

6.3 Direct Assignment Facilities Charge:

6.4 Local Distribution Facilities Charge:

6.5 Ancillary Services Charges:

ATTACHMENT G

Form of Network Operating Agreement

[**Note:** It may be necessary to include additional provisions or revise the provisions of this Network Operating Agreement to take into account the particular circumstances of a Network Customer. Northern States Power Companies ("NSP"), Public Service Company of Colorado ("PSCo") and Southwestern Public Service Company ("SPS") therefore reserve the right to modify this form of Network Operating Agreement for individual Transmission Customers.]

This Network Operating Agreement, dated as of _____, is made and entered by and between _____ ("Transmission Provider"), and _____ ("Network Customer") all of whom may be referred to individually as "Party" or jointly as "Parties".

WHEREAS, The Network Customer has been determined by the Transmission Provider to have a Completed Application for Network Integration Transmission Service under Part III of the Tariff; and

WHEREAS, The terms and conditions under which the Network Customer shall operate its facilities, and the technical and operational matters associated with implementation of Part III of the Tariff are to be specified in this Network Operating Agreement in accordance with Section 35.2 of the Tariff;

NOW THEREFORE, In consideration of the mutual agreements set forth below, the Network Customer and the Transmission Provider agree as follows:

1.0 <u>Purpose of Agreement and General Requirements</u>

By this agreement, the Transmission Provider and Network Customer agree that the provisions of this Network Operating Agreement ("NOA") and the Network Integration Transmission Service Agreement ("Service Agreement") govern the Transmission Provider's provision of Network Integration Transmission Service to the Network Customer in accordance with the Open Access Transmission Tariff ("Tariff"), as it may be amended from time to time. This NOA requires the Parties to: (i) operate and maintain equipment necessary for incorporating the Network Customer within the Transmission Provider's Transmission System including, but not limited to, remote terminal units, metering, communications equipment and relaying equipment; (ii) transfer data including, but not limited to, heat rates, fuel costs, and operational characteristics of Network Resources, generation schedules for Network Resources, interchange schedules, unit outputs for redispatch required under Section 33 of the Tariff, voltage schedules, loss factors and other real time data, between their respective control centers; (iii) use software programs required for data links and constraint dispatching; (iv) exchange data on forecasted loads and resources necessary for planning and

operation; and (v) address any other technical and operational considerations required for implementation of the Tariff, including scheduling protocols.

The Network Customer shall: (i) operate as a Control Area under applicable guidelines of the North American Electric Reliability Council ("NERC") and the applicable regional reliability council; (ii) satisfy its control area requirements, including the provision of all Ancillary Services, by contracting with the Transmission Provider; or (iii) satisfy its Control Area requirements, including all Ancillary Services and/or Interconnected Operations Services ("IOS"), by providing them itself or by contracting with another entity that can satisfy those requirements in a manner that is consistent with Good Utility Practice and satisfies the standards of NERC and the regional reliability council. The Network Customer shall plan, construct, operate and maintain its facilities and Transmission System in accordance with Good Utility Practice, which shall include, but not be limited to, all applicable guidelines of NERC and the regional reliability council, as they may be modified from time to time and any generally accepted practices in the region that are consistently adhered to by the Transmission Provider.

Unless specified herein, capitalized terms shall refer to terms defined in the Tariff. When the terms Load Responsibility, Regulating Margin, Most Severe Single Contingency ("MSSC"), First Contingency, Spinning Reserves, Supplemental Reserves and Operating Reserves are used in this NOA, the regional reliability council definitions of those terms apply.

The Network Customer acknowledges that the Transmission Provider may revise this NOA as necessary to incorporate changes to the Transmission Provider's Control Area requirements and the Network Customer shall conform and operate according to the revised NOA.

2.0 Network Operating Committee

(a) Membership - The Network Operating Committee shall be composed of representatives from the Network Customers taking service under the Tariff and the Transmission Provider.

(b) Responsibilities - The Network Operating Committee shall: (1) adopt rules and procedures consistent with this NOA and the Tariff governing operating and technical requirements necessary for implementing the Tariff; (2) review Network Resources and Network Loads on an annual basis in order to assess the adequacy of the Transmission System; and (3) obtain from the Transmission Provider the Transmission Provider's operating policies, procedures, and guidelines for network interconnection and operation, (4) adopt standards for provision of Ancillary Services and/or IOS, and develop non-compliance procedures and penalties.

(c) Authority - The Network Operating Committee will not have any authority to modify or bypass the Transmission Provider's Open Access Transmission Tariff or the Service Agreements under such Tariff. The Network Operating Committee, through their actions, will ensure that the reliability criteria of NERC and the regional reliability council are met.

3.0 Regulation and Frequency Response

The Network Customer shall meet its proportional share of Regulating Margin by either: (a) purchasing Regulation and Frequency Response Service from the Transmission Provider pursuant to Schedule 3 of the Tariff; or (b) contributing or arranging to have a third party contribute generating resources to meet the Regulating Margin requirement for the current year as follows:

If the Network Customer is located within the PSCo or NSP Control Areas, Network Customer must contribute generating resources in the amount specified in Schedule 3 of the Tariff.

If the Network Customer is located within the SPS Control Area, Customer must contribute generating resources according to the following formula:

$$\text{NCRMR} = \frac{\text{CARM} \times \text{NC maximum demand}}{\text{CA maximum demand}}$$

CA: Control Area
CARM: Control Area Regulating Margin
NC: Network Customer
NCRMR: Network Customer Regulating Margin Requirement

Should the Network Customer's load include major loads not conforming to the general pattern of the control area's load, i.e., arc furnace load, additional Regulating Margin may be required to be provided by the Network Customer.

A Network Customer that meets it proportional share of Regulating Margin by Alternative (b) above shall also meet the requirements of Section 5.0 below.

4.0 Operating Reserve

The Network Customer shall meets its proportional share of Operating Reserve by either: (1) purchasing Operating Reserve Services from the Transmission Provider pursuant to Schedules 5 and 6 of the Tariff; or (2) meeting or arranging to have a third party meet the Operating Reserve requirement. A Network Customer that meets its proportional share of Operating Reserve by alternative (2) above shall also meet the requirements of Section 5.0 below. The Operating Reserve requirement is as specified by the regional reliability council as implemented by the Transmission Provider. Inasmuch as the Transmission Provider is obligated to meet these requirements, as they may be modified from time to time, the Network Customer recognizes and agrees that its proportional share of the Operating Reserve requirement may change to reflect such modification.

In order to facilitate the use of Operating Reserve, the Network Customer shall have available unloaded reserve firm transmission capacity at least equal to that Operating Reserve amount. Such transmission may be loaded with interruptible energy so that, upon interruption of the energy, transmission service is available to replace such energy from the Operating Reserve.

5.0 Requirements to Contribute to System Regulation and Operating Reserve

The Network Customer shall operate its generating resources in a manner similar to that of the Transmission Provider including following voltage schedules, providing free governor response, meeting power factor requirements at the point of interconnection with the Transmission Provider's system, and such other criteria as may be developed by the Transmission Provider, the Network Operating Committee, or required by the NERC and the regional reliability council. The Network Customer shall pay the cost of modification of Transmission Provider's computer hardware and software to accommodate the Network Customer's contribution to Regulating Margin and Operating Reserve. Any resources used by the Network Customer to meet its proportional share, whether the Network Customer's Network Resources or a third party's generating resources, shall meet the same requirements as the Transmission Provider's generating resources used to meet the Regulating Margin and Operating Reserve requirements, including, but not limited to, automatic generation control capability, ramp rate, and governor response, and are subject to random testing, and if applicable, a monthly start-up test.

6.0 Redispatch to Manage Transmission System Constraints

If the Transmission Provider determines that redispatching Network Resources, including reductions in off-system purchases, to relieve an existing or potential transmission system constraint is the most effective way to ensure the reliable operation of the Transmission System, the Transmission Provider will redispatch the Transmission Provider's and the Network Customer's Network Resources on a least-cost basis, without regard to the ownership of such resources. The Transmission Provider will apprise the Network Customer of its redispatch practices and procedures as they may be modified from time to time.

The Network Customer will submit verifiable incremental and decremental cost data for its Network Resources that estimates the cost to the Network Customer of changing the generation output of each of its Network Resources to the Transmission Provider. These costs will be used, along with similar data for the Transmission Provider's resources, as the basis for least-cost redispatch. The Transmission Provider's grid operation staff will keep this data confidential, including from the Transmission Provider's marketing staff. If the Network Customer experiences changes to its costs, the Network Customer must submit those changes to the Transmission Provider's energy control center. The Transmission Provider will implement least-cost redispatch consistent with its existing contractual obligations and its current practices and procedures for its own resources. The Network Customer is obligated to respond immediately to requests for redispatch from the Transmission Provider's energy control center.

Once redispatch has been implemented, the Transmission Provider will book in a separate account costs incurred by both the Transmission Provider and the Network Customer based on the submitted incremental and decremental costs. The Transmission Provider and the Network Customer will each bear a proportional share of the total redispatch cost based on their then-current Load Ratio Shares. The Transmission Provider will bill or credit the Network Customer's monthly bill as appropriate.

7.0 Maintenance of Facilities

(a) The Network Operating Committee shall establish procedures to coordinate the maintenance schedules of the generating resources and transmission and substation facilities, to the greatest extent practicable, to ensure sufficient transmission resources are available to maintain system reliability and reliability of service. By November 1 of each year, the Network Customer shall provide to the Transmission Provider the maintenance schedules and planned outages of each Network Resource for the next five years. Thirty (30) days in advance of each annually forecasted maintenance outage, the Network Customer shall provide the Transmission Provider confirmation of such outage. Such information shall include, but not be limited to, the expected time the unit will be separated from the system and the time at which the unit is available for (1) parallel operation, (2) loading, and (3) if applicable, to be put on automatic generation control.

(b) The Network Customer shall obtain: (1) concurrence from the Transmission Provider at least 72 hours before beginning any scheduled maintenance of its facilities; and (2) clearance from the Transmission Provider when the Network Customer is ready to begin maintenance on a Network Resource, transmission line, or substation. The Network Customer shall immediately notify the Transmission Provider at the time when any unscheduled or forced outages occur and again when such unscheduled or forced outages end. The Network Customer shall notify and coordinate with the Transmission Provider prior to reparalleling the Network Resource, transmission line, or substation.

(c) Maintenance schedules will be posted on an electronic bulletin board or communicated via the data link.

8.0 Load Shedding

(a) The Parties shall implement load shedding programs to maintain the reliability and integrity of the Control Area, as provided in Section 33.6 of the Tariff. Load shedding shall include: (1) automatic load shedding: (2) manual load shedding; or (3) rotating interruption of customer load. The Transmission Provider will order load shedding to maintain the relative sizes of load served, unless otherwise required by circumstances beyond the control of the Transmission Provider or the Network Customer. Automatic load shedding devices will operate without notice. When manual load shedding or rotating interruptions are necessary, the Transmission Provider shall notify the Network Customer's dispatchers or schedulers of the required action and the Network Customer shall comply immediately.

(b) The Network Customer shall, at its own expense, provide, operate, and maintain in service underfrequency load-shedding equipment. The Network Customer's equipment shall be: (1) compatible and coordinated with the Transmission Provider's load shedding equipment; and (2) set for the amount of load to be shed with frequency trips and tripping times as coordinated in the regional reliability council. In the event that Transmission Provider modifies the load-shedding system, the Network Customer shall, at its own expense, make changes to the equipment and setting of such equipment, as required. The Network Customer shall test and inspect the load-shedding equipment within

ninety (90) days of taking Network Integration Transmission Service under the Tariff and at least once each year thereafter, and provide a written report to the Transmission Provider. The Transmission Provider may request a test of the load-shedding equipment with reasonable notice.

9.0 Recognition of Flow of Power and Energy

(a) The Parties recognize that: (1) the Transmission provider's Transmission System is, and will be, directly or indirectly interconnected with transmission systems owned or operated by others; (2) the flow of power and energy between such systems will be controlled by the physical and electrical characteristics of the facilities involved and the manner in which they are operated; and (3) part of the power and energy being delivered under this NOA may flow through such other systems rather than through the facilities of the Transmission Provider. The Network Operating Committee shall, from time to time as necessary, determine methods and take reasonably appropriate action to assure maximum delivery of power and energy at the points of receipt and delivery and at such additional or alternate points of receipt and delivery as may be established by the Parties.

(b) Each Party will at all times cooperate with other interconnected systems in establishing arrangements or mitigation measures to minimize operational impacts on each other's systems.

(c) Each Party recognizes that a Party's proposed new interconnection or modification of an existing interconnection between that Party's system and the system of a third party, may cause adverse anticipated effects on the system of the other Party. The Party making such interconnection or modification shall minimize, or otherwise compensate for, adverse operational effects to the Party's system.

10.0 Service Conditions

The Parties recognize that operating and technical problems may arise in the control of the frequency and in the flow of real and reactive power over the interconnected transmission systems. The Network Operating Committee may adopt operating rules and procedures as necessary to assure that, as completely as practical, the delivery and receipt of real and reactive power and energy hereunder shall be accomplished in a manner that causes the least interference with such interconnected systems.

A Network Customer interconnecting with the Transmission Provider's Transmission System is obligated to follow the same practices and procedures for interconnection and operation that the Transmission Provider uses for its own load and resources.

Where the Network Customer purchases Ancillary Services and/or IOS from third parties, the Network Customer shall have the responsibility to secure contractual arrangements with such third parties that are consistent with the Tariff, this Network Operating Agreement, and any applicable rules and procedures of the Network Operating Committee.

11.0 Data, Information and Reports

(a) The Network Customer shall, upon request, provide the Transmission Provider with such reports and information concerning its network operation as are reasonably necessary to enable the Transmission Provider to operate its Transmission System adequately.

(b) Scheduling: Hourly transactions from outside of the Transmission Provider's Control Area, in whole megawatts, are prescheduled. Hourly transactions and forecasts of generation and load from within the Transmission Provider's Control Area, in megawatts, are prescheduled. Schedules can be changed consistent with the practices in the regional reliability councils.

The Network Customer shall notify the Transmission Provider of intended imports into the Control Area for the next normal business day(s) by voice no later than _____. No later than _____ of each normal business day, the Network Customer shall finalize import preschedules by voice and transmit all the preschedules and forecasts in a format and using a method specified by the Transmission Provider. The Network Customer shall update the preschedules and forecasts before _____. Such preschedules and forecasts shall include, as applicable: (i) each import into or export out of the Control Area; (ii) each power purchase and sale from within the Control Area; (iii) losses; (iv) generation from each Network Resource; (v) Network Load at each point designated in Section 4.0 of the Specifications for Network Integration Transmission Service attached to the Service Agreement; (vi) Regulating Margin; (vii) Spinning and Supplemental Reserve from each Network Resource; (viii) Spinning and Supplemental Reserve purchased from the Transmission Provider or each third party; (ix) the Network Customer's MSSC; (x) available capacity from each Network Resource; (xi) transmission service associated with each preschedule and forecast; (xii) incremental and decremental cost data for Network Resources; and (xiii) other information, as required by the Transmission Provider.

(c) Annual Forecast: By January 10 of each year, the Network Customer shall update its load and resource forecast pursuant to Section 29.2 and 31.6 of the Tariff by providing the Transmission Provider with a non-binding typical weekday and typical weekend forecast in a format specified by the Transmission Provider.

(d) Monthly Forecast; Five (5) days before the end of the month, the Network Customer shall update the forecast for the following month specifying purchases, generation, maximum demand, total monthly energy, and Operating Reserve Service from the Transmission Provider or third party.

(e) The Network Customer shall telemeter to the Transmission Provider information including but not limited to watts, vars, generator status, generator breaker status, generator terminal voltage and high side transformer voltage, unless otherwise agreed.

(f) The Network Customer shall provide generating resource characteristics to the Transmission Provider as necessary to implement redispatch, and constraint and reserve management.

12.0 Metering

(a) The Network Customer shall have the obligation to install and maintain revenue meters and communication equipment compatible with the Transmission Provider's meter reading system. Revenue quality meters shall be installed at the point of interconnection between the Network Customer's facility and the Transmission Provider's system. The meters shall measure and record both real power (watts) and reactive power (vars) flow in both directions. Meters installed at a point other than the point of delivery shall be adjusted for the appropriate line and/or transformer losses.

(b) The Transmission Provider shall read or retrieve meter data on the first work day after the end of each billing cycle or such other data as may be required to carry out the provision of the Tariff. The Transmission Provider shall process the meter data and determine energy imbalances, accounting, and billing using such meter data

(c) The meter owner shall test revenue meters for power deliveries at least once a year and within ten (10) business days after a request by the other Party. The other Party will be afforded the opportunity to be present during the meter test. For meters owned by the Transmission Provider, the Network Customer may request a meter test by calling the Transmission Provider's Network Operating Committee representative and shall pay for the cost of the requested test if the meter has been tested within the previous twelve months. The Parties present at the meter test shall estimate the amount of capacity and energy transferred during the meter test. The meter owner shall immediately repair, adjust, or replace any meter or associated equipment found to be defective or inaccurate. An inaccurate meter is one that exceeds two percent (2%) plus or minus, of the calibrated standards.

(d) The Transmission Provider shall adjust the recorded data to compensate for the effect of an inaccurate meter. Such adjustment shall be made for a maximum period of thirty (30) days prior to the date of the test or to the period during which such inaccuracy may be determined to have existed, whichever period is shorter. No adjustment prior to the beginning of the next preceding month shall be made except by agreement of the Parties. Should any meter fail to register, the Transmission Provider shall estimate, from the best information available, the demand created, energy flow, and var flows during the period of the failure. The Transmission Provider shall, as soon as possible, correct the Network Customer's bills affected by the inaccurate meter. That correction, when made, shall constitute full adjustment of any claim arising out of the inaccurate meter for the period of the correction.

13.0 Communications

(a) The Network Customer shall, at its own expense, install and maintain communication links for scheduling. One communication link may be used for data transfer and the other link shall be used for voice communication.

(b) A Network Customer contributing to Regulating Margin and Operating Reserve requirements or securing the requirements from a third party shall, at its own expense, install and maintain telemetry equipment communicating between the generating resource(s) and the Transmission Provider.

14.0 Notice

Any notice or request made to or by either Party regarding this NOA shall be made to the representative of the other Party as indicated in the Service Agreement.

15.0 Term

The term if this NOA shall be concurrent with the term of the Network Customer's Service Agreement for Network Integration Transmission Service as it may be amended from time to time.

16.0 Entire Agreement

The Tariff and the Service Agreement as they are amended from time to time are incorporated herein and made a part hereof. To the extent that a conflict exists between the terms of this NOA and the terms of the Open Access Transmission Tariff, the tariff shall control.

17.0 Assignment

This NOA shall inure to the benefit of and be binding upon the Parties hereto and their respective successors and assigns, but shall not be assigned by either Party without the written consent of the other, except to a successor to all or substantially all of the electric properties and assets of such Party.

IN WITNESS WHEREOF, the Parties have caused this Network Operating Agreement to be executed by their respective authorized officials.

Transmission Provider:

By: _____ _____ _____
Name Title Date

Network Customer:

By: _____ _____ _____
Name Title Date

ATTACHMENT H

Annual Transmission Revenue Requirement
For Network Integration Transmission Service

Service by Northern States Power Companies:

1) The Annual Transmission Revenue Requirement for purposes of the Network Integration Transmission Service shall be $130,000,000.

Service by Public Service Company of Colorado:

2) The Annual Transmission Revenue Requirement for purposes of the Network Integration Transmission Service shall be calculated using the rate formula set forth in Attachment O of this tariff. The results of the formula calculation shall be posted on the PSCo OASIS by October 1 of each calendar year and shall be effective on January 1 of such year. The Annual Transmission Revenue Requirement will be as identified on Table 2 of the PSCo rate formula, line 6.

FERC Annual Charge Fee recovery: An administrative charge shall be applied to all transmission services in the PSCo zone to recover the cost of the Commission annual charge (Annual Charge) under Part 382 of the Commission's regulations. The Commission issues the invoice for the Annual Charge to PSCo based on its megawatt-hours (MWH) of transmission of electric energy in interstate commerce as reported in FERC Form 582. The charge factor or billing rate for PSCo is calculated by the FERC on its Annual Charge invoice and is identified on Table 2, line 21 of the PSCo formula rate data posted on the PSCo OASIS. Xcel Energy shall file the posted Annual Charge with the Commission, as part of its annual informational filing. The posted Annual Charge billing rate shall then be billed for all MWH of transmission service to the individual Transmission Customer during each formula rate year. No Transmission Customer shall request that the Annual Charge billing rates be placed into effect subject to suspension or refund or that the Commission otherwise condition recovery of such FERC Annual Charge. However, each such Transmission Customer reserves its rights, if any, to challenge, or seek refunds concerning any such FERC Annual Charge to the extent such FERC Annual Charge does not reflect a simple and accurate pass-through of the FERC Annual Charge.

Service by Southwestern Public Service Company

3) The Annual Transmission Revenue Requirement (ATRR) for purposes of the Network Integration Transmission Service shall be calculated using the rate formula set forth in Attachment O - SPS of this tariff. The ATRR will be as identified on page 1 of the SPS rate formula, line 6. The Annual Formula Rate Implementation Procedures applicable to such ATRR and rate formula shall be as set forth in Appendix 1 to Attachment O-SPS.

SPP Administrative Charge recovery: An administrative charge shall be applied to all transmission service in the SPS zone to recover SPS's payment of the Southwest Power Pool (SPP) Administrative Charges (Schedule 1-A to the SPP

regional open access transmission tariff (SPP OATT)) associated with such loads or services. For Network Integration Transmission Service, this charge shall be up to $0.20 per MW per hour for the applicable monthly customer network load for all hours of the applicable month. This will be a direct pass through of the actual SPP Administrative Charge assessed to SPS for grandfathered transmission service loads in the SPS zone.

FERC Annual Charge Recovery: An administrative charge shall be applied to all transmission services in the SPS zone to recover the cost of the Commission annual charge (Annual Charge) under Part 382 of the Commission's regulations. For service in the SPS zone, the Commission issues the invoice for the Annual Charge to Southwest Power Pool (SPP) based on all megawatt-hours (MWH) of transmission of electric energy in interstate commerce as reported by SPP on FERC Form 582. SPP bills SPS each month under Schedule 12 of the SPP OATT for all load in the SPS zone not otherwise directly billed by SPP. The charges to a customer in the SPS zone will be a direct pass through of the charges to SPS under Schedule 12 of the SPP OATT related to the customer's load. The current billing rate for SPS shall be posted on the SPS page of the SPP OASIS. Xcel Energy shall file the posted Annual Charge with the Commission. No Transmission Customer that was an active party to Docket No. ER04-1174-000, et al., shall request that the Annual Charge billing rates be placed into effect subject to suspension or refund or that the Commission otherwise condition its acceptance of such billing rates. However, each such Transmission Customer reserves its rights, if any, to protest, seek conditions on, or seek refunds concerning any such filing to the extent such filing goes beyond a pass-through of the FERC Annual Charge or does not do so accurately.

SPP Base Plan Upgrade Charges Recovery: Transmission costs paid to the SPP by SPS for which the Transmission Customer under the Xcel Energy OATT receives a benefit, such as the payment of Base Plan Upgrade Charges assigned to the Transmission Provider's zone and allocable to the Transmission Customer. Charges related to Base Plan Upgrades, Future Roll-ins, and replacement of Existing Facilities are to be included. Direct Assignment Facilities, Economic Upgrades, Requested Upgrades and generator related Network Upgrades are to be excluded.

Limitations

The amount in (1) shall be effective until amended by the Transmission Provider or modified by the Commission.

For the PSCo System: The Return on Common Equity, depreciation rates or amortization periods; and the Post-Employment Benefits Other Than Pension pursuant to Statement of Financial Accounting Standards No. 106, Employers' Accounting for Post-Employment Benefits Other Than Pension (PBOP) charges provided for in the rate formula referred to in (2) shall not be changed, until such time that these values are changed as directed by the Commission following a filing pursuant to FPA Section 205 or 206. The Return on Common Equity shall not be changed effect prior to July 1, 2012; however, a Transmission Customer taking service on the PSCo Transmission System will have the right to petition the Commission pursuant to Section 206 of the Federal Power Act to lower the Return on Common Equity used in such rate formula at any time on or after July 1, 2012. Recovery of extraordinary property losses and abandoned plant shall be included in rate base and shall be amortized in the rate formula referred to in (2) only after FERC has authorized the amounts and the amortization periods.

For the SPS System: The Return on Common Equity, depreciation rates or amortization periods; and the actual 2009 Post-Employment Benefits Other Than Pension pursuant to Statement of Financial Accounting Standards No. 106, Employers' Accounting for Post-Employment Benefits Other Than Pension (PBOP) charges provided for in the rate formula referred to in (3) shall not be changed, until such time that these values are changed except as directed by the Commission following a filing pursuant to FPA Section 205 or 206. Recovery of extraordinary property losses and abandoned plant shall be included in rate base and shall be amortized in the rate formula referred to in (3) only after FERC has authorized the amounts and the amortization periods.

I Index of Network Transmission Svc Customers Version: 0.0.0 Effective: 7/30/2010

ATTACHMENT I

Index of Network Integration Transmission Service Customers

See Transmission Provider's Electric Quarterly Report at the following Internet Address:

http://www.ferc.gov/docs-filing/eqr/data/spreadsheet.asp

ATTACHMENT J

Procedures for Addressing Parallel Flows

Northern States Power (NSP) Companies and Southwestern Public Service Company (SPS):

NSP and SPS shall implement curtailment of transmission service in accordance with the currently effective North American Electric Reliability Corporation Transmission Loading Relief (TLR) Procedures on file and accepted by the Commission.

Public Service Company of Colorado (PSCo):

PSCo shall implement curtailment of transmission service in accordance with Western Electricity Coordinating Council (WECC) Standard IRO-STD-006-0, Qualified Path Unscheduled Flow Relief, or successor regional standard approved by the Commission.

ATTACHMENT K

Form of System Impact Study Agreement

This Study Agreement, dated as of _____, is made and entered by and between _____ (the Transmission Provider), and _____ (the Applicant).

WHEREAS The Transmission Provider is a utility operating company providing electric service in the state(s) of _____; and

WHEREAS, The Applicant has been determined by the Transmission Provider to be an Eligible Transmission Customer under Part I of the Tariff; and to have a Completed Application for either Firm Point-To-Point Transmission Service under Part II of the Tariff, or Network Integration Transmission Service under Part III of the Tariff; and

WHEREAS, The Applicant has provided to the Transmission Provider an Application deposit in accordance with the provisions of either Section 17.3 or Section 29.2 of the Tariff; and

WHEREAS, The Transmission Provider must determine: (a) the adequacy of the Transmission Provider's transmission system to accommodate the Applicant's request for transmission service; and/or (b) any required network upgrades; and/or (c) the estimated costs of direct assignment facilities, network upgrades or opportunity costs associated with providing the requested service.

NOW THEREFORE, In consideration of the mutual agreements set forth below, the Applicant and the Transmission Provider agree as follows:

1.0 <u>Performance of Study</u>

The Transmission Provider agrees to provide all necessary labor, facilities, transportation and supervision necessary to perform the System Impact Study for the Applicant. The Transmission Provider shall use its sole discretion as to the scope, details and methods used to perform the Study.

The Applicant agrees to compensate the Transmission Provider in accordance with Sections 7.0 and 8.0 of this Study Agreement. The Applicant will provide information as requested by the Transmission Provider.

2.0 <u>Scope of Study</u>

A meeting between the Transmission Provider and the Applicant shall be held as soon as practical after execution of this Agreement to: (a) review the application and any known issue that could affect the scope of the study; and (b) develop a scope of study. The location of the meeting shall be at the Transmission Provider's offices unless another location is mutually agreed to.

The results of this study shall determine whether adequate capacity will be available on the Transmission Provider's transmission system to provide the _____MW___ of transmission service, from _____ to _____ for the

period of _____ through _____ requested by the Applicant. If adequate transmission capacity is not available on the Transmission Provider's transmission system to provide the service requested by the Applicant, the results of this study shall determine what transmission capacity is available, by what amount the transmission capacity available falls short of the Applicant's request and the cause of the transmission capacity limitations and options to alleviate the constraint(s).

Factors to be considered in determining the capacity availability on the Transmission Provider's transmission system will include but not be limited to:

1. Steady state power flow study results;
2. Stability study results;
3. NERC, Regional Reliability Council and the Transmission Provider's system design criteria;
4. Transmission transfer capability of the existing system;
5. Transmission transfer capability of the system after the request is added;
6. Reliability requirements of the Transmission Provider and the Applicant; and
7. Type and term of the Service requested.

3.0 Study Standards

The study procedure will use Good Utility Practice and the engineering and operating principles, standards, guidelines and criteria of the Transmission Provider, the Regional Reliability Council of which the Transmission Provider is a member, any entity of which the Transmission Provider is a member and is approved by the Commission to promulgate or apply regional or national planning and reliability standards (such as a regional transmission group, RTG), NERC or any similar organization that may exist in the future of which the Transmission Provider is then a member.

In all cases, system addition(s) to the electric supply facilities shall maintain or improve the Transmission Provider’s transmission system operation, reliability and transfer capability.

4.0 Schedule for Completion

Upon receipt of an executed Study Agreement, the Transmission Provider will complete the System Impact Study and provide study results to the Applicant within a period not to exceed sixty (60) days from the date of receipt, unless the complexity of the application or the number of applications from others reasonably requires additional time. If additional time is required, the Transmission Provider shall notify the Applicant on a timely basis and provide an estimate of the time needed to reach a final determination.

5.0 Ownership of Results

Reports, summaries, plans and other documents arising out of this Agreement shall become the property of the Transmission Provider. All studies, computer input and output data, planning, operating and other documents, workpapers, assumptions and any other material that forms the basis for determining the constraints shall remain in the files of the Transmission Provider, but copies shall be made available and supplied to the Applicant if requested.

6.0 Nondisclosure of Information

The Applicant shall consider all information provided by the Transmission Provider and all supporting work papers resulting from the Transmission Provider's performance of the services to be proprietary unless such information is available from public sources. The Applicant shall not publish or disclose proprietary information for any purpose without the prior written consent of the Transmission Provider.

7.0 Information Requests

The Transmission Provider may desire additional information regarding the Applicant's proposed transactions on the Transmission Provider's Transmission System. The Applicant shall furnish within ten (10) days, written responses to reasonable requests for information submitted by the Transmission Provider.

8.0 Rates

The Applicant will be charged the current salary or wage rates including overheads for the personnel performing the study. Expenses that are directly chargeable to the study shall be determined by the Transmission Provider. Typical expenses include, but are not limited to:

- Subcontracted services.
- Long distance telephone calls
- Computer operating time at established rate
- Printing and reproduction expense.
- Reasonable travel and living expense.

The estimated charge for performing the System Impact Study is $_____. This estimated charge is based on the Transmission Provider's estimate of the actual cost, and time for the completion of the System Impact Study.

9.0 Payments

The Applicant shall advance 50% of the estimated cost of the study when the Study Agreement is executed. The remaining actual cost to perform the study shall be due at the completion of the study and review of the study with the Applicant. The Transmission Provider will refund any amount paid by the Applicant in excess of actual costs.

10.0 Notices

All notices hereunder shall be in writing and shall be delivered to the parties at the following addresses:

Transmission Provider:

_____
_____
_____
_____

Applicant:

_____
_____
_____
_____

Such notices shall be deemed to have been served when personally delivered or upon receipt as evidenced by a U.S. Postal Service receipt of mail or evidence of delivery by a private express mail service.

11.0 Choice of Law

This Agreement shall be governed by the laws of the State of _____.

12.0 Force Majeure

The Transmission Provider shall not be considered to be in default of the provisions of this Agreement if delays in or failure of performance shall be due to uncontrollable forces, the effect of which, by the exercise of reasonable diligence, the Transmission Provider could not avoid. The term uncontrollable forces shall mean any event which results in the prevention or delay of performance by the Transmission Provider of its obligations under this Agreement and which is beyond the control of the Transmission Provider. The term uncontrollable forces includes, but is not limited to, fire, acts of God, flood, earthquakes, storms, lightning, epidemic, war, riot, civil disturbance, sabotage, inability to procure permits, licenses, or authorizations from any state, local, or federal agency, or person for any of the supplies, materials, accesses, or services required to be provided by the Transmission Provider under this Agreement, strikes, work slowdowns, or other labor disturbances, and judicial constraint. The provisions of this article shall not be interpreted or construed to require the Transmission Provider to prevent, settle, or otherwise avoid a strike, work slowdown, or other labor action. the Transmission Provider shall give timely written notice to the Applicant describing the circumstances of uncontrollable forces which prevent the fulfillment of obligation of this Agreement. The Transmission Provider shall give timely written notice to the Applicant that the uncontrollable forces which prevented the fulfillment of obligations of this Agreement are no longer present and work has resumed on those obligations.

13.0 Indemnity

The Applicant shall at all times indemnify, defend, and save the Transmission Provider harmless from, any and all damages, losses, claims, including claims and actions relating to injury to or death of any person or damage to property, demands, suits, recoveries, costs and expenses, court costs, attorney fees, and all other obligations by or to third parties, arising out of or resulting from the Transmission Provider's performance of its obligations under this agreement on behalf of the Applicant, except in cases of negligence or intentional wrongdoing by the Transmission Provider.

14.0 Severability

No waiver of any breach of this Agreement shall constitute a waiver of any other breach of the same or any other provisions of this Agreement, and no waiver shall be effective unless granted in writing. In the event that any provision herein shall be illegal or unenforceable, such provision shall be severed from the Agreement. The entire agreement shall not fail, but the balance of the Agreement shall continue in full force and effect.

15.0 Entire Agreement

This Agreement supersedes any and all proposals and/or understandings, oral and written, between the parties hereto and constitutes their sole and only Agreement regarding the System Impact Study provided for herein.

IN WITNESS WHEREOF, the parties hereto have caused this Agreement to be executed by their respective authorized officials.

Transmission Provider:

By: _____ _____ _____
Name Title Date

Applicant:

By: _____ _____ _____
Name Title Date

L Form of Facilities Study Agreement Version: 0.0.0 Effective: 7/30/2010

ATTACHMENT L

Form of Facilities Study Agreement

This Study Agreement, dated as of _____, is made and entered by and between _____ (the Transmission Provider), and _____ (the Applicant).

WHEREAS The Transmission Provider is a utility operating company providing electric service in the state(s) of _____; and

WHEREAS, The Applicant has been determined by the Transmission Provider to be an Eligible Transmission Customer under Part I of the Tariff; and to have a Completed Application for either Firm Point-To-Point Transmission Service under Part II of the Tariff, or Network Integration Transmission Service under Part III of the Tariff; and

WHEREAS, The Applicant has provided to the Transmission Provider an Application deposit in accordance with the provisions of either Section 17.3 or Section 29.2 of the Tariff; and

WHEREAS, The Transmission Provider must determine: (a) the adequacy of the Transmission Provider's transmission system to accommodate the Applicant's request for transmission service; and/or (b) any required network upgrades; and/or (c) the estimated costs of direct assignment facilities, network upgrades or opportunity costs associated with providing the requested service.

NOW THEREFORE, In consideration of the mutual agreements set forth below, the Applicant and the Transmission Provider agree as follows:

1.0 <u>Performance of Study</u>

The Transmission Provider agrees to provide all necessary labor, facilities, transportation and supervision necessary to perform the Facility Study for the Applicant to determine necessary additions to the Transmission Provider's transmission system to provide the requested Transmission Service. The Transmission Provider shall use its sole discretion as to the scope, details and methods used to perform the Study.

The Applicant agrees to compensate the Transmission Provider in accordance with Sections 7.0 and 8.0 of this Study Agreement. The Applicant will provide information as requested by the Transmission Provider.

2.0 <u>Scope of Study</u>

A meeting between the Transmission Provider and the Applicant shall be held as soon as practical after execution of this Agreement to: (a) review the application, the System Impact Study, and any known issue that could affect the scope of the study; and (b) develop a scope of study. The location of the meeting shall be at the Transmission Provider's offices unless another location is mutually agreed to.

The results of the study shall be considered preliminary in nature and shall serve as the basis for detailed engineering design of the identified facilities. The study will identify facilities required to deliver the _____ MW of transmission service, from

_____ to _____ for the period of _____ through _____ that the Applicant has requested, the estimated cost to upgrade facilities, and a facilities construction schedule.

The costs to the Applicant and the Transmission Provider shall be based on actual costs as incurred in the design and construction of the identified facilities.

Factors to be considered in determining the facilities to be added to the Transmission Provider's transmission system will include, but not be limited to:

1. System Impact Study results;
2. Load characteristics;
   a. Demand;
   b. Pattern;
   c. Harmonics;
   d. Transients;
   e. Flicker; and
   f. Motor starting needs;
3. Transmission transfer capability of the existing system;
4. Transmission transfer capability on the system after the facilities are added;
5. Reliability of the existing system;
6. Reliability requirements of the Transmission Provider and the Applicant;
7. Power Quality;
8. Cost to the Transmission Provider and the Applicant;
9. Time required to construct the facilities;
10. Type and term of the service requested;
11 The Applicant's requested schedule; and
12. Requirements of any other party whose facilities in the interconnected transmission network are materially affected by the service requested.

3.0 <u>Engineering Standards</u>

The facility design proposed in the study will use the practices, methods and acts engaged in or approved by a significant portion of the electric utility industry during the relevant time period, or any of the practices, methods and acts which, in the exercise of reasonable judgment in the light of the facts known at the time the decision was made, could have been expected to produce the desired result at the lowest reasonable cost consistent with good business practices, reliability, safety and expedience. Good utility practice is not intended to be limited to the optimum practice method or act to the exclusion of all others, but rather to be a range of acceptable practices, methods or acts.

In all cases, system addition(s) to the electric supply facilities shall maintain or improve the Transmission Provider's transmission system operation, reliability and transfer capability.

4.0 <u>Schedule for Completion</u>

Upon receipt of an executed Study Agreement, the Transmission Provider will complete the Facilities Study, provide study results to the Applicant within a period not to exceed sixty (60) days from the date of receipt, unless the complexity of the application or the number of applications from others, reasonably requires additional time. If additional

time is required, the Transmission Provider shall notify the Applicant on a timely basis and provide an estimate of the time needed to reach a final determination.

5.0 Results of Study

A formal report containing results of the Facilities Study will be issued. The following sections will be included as applicable:

1. Summary;
2. General descriptions of the existing and proposed facilities;
3. Transmission sources;
4. Substation configurations;
5. System capabilities;
6. System reliability;
7. Power quality;
8. Costs to the Transmission Provider and the Applicant;
9. Construction schedule; and
10. Summary of permits, licenses and approvals required for construction to commence.

6.0 Ownership of Results

Reports, summaries, plans and other documents arising out of this Agreement shall become the property of the Transmission Provider. All studies, computer input and output data, planning, operating and other documents, workpapers, assumptions, and any other material that forms the basis for determining the constraints shall remain in the files of the Transmission Provider, but copies shall be made available and supplied to the Applicant if requested.

7.0 Nondisclosure of Information

The Applicant shall consider all information provided by the Transmission Provider and all supporting work papers resulting from the Transmission Provider's performance of the services to be proprietary unless such information is available from public sources. The Applicant shall not publish or disclose proprietary information for any purpose without the prior written consent of the Transmission Provider.

8.0 Information Requests

The Transmission Provider may desire additional information regarding the Applicant's proposed transactions on the Transmission Provider's transmission system. The Applicant shall furnish within ten (10) days, written responses to reasonable requests for information submitted by the Transmission Provider.

9.0 Rates

The Applicant will be charged the current salary or wage rates including overheads for the personnel performing the study. Expenses that are directly chargeable to the study shall be determined by the Transmission Provider. Typical expenses include, but are not limited to:

- Subcontracted services.
- Long distance telephone calls
- Computer operating time at established rate
- Printing and reproduction expense.

- Reasonable travel and living expense.

10.0 Payments

The Applicant shall advance 50% of the estimated cost of the study when the Study Agreement is executed. The remaining actual cost to perform the study shall be due at the completion of the study and review of the study with the Applicant. The Transmission Provider will refund any amount paid by the Applicant in excess of actual costs.

11.0 Notices

All notices hereunder shall be in writing and shall be delivered to the parties at the following addresses:

Transmission Provider:

_____
_____
_____
_____

Applicant:

_____
_____
_____
_____

Such notices shall be deemed to have been served when personally delivered or upon receipt as evidenced by a U.S. Postal Service receipt of mail or evidence of delivery by a private express mail service.

12.0 Choice of Law

This Agreement shall be governed by the laws of the State of _____.

13.0 Force Majeure

The Transmission Provider shall not be considered to be in default of the provisions of this Agreement if delays in or failure of performance shall be due to uncontrollable forces, the effect of which, by the exercise of reasonable diligence, the Transmission Provider could not avoid. The term uncontrollable forces shall mean any event which results in the prevention or delay of performance by the Transmission Provider of its obligations under this Agreement and which is beyond the control of the Transmission Provider. The term uncontrollable forces includes, but is not limited to, fire, acts of God, flood, earthquakes, storms, lightning, epidemic, war, riot, civil disturbance, sabotage, inability to procure permits, licenses, or authorizations from any state, local, or federal agency, or person for any of the supplies, materials, accesses, or services required to be provided by the Transmission Provider under this Agreement, strikes, work slowdowns, or other labor disturbances, and judicial constraint. The provisions of this article shall not be interpreted or construed to require the Transmission Provider to prevent, settle, or otherwise avoid a strike, work slowdown, or other labor action. the Transmission Provider shall give timely written notice to the Applicant describing the circumstances of uncontrollable forces which prevent the fulfillment of obligation of this Agreement. The

Transmission Provider shall give timely written notice to the Applicant that the uncontrollable forces which prevented the fulfillment of obligations of this Agreement are no longer present and work has resumed on those obligations.

14.0 Indemnity

The Applicant shall at all times indemnify, defend, and save the Transmission Provider harmless from, any and all damages, losses, claims, including claims and actions relating to injury to or death of any person or damage to property, demands, suits, recoveries, costs and expenses, court costs, attorney fees, and all other obligations by or to third parties, arising out of or resulting from the Transmission Provider's performance of its obligations under this Agreement on behalf of Applicant, except in cases of negligence or intentional wrongdoing by the Transmission Provider.

15.0 Severability

No waiver of any breach of this Agreement shall constitute a waiver of any other breach of the same or any other provisions of this Agreement, and no waiver shall be effective unless granted in writing. In the event that any provision herein shall be illegal or unenforceable, such provision shall be severed from the Agreement. The entire agreement shall not fail, but the balance of the Agreement shall continue in full force and effect.

16.0 Entire Agreement

This Agreement supersedes any and all proposals and/or understandings, oral and written, between the parties hereto and constitutes their sole and only Agreement regarding the Facilities Study provided for herein.

IN WITNESS WHEREOF, the parties hereto have caused this Agreement to be executed by their respective authorized officials.

Transmission Provider:

By: _____ _____ _____
Name Title Date

Applicant:

By: _____ _____ _____
Name Title Date

ATTACHMENT M

Methodology for Allocating Transmission Revenues Among Utility Operating Companies

If more than one Xcel Transmission Provider provides transmission service for a single transaction, the revenues received will be allocated among NSP, PSCo, and SPS as follows:

Schedules 1, 2, 3, 4, 5, and 6 Revenue:

100% to the Transmission Provider that provides delivery of the power to the load or out of the Xcel System.

Schedule 7 or 8 Revenue:

Allocated to the Transmission Providers that provided transmission service in proportion to the respective Transmission Providers' revenue requirements.

ATTACHMENT N

Standard Large Generator Interconnection Procedures (LGIP)

Applicable to Generating Facilities that exceed 20 MWs connecting to the Transmission System

of

Public Service Company of Colorado

Note: For further information regarding a large generation interconnection to the transmission system of any of the Xcel Energy Operating Companies, please consult the currently effective "Interconnection Guidelines For Transmission Interconnected Producer-Owned Generation Greater than 20 MW" available at the Xcel Energy Inc. website at www.xcelenergy.com/docs/corpcomm/TransmissionInterconnectionGuidelines.pdf

TABLE OF CONTENTS

Section 1. Definitions
Section 2. Scope and Application
2.1 Application of Standard Large Generator Interconnection Procedures
2.2 Comparability
2.3 Base Case Data
2.4 No Applicability to Transmission Service
Section 3. Interconnection Requests
3.1 General
3.2 Identification of Types of Interconnection Services
3.2.1 Energy Resource Interconnection Service
3.2.1.1 The Product
3.2.1.2 The Study
3.2.2 Network Resource Interconnection Service
3.2.2.1 The Product
3.2.2.2 The Study
3.3 Valid Interconnection Request
3.3.1 Initiating an Interconnection Request
3.3.2 Acknowledgment of Interconnection Request
3.3.3 Deficiencies in Interconnection Request
3.3.4 Scoping Meeting
3.4 OASIS Posting
3.5 Coordination with Affected Systems
3.6 Withdrawal
Section 4. Queue Position
4.1 General
4.2 Clustering
4.3 Transferability of Queue Position
4.4 Modifications
Section 5. Procedures for Interconnection Requests Submitted Prior to Effective Date of Standard Large Generator Interconnection Procedures
5.1 Queue Position for Pending Requests
5.2 New Transmission Provider
Section 6. Interconnection Feasibility Study
6.1 Interconnection Feasibility Study Agreement
6.2 Scope of Interconnection Feasibility Study
6.3 Interconnection Feasibility Study Procedures
6.4 Re-Study
Section 7. Interconnection System Impact Study
7.1 Interconnection System Impact Study Agreement
7.2 Execution of Interconnection System Impact Study Agreement
7.3 Scope of Interconnection System Impact Study
7.4 Interconnection System Impact Study Procedures
7.5 Meeting with Transmission Provider
7.6 Re-Study
Section 8. Interconnection Facilities Study
8.1 Interconnection Facilities Study Agreement
8.2 Scope of Interconnection Facilities Study
8.3 Interconnection Facilities Study Procedures

8.4 Meeting with Transmission Provider
8.5 Re-Study
Section 9. Engineering & Procurement ('E&P') Agreement
Section 10. Optional Interconnection Study
10.1 Optional Interconnection Study Agreement
10.2 Scope of Optional Interconnection Study
10.3 Optional Interconnection Study Procedures
Section 11. Standard Large Generator Interconnection Agreement (LGIA)
11.1 Tender
11.2 Negotiation
11.3 Execution and Filing
11.4 Commencement of Interconnection Activities
Section 12. Construction of Transmission Provider's Interconnection Facilities and Network Upgrades
12.1 Schedule
12.2 Construction Sequencing
12.2.1 General
12.2.2 Advance Construction of Network Upgrades that are an Obligation of an Entity other than Interconnection Customer
12.2.3 Advancing Construction of Network Upgrades that are Part of an Expansion Plan of the Transmission Provider
12.2.4 Amended Interconnection System Impact Study
Section 13. Miscellaneous
13.1 Confidentiality
13.1.1 Scope
13.1.2 Release of Confidential Information
13.1.3 Rights
13.1.4 No Warranties
13.1.5 Standard of Care
13.1.6 Order of Disclosure
13.1.7 Remedies
13.1.8 Disclosure to FERC or its Staff
13.2 Delegation of Responsibility
13.3 Obligation for Study Costs
13.4 Third Parties Conducting Studies
13.5 Disputes
13.5.1 Submission
13.5.2 External Arbitration Procedures
13.5.3 Arbitration Decisions
13.5.4 Costs
13.6 Local Furnishing Bonds
13.6.1 Transmission Providers That Own Facilities Financed by Local Furnishing Bonds
13.6.2 Alternative Procedures for Requesting Interconnection Service

Appendix 1 – Interconnection Request for a Large Generating Facility

Appendix 2 – Interconnection Feasibility Study Agreement

Appendix 3 – Interconnection System Impact Study Agreement

Appendix 4 – Interconnection Facilities Study Agreement

Appendix 5 – Optional Interconnection Study Agreement

Appendix 6 – Standard Large Generator Interconnection Agreement

Appendix 6.1 – Interconnection Procedures For A Wind Generating Plant

Section 1. Definitions

Adverse System Impact shall mean the negative effects due to technical or operational limits on conductors or equipment being exceeded that may compromise the safety and reliability of the electric system.

Affected System shall mean an electric system other than the Transmission Provider's Transmission System that may be affected by the proposed interconnection.

Affected System Operator shall mean the entity that operates an Affected System.

Affiliate shall mean, with respect to a corporation, partnership or other entity, each such other corporation, partnership or other entity that directly or indirectly, through one or more intermediaries, controls, is controlled by, or is under common control with, such corporation, partnership or other entity.

Ancillary Services shall mean those services that are necessary to support the transmission of capacity and energy from resources to loads while maintaining reliable operation of the Transmission Provider's Transmission System in accordance with Good Utility Practice.

Applicable Laws and Regulations shall mean all duly promulgated applicable federal, state and local laws, regulations, rules, ordinances, codes, decrees, judgments, directives, or judicial or administrative orders, permits and other duly authorized actions of any Governmental Authority.

Applicable Reliability Council shall mean the reliability council applicable to the Transmission System to which the Generating Facility is directly interconnected.

Applicable Reliability Standards shall mean the requirements and guidelines of NERC, the Applicable Reliability Council, and the Control Area of the Transmission System to which the Generating Facility is directly interconnected.

Base Case shall mean the base case power flow, short circuit, and stability data bases used for the Interconnection Studies by the Transmission Provider or Interconnection Customer.

Breach shall mean the failure of a Party to perform or observe any material term or condition of the Standard Large Generator Interconnection Agreement.

Breaching Party shall mean a Party that is in Breach of the Standard Large Generator Interconnection Agreement.

Business Day shall mean Monday through Friday, excluding Federal Holidays.

Calendar Day shall mean any day including Saturday, Sunday or a Federal Holiday.

Clustering shall mean the process whereby a group of Interconnection Requests is studied together, instead of serially, for the purpose of conducting the Interconnection System Impact Study.

Commercial Operation shall mean the status of a Generating Facility that has commenced generating electricity for sale, excluding electricity generated during Trial Operation.

Commercial Operation Date of a unit shall mean the date on which the Generating Facility commences Commercial Operation as agreed to by the Parties pursuant to Appendix E to the Standard Large Generator Interconnection Agreement.

Confidential Information shall mean any confidential, proprietary or trade secret information of a plan, specification, pattern, procedure, design, device, list, concept, policy or compilation relating to the present or planned business of a Party, which is designated as confidential by the Party supplying the information, whether conveyed orally, electronically, in writing, through inspection, or otherwise.

Control Area shall mean an electrical system or systems bounded by interconnection metering and telemetry, capable of controlling generation to maintain its interchange schedule with other Control Areas and contributing to frequency regulation of the interconnection. A Control Area must be certified by an Applicable Reliability Council.

Default shall mean the failure of a Breaching Party to cure its Breach in accordance with Article 17 of the Standard Large Generator Interconnection Agreement.

Dispute Resolution shall mean the procedure for resolution of a dispute between the Parties in which they will first attempt to resolve the dispute on an informal basis.

Distribution System shall mean the Transmission Provider's facilities and equipment used to transmit electricity to ultimate usage points such as homes and industries directly from nearby generators or from interchanges with higher voltage transmission networks which transport bulk power over longer distances. The voltage levels at which distribution systems operate differ among areas.

Distribution Upgrades shall mean the additions, modifications, and upgrades to the Transmission Provider's Distribution System at or beyond the Point of Interconnection to facilitate interconnection of the Generating Facility and render the transmission service necessary to affect Interconnection Customer's wholesale sale of electricity in interstate commerce. Distribution Upgrades do not include Interconnection Facilities.

Effective Date shall mean the date on which the Standard Large Generator Interconnection Agreement becomes effective upon execution by the Parties subject to acceptance by FERC, or if filed unexecuted, upon the date specified by FERC.

Emergency Condition shall mean a condition or situation: (1) that in the judgment of the Party making the claim is imminently likely to endanger life or property; or (2) that, in the case of a Transmission Provider, is imminently likely (as determined in a non-discriminatory manner) to cause a material adverse effect on the security of, or damage to Transmission Provider's Transmission System, Transmission Provider's Interconnection Facilities or the electric systems of others to which the Transmission Provider's Transmission System is directly connected; or (3) that, in the case of Interconnection Customer, is imminently likely (as determined in a non-discriminatory manner) to cause a material adverse effect on the security of, or damage to, the Generating Facility or Interconnection Customer's Interconnection Facilities. System restoration and black start shall be considered Emergency Conditions; provided that Interconnection

Customer is not obligated by the Standard Large Generator Interconnection Agreement to possess black start capability.

Energy Resource Interconnection Service shall mean an Interconnection Service that allows the Interconnection Customer to connect its Generating Facility to the Transmission Provider's Transmission System to be eligible to deliver the Generating Facility's electric output using the existing firm or nonfirm capacity of the Transmission Provider's Transmission System on an as available basis. Energy Resource Interconnection Service in and of itself does not convey transmission service.

Engineering & Procurement (E&P) Agreement shall mean an agreement that authorizes the Transmission Provider to begin engineering and procurement of long lead-time items necessary for the establishment of the interconnection in order to advance the implementation of the Interconnection Request.

Environmental Law shall mean Applicable Laws or Regulations relating to pollution or protection of the environment or natural resources.

Federal Power Act shall mean the Federal Power Act, as amended, 16 U.S.C. §§ 791a et seq.

FERC shall mean the Federal Energy Regulatory Commission (Commission) or its successor.

Force Majeure shall mean any act of God, labor disturbance, act of the public enemy, war, insurrection, riot, fire, storm or flood, explosion, breakage or accident to machinery or equipment, any order, regulation or restriction imposed by governmental, military or lawfully established civilian authorities, or any other cause beyond a Party's control. A Force Majeure event does not include acts of negligence or intentional wrongdoing by the Party claiming Force Majeure.

Generating Facility shall mean Interconnection Customer's device for the production of electricity identified in the Interconnection Request, but shall not include the Interconnection Customer's Interconnection Facilities.

Generating Facility Capacity shall mean the net capacity of the Generating Facility and the aggregate net capacity of the Generating Facility where it includes multiple energy production devices.

Good Utility Practice shall mean any of the practices, methods and acts engaged in or approved by a significant portion of the electric industry during the relevant time period, or any of the practices, methods and acts which, in the exercise of reasonable judgment in light of the facts known at the time the decision was made, could have been expected to accomplish the desired result at a reasonable cost consistent with good business practices, reliability, safety and expedition. Good Utility Practice is not intended to be limited to the optimum practice, method, or act to the exclusion of all others, but rather to be acceptable practices, methods, or acts generally accepted in the region.

Governmental Authority shall mean any federal, state, local or other governmental regulatory or administrative agency, court, commission, department, board, or other governmental subdivision, legislature, rulemaking board, tribunal, or other governmental authority having jurisdiction over the Parties, their respective facilities, or the respective services they provide,

and exercising or entitled to exercise any administrative, executive, police, or taxing authority or power; provided, however, that such term does not include Interconnection Customer, Transmission Provider, or any Affiliate thereof.

Hazardous Substances shall mean any chemicals, materials or substances defined as or included in the definition of "hazardous substances," "hazardous wastes," "hazardous materials," "hazardous constituents," "restricted hazardous materials," "extremely hazardous substances," "toxic substances," "radioactive substances," "contaminants," "pollutants," "toxic pollutants" or words of similar meaning and regulatory effect under any applicable Environmental Law, or any other chemical, material or substance, exposure to which is prohibited, limited or regulated by any applicable Environmental Law.

Initial Synchronization Date shall mean the date upon which the Generating Facility is initially synchronized and upon which Trial Operation begins.

In-Service Date shall mean the date upon which the Interconnection Customer reasonably expects it will be ready to begin use of the Transmission Provider's Interconnection Facilities to obtain back feed power.

Interconnection Customer shall mean any entity, including the Transmission Provider, Transmission Owner or any of the Affiliates or subsidiaries of either, that proposes to interconnect its Generating Facility with the Transmission Provider's Transmission System.

Interconnection Customer's Interconnection Facilities shall mean all facilities and equipment, as identified in Appendix A of the Standard Large Generator Interconnection Agreement, that are located between the Generating Facility and the Point of Change of Ownership, including any modification, addition, or upgrades to such facilities and equipment necessary to physically and electrically interconnect the Generating Facility to the Transmission Provider's Transmission System. Interconnection Customer's Interconnection Facilities are sole use facilities.

Interconnection Facilities shall mean the Transmission Provider's Interconnection Facilities and the Interconnection Customer's Interconnection Facilities. Collectively, Interconnection Facilities include all facilities and equipment between the Generating Facility and the Point of Interconnection, including any modification, additions or upgrades that are necessary to physically and electrically interconnect the Generating Facility to the Transmission Provider's Transmission System. Interconnection Facilities are sole use facilities and shall not include Distribution Upgrades, Stand Alone Network Upgrades or Network Upgrades.

Interconnection Facilities Study shall mean a study conducted by the Transmission Provider or a third party consultant for the Interconnection Customer to determine a list of facilities (including Transmission Provider's Interconnection Facilities and Network Upgrades as identified in the Interconnection System Impact Study), the cost of those facilities, and the time required to interconnect the Generating Facility with the Transmission Provider's Transmission System. The scope of the study is defined in Section 8 of the Standard Large Generator Interconnection Procedures.

Interconnection Facilities Study Agreement shall mean the form of agreement contained in Appendix 4 of the Standard Large Generator Interconnection Procedures for conducting the Interconnection Facilities Study.

Interconnection Feasibility Study shall mean a preliminary evaluation of the system impact and cost of interconnecting the Generating Facility to the Transmission Provider's Transmission System, the scope of which is described in Section 6 of the Standard Large Generator Interconnection Procedures.

Interconnection Feasibility Study Agreement shall mean the form of agreement contained in Appendix 2 of the Standard Large Generator Interconnection Procedures for conducting the Interconnection Feasibility Study.

Interconnection Request shall mean an Interconnection Customer's request, in the form of Appendix 1 to the Standard Large Generator Interconnection Procedures, in accordance with the Tariff, to interconnect a new Generating Facility, or to increase the capacity of, or make a Material Modification to the operating characteristics of, an existing Generating Facility that is interconnected with the Transmission Provider's Transmission System.

Interconnection Service shall mean the service provided by the Transmission Provider associated with interconnecting the Interconnection Customer's Generating Facility to the Transmission Provider's Transmission System and enabling it to receive electric energy and capacity from the Generating Facility at the Point of Interconnection, pursuant to the terms of the Standard Large Generator Interconnection Agreement and, if applicable, the Transmission Provider's Tariff.

Interconnection Study shall mean any of the following studies: the Interconnection Feasibility Study, the Interconnection System Impact Study, and the Interconnection Facilities Study described in the Standard Large Generator Interconnection Procedures.

Interconnection System Impact Study shall mean an engineering study that evaluates the impact of the proposed interconnection on the safety and reliability of Transmission Provider's Transmission System and, if applicable, an Affected System. The study shall identify and detail the system impacts that would result if the Generating Facility were interconnected without project modifications or system modifications, focusing on the Adverse System Impacts identified in the Interconnection Feasibility Study, or to study potential impacts, including but not limited to those identified in the Scoping Meeting as described in the Standard Large Generator Interconnection Procedures.

Interconnection System Impact Study Agreement shall mean the form of agreement contained in Appendix 3 of the Standard Large Generator Interconnection Procedures for conducting the Interconnection System Impact Study.

IRS shall mean the Internal Revenue Service.

Joint Operating Committee shall be a group made up of representatives from Interconnection Customers and the Transmission Provider to coordinate operating and technical considerations of Interconnection Service.

Large Generating Facility shall mean a Generating Facility having a Generating Facility Capacity of more than 20 MW.

Loss shall mean any and all losses relating to injury to or death of any person or damage to property, demand, suits, recoveries, costs and expenses, court costs, attorney fees, and all other obligations by or to third parties, arising out of or resulting from the other Party's performance, or non-performance of its obligations under the Standard Large Generator Interconnection Agreement on behalf of the indemnifying Party, except in cases of gross negligence or intentional wrongdoing by the indemnifying Party.

Material Modification shall mean those modifications that have a material impact on the cost or timing of any Interconnection Request with a later queue priority date.

Metering Equipment shall mean all metering equipment installed or to be installed at the Generating Facility pursuant to the Standard Large Generator Interconnection Agreement at the metering points, including but not limited to instrument transformers, MWh-meters, data acquisition equipment, transducers, remote terminal unit, communications equipment, phone lines, and fiber optics.

NERC shall mean the North American Electric Reliability Council or its successor organization.

Network Resource shall mean any designated generating resource owned, purchased, or leased by a Network Customer under the Network Integration Transmission Service Tariff. Network Resources do not include any resource, or any portion thereof, that is committed for sale to third parties or otherwise cannot be called upon to meet the Network Customer's Network Load on a non-interruptible basis.

Network Resource Interconnection Service shall mean an Interconnection Service that allows the Interconnection Customer to integrate its Large Generating Facility with the Transmission Provider's Transmission System (1) in a manner comparable to that in which the Transmission Provider integrates its generating facilities to serve native load customers; or (2) in an RTO or ISO with market based congestion management, in the same manner as Network Resources. Network Resource Interconnection Service in and of itself does not convey transmission service.

Network Upgrades shall mean the additions, modifications, and upgrades to the Transmission Provider's Transmission System required at or beyond the point at which the Interconnection Facilities connect to the Transmission Provider's Transmission System to accommodate the interconnection of the Large Generating Facility to the Transmission Provider's Transmission System.

Notice of Dispute shall mean a written notice of a dispute or claim that arises out of or in connection with the Standard Large Generator Interconnection Agreement or its performance.

Optional Interconnection Study shall mean a sensitivity analysis based on assumptions specified by the Interconnection Customer in the Optional Interconnection Study Agreement.

Optional Interconnection Study Agreement shall mean the form of agreement contained in Appendix 5 of the Standard Large Generator Interconnection Procedures for conducting the Optional Interconnection Study.

Party or Parties shall mean Transmission Provider, Transmission Owner, Interconnection Customer or any combination of the above.

Point of Change of Ownership shall mean the point, as set forth in Appendix A to the Standard Large Generator Interconnection Agreement, where the Interconnection Customer's Interconnection Facilities connect to the Transmission Provider's Interconnection Facilities.

Point of Interconnection shall mean the point, as set forth in Appendix A to the Standard Large Generator Interconnection Agreement, where the Interconnection Facilities connect to the Transmission Provider's Transmission System.

Queue Position shall mean the order of a valid Interconnection Request, relative to all other pending valid Interconnection Requests, that is established based upon the date and time of receipt of the valid Interconnection Request by the Transmission Provider.

Reasonable Efforts shall mean, with respect to an action required to be attempted or taken by a Party under the Standard Large Generator Interconnection Agreement, efforts that are timely and consistent with Good Utility Practice and are otherwise substantially equivalent to those a Party would use to protect its own interests.

Scoping Meeting shall mean the meeting between representatives of the Interconnection Customer and Transmission Provider conducted for the purpose of discussing alternative interconnection options, to exchange information including any transmission data and earlier study evaluations that would be reasonably expected to impact such interconnection options, to analyze such information, and to determine the potential feasible Points of Interconnection.

Site Control shall mean documentation reasonably demonstrating: (1) ownership of, a leasehold interest in, or a right to develop a site for the purpose of constructing the Generating Facility; (2) an option to purchase or acquire a leasehold site for such purpose; or (3) an exclusivity or other business relationship between Interconnection Customer and the entity having the right to sell, lease or grant Interconnection Customer the right to possess or occupy a site for such purpose.

Small Generating Facility shall mean a Generating Facility that has a Generating Facility Capacity of no more than 20 MW.

Stand Alone Network Upgrades shall mean Network Upgrades that an Interconnection Customer may construct without affecting day-to-day operations of the Transmission System during their construction. Both the Transmission Provider and the Interconnection Customer must agree as to what constitutes Stand Alone Network Upgrades and identify them in Appendix A to the Standard Large Generator Interconnection Agreement.

Standard Large Generator Interconnection Agreement (LGIA) shall mean the form of interconnection agreement applicable to an Interconnection Request pertaining to a Large Generating Facility that is included in the Transmission Provider's Tariff.

Standard Large Generator Interconnection Procedures (LGIP) shall mean the interconnection procedures applicable to an Interconnection Request pertaining to a Large Generating Facility that is included in the Transmission Provider's Tariff.

System Protection Facilities shall mean the equipment, including necessary protection signal communications equipment, required to protect (1) the Transmission Provider's Transmission

System from faults or other electrical disturbances occurring at the Generating Facility and (2) the Generating Facility from faults or other electrical system disturbances occurring on the Transmission Provider's Transmission System or on other delivery systems or other generating systems to which the Transmission Provider's Transmission System is directly connected.

Tariff shall mean the Transmission Provider's Tariff through which open access transmission service and Interconnection Service are offered, as filed with FERC, and as amended or supplemented from time to time, or any successor tariff.

Transmission Owner shall mean an entity that owns, leases or otherwise possesses an interest in the portion of the Transmission System at the Point of Interconnection and may be a Party to the Standard Large Generator Interconnection Agreement to the extent necessary.

Transmission Provider shall mean the public utility (or its designated agent) that owns, controls, or operates transmission or distribution facilities used for the transmission of electricity in interstate commerce and provides transmission service under the Tariff. The term Transmission Provider should be read to include the Transmission Owner when the Transmission Owner is separate from the Transmission Provider.

Transmission Provider's Interconnection Facilities shall mean all facilities and equipment owned, controlled, or operated by the Transmission Provider from the Point of Change of Ownership to the Point of Interconnection as identified in Appendix A to the Standard Large Generator Interconnection Agreement, including any modifications, additions or upgrades to such facilities and equipment. Transmission Provider's Interconnection Facilities are sole use facilities and shall not include Distribution Upgrades, Stand Alone Network Upgrades or Network Upgrades.

Transmission System shall mean the facilities owned, controlled or operated by the Transmission Provider or Transmission Owner that are used to provide transmission service under the Tariff.

Trial Operation shall mean the period during which Interconnection Customer is engaged in on-site test operations and commissioning of the Generating Facility prior to Commercial Operation.

Section 2. Scope and Application

2.1 Application of Standard Large Generator Interconnection Procedures.

Sections 2 through 13 apply to processing an Interconnection Request pertaining to a Large Generating Facility.

2.2 Comparability.

Transmission Provider shall receive, process and analyze all Interconnection Requests in a timely manner as set forth in this LGIP. Transmission Provider will use the same Reasonable Efforts in processing and analyzing Interconnection Requests from all Interconnection Customers, whether the Generating Facilities are owned by Transmission Provider, its subsidiaries or Affiliates or others.

2.3 Base Case Data.

Transmission Provider shall provide base power flow, short circuit and stability databases, including all underlying assumptions, and contingency list upon request subject to confidentiality provisions in LGIP Section 13.1. Transmission Provider is permitted to require that Interconnection Customer sign a confidentiality agreement before the release of commercially sensitive information or Critical Energy Infrastructure Information in the Base Case data. Such databases and lists, hereinafter referred to as Base Cases, shall include all (1) generation projects and (ii) transmission projects, including merchant transmission projects that are proposed for the Transmission System for which a transmission expansion plan has been submitted and approved by the applicable authority.

2.4 No Applicability to Transmission Service.
Nothing in this LGIP shall constitute a request for transmission service or confer upon an Interconnection Customer any right to receive transmission service.

Section 3. Interconnection Requests.

3.1 General.
An Interconnection Customer shall submit to Transmission Provider an Interconnection Request in the form of Appendix 1 to this LGIP and a refundable deposit of $10,000. Transmission Provider shall apply the deposit toward the cost of an Interconnection Feasibility Study. Interconnection Customer shall submit a separate Interconnection Request for each site and may submit multiple Interconnection Requests for a single site. Interconnection Customer must submit a deposit with each Interconnection Request even when more than one request is submitted for a single site. An Interconnection Request to evaluate one site at two different voltage levels shall be treated as two Interconnection Requests.

At Interconnection Customer's option, Transmission Provider and Interconnection Customer will identify alternative Point(s) of Interconnection and configurations at the Scoping Meeting to evaluate in this process and attempt to eliminate alternatives in a reasonable fashion given resources and information available.

Interconnection Customer will select the definitive Point(s) of Interconnection to be studied no later than the execution of the Interconnection Feasibility Study Agreement.

3.2 Identification of Types of Interconnection Services.
At the time the Interconnection Request is submitted, Interconnection Customer must request either Energy Resource Interconnection Service or Network Resource Interconnection Service, as described; provided, however, any Interconnection Customer requesting Network Resource Interconnection Service may also request that it be concurrently studied for Energy Resource Interconnection Service, up to the point when an Interconnection Facility Study Agreement is executed. Interconnection Customer may then elect to proceed with Network Resource Interconnection Service or to proceed under a lower level of interconnection service to the extent that only certain upgrades will be completed.

3.2.1 Energy Resource Interconnection Service.

3.2.1.1 The Product. Energy Resource Interconnection Service allows Interconnection Customer to connect the Large Generating Facility to the Transmission System and be eligible to deliver the Large Generating Facility's output using the existing firm or non-firm capacity of the Transmission System on an "as available" basis. Energy Resource Interconnection Service does not in and of itself convey any right to deliver electricity to any specific customer or Point of Delivery.

3.2.1.2 The Study. The study consists of short circuit/fault duty, steady state (thermal and voltage) and stability analyses. The short circuit/fault duty analysis would identify direct Interconnection Facilities required and the Network Upgrades necessary to address short circuit issues associated with the Interconnection Facilities. The stability and steady state studies would identify necessary upgrades to allow full output of the proposed Large Generating Facility and would also identify the maximum allowed output, at the time the study is performed, of the interconnecting Large Generating Facility without requiring additional Network Upgrades.

3.2.2 Network Resource Interconnection Service.

3.2.2.1 The Product. Transmission Provider must conduct the necessary studies and construct the Network Upgrades needed to integrate the Large Generating Facility (1) in a manner comparable to that in which Transmission Provider integrates its generating facilities to serve native load customers; or (2) in an ISO or RTO with market based congestion management, in the same manner as Network Resources. Network Resource Interconnection Service Allows Interconnection Customer 's Large Generating Facility to be designated as a Network Resource, up to the Large Generating Facility's full output, on the same basis as existing Network Resources interconnected to Transmission Provider's Transmission System, and to be studied as a Network Resource on the assumption that such a designation will occur.

3.2.2.2 The Study. The Interconnection Study for Network Resource Interconnection Service shall assure that Interconnection Customer's Large Generating Facility meets the requirements for Network Resource Interconnection Service and as a general matter, that such Large Generating Facility's interconnection is also studied

with Transmission Provider's Transmission System at peak load, under a variety of severely stressed conditions, to determine whether, with the Large Generating Facility at full output, the aggregate of generation in the local area can be delivered to the aggregate of load on Transmission Provider's Transmission System, consistent with Transmission Provider's reliability criteria and procedures. This approach assumes that some portion of existing Network Resources is displaced by the output of Interconnection Customer's Large Generating Facility. Network Resource Interconnection Service in and of itself does not convey any right to deliver electricity to any specific customer or Point of Delivery. The Transmission Provider may also study the Transmission System under non-peak load conditions. However, upon request by the Interconnection Customer, the Transmission Provider must explain in writing to the Interconnection Customer why the study of non-peak load conditions is required for reliability purposes.

3.3 Valid Interconnection Request.

3.3.1 Initiating an Interconnection Request.

To initiate an Interconnection Request, Interconnection Customer must submit all of the following: (i) a $10,000 deposit, (ii) a completed application in the form of Appendix 1, and (iii) demonstration of Site Control or a posting of an additional deposit of $10,000. Such deposits shall be applied toward any Interconnection Studies pursuant to the Interconnection Request. If Interconnection Customer demonstrates Site Control within the cure period specified in Section 3.3.3 after submitting its Interconnection Request, the additional deposit shall be refundable; otherwise, all such deposit(s), additional and initial, become non-refundable.

The expected In-Service Date of the new Large Generating Facility or increase in capacity of the existing Generating Facility shall be no more than the process window for the regional expansion planning period (or in the absence of a regional planning process, the process window for Transmission Provider's expansion planning period) not to exceed seven years from the date the Interconnection Request is received by Transmission Provider, unless Interconnection Customer demonstrates that engineering, permitting and construction of the new Large Generating Facility or increase in capacity of the existing Generating Facility will take longer than the regional expansion planning period. The In-Service Date may succeed the date the Interconnection Request is received by Transmission Provider by a period up to ten years, or longer where Interconnection Customer and Transmission Provider agree, such agreement not to be unreasonably withheld.

3.3.2 Acknowledgment of Interconnection Request.
Transmission Provider shall acknowledge receipt of the Interconnection Request within five (5) Business Days of receipt of the request and attach a copy of the received Interconnection Request to the acknowledgement.

3.3.3 Deficiencies in Interconnection Request.
An Interconnection Request will not be considered to be a valid request until all items in Section 3.3.1 have been received by Transmission Provider. If an Interconnection Request fails to meet the requirements set forth in Section 3.3.1, Transmission Provider shall notify Interconnection Customer within five (5) Business Days of receipt of the initial Interconnection Request of the reasons for such failure and that the Interconnection Request does not constitute a valid request. Interconnection Customer shall provide Transmission Provider the additional requested information needed to constitute a valid request within ten (10) Business Days after receipt of such notice. Failure by Interconnection Customer to comply with this Section 3.3.3 shall be treated in accordance with Section 3.6.

3.3.4 Scoping Meeting.
Within ten (10) Business Days after receipt of a valid Interconnection Request, Transmission Provider shall establish a date agreeable to Interconnection Customer for the Scoping Meeting, and such date shall be no later than thirty (30) Calendar Days from receipt of the valid Interconnection Request, unless otherwise mutually agreed upon by the Parties.

The purpose of the Scoping Meeting shall be to discuss alternative interconnection options, to exchange information including any transmission data that would reasonably be expected to impact such interconnection options, to analyze such information and to determine the potential feasible Points of Interconnection. Transmission Provider and Interconnection Customer will bring to the meeting such technical data, including, but not limited to: (i) general facility loadings, (ii) general instability issues, (iii) general short circuit issues, (iv) general voltage issues, and (v) general reliability issues as may be reasonably required to accomplish the purpose of the meeting. Transmission Provider and Interconnection Customer will also bring to the meeting personnel and other resources as may be reasonably required to accomplish the purpose of the meeting in the time allocated for the meeting. On the basis of the meeting, Interconnection Customer shall designate its Point of Interconnection, pursuant to Section 6.1, and one or more available alternative Point(s) of Interconnection. The duration of the meeting shall be sufficient to accomplish its purpose.

3.4 OASIS Posting.
Transmission Provider will maintain on its OASIS a list of all Interconnection Requests. The list will identify, for each Interconnection Request: (i) the

maximum summer and winter megawatt electrical output; (ii) the location by county and state; (iii) the station or transmission line or lines where the interconnection will be made; (iv) the projected In-Service Date; (v) the status of the Interconnection Request, including Queue Position; (vi) the type of Interconnection Service being requested; and (vii) the availability of any studies related to the Interconnection Request; (viii) the date of the Interconnection Request; (ix) the type of Generating Facility to be constructed (combined cycle, base load or combustion turbine and fuel type); and (x) for Interconnection Requests that have not resulted in a completed interconnection, an explanation as to why it was not completed. Except in the case of an affiliate, the list will not disclose the identity of Interconnection Customer until Interconnection Customer executes an LGIA or requests that Transmission Provider file an unexecuted LGIA with FERC. Before holding a Scoping Meeting with its Affiliate, Transmission Provider shall post on OASIS an advance notice of its intent to do so. Transmission Provider shall post to its OASIS site any deviations from the study timelines set forth herein. Interconnection Study reports and Optional Interconnection Study reports shall be posted to Transmission Provider's OASIS site subsequent to the meeting between Interconnection Customer and Transmission Provider to discuss the applicable study results. Transmission Provider shall also post any known deviations in the Large Generating Facility's In-Service Date.

3.5 Coordination with Affected Systems.

Transmission Provider will coordinate the conduct of any studies required to determine the impact of the Interconnection Request on Affected Systems with Affected System Operators and, if possible, include those results (if available) in its applicable Interconnection Study within the time frame specified in this LGIP. Transmission Provider will include such Affected System Operators in all meetings held with Interconnection Customer as required by this LGIP. Interconnection Customer will cooperate with Transmission Provider in all matters related to the conduct of studies and the determination of modifications to Affected Systems. A Transmission Provider which may be an Affected System shall cooperate with Transmission Provider with whom interconnection has been requested in all matters related to the conduct of studies and the determination of modifications to Affected Systems.

3.6 Withdrawal.

Interconnection Customer may withdraw its Interconnection Request at any time by written notice of such withdrawal to Transmission Provider. In addition, if Interconnection Customer fails to adhere to all requirements of this LGIP, except as provided in Section 13.5 (Disputes), Transmission Provider shall deem the Interconnection Request to be withdrawn and shall provide written notice to Interconnection Customer of the deemed withdrawal and an explanation of the reasons for such deemed withdrawal. Upon receipt of such written notice, Interconnection Customer shall have fifteen (15) Business Days in which to either respond with information or actions that cure the deficiency or to notify Transmission Provider of its intent to pursue Dispute Resolution.

Withdrawal shall result in the loss of Interconnection Customer's Queue Position. If an Interconnection Customer disputes the withdrawal and loss of its Queue

Position, then during Dispute Resolution, Interconnection Customer's Interconnection Request is eliminated from the queue until such time that the outcome of Dispute Resolution would restore its Queue Position. An Interconnection Customer that withdraws or is deemed to have withdrawn its Interconnection Request shall pay to Transmission Provider all costs that Transmission Provider prudently incurs with respect to that Interconnection Request prior to Transmission Provider's receipt of notice described above. Interconnection Customer must pay all monies due to Transmission Provider before it is allowed to obtain any Interconnection Study data or results.

Transmission Provider shall (i) update the OASIS Queue Position posting and (ii) refund to Interconnection Customer any portion of Interconnection Customer's deposit or study payments that exceeds the costs that Transmission Provider has incurred, including interest calculated in accordance with section 35.19a(a)(2) of FERC's regulations. In the event of such withdrawal, Transmission Provider, subject to the confidentiality provisions of Section 13.1, shall provide, at Interconnection Customer's request, all information that Transmission Provider developed for any completed study conducted up to the date of withdrawal of the Interconnection Request.

Section 4. Queue Position.

4.1 General.

Transmission Provider shall assign a Queue Position based upon the date and time of receipt of the valid Interconnection Request; provided that, if the sole reason an Interconnection Request is not valid is the lack of required information on the application form, and Interconnection Customer provides such information in accordance with Section 3.3.3, then Transmission Provider shall assign Interconnection Customer a Queue Position based on the date the application form was originally filed. Moving a Point of Interconnection shall result in a lowering of Queue Position if it is deemed a Material Modification under Section 4.4.3.

The Queue Position of each Interconnection Request will be used to determine the order of performing the Interconnection Studies and determination of cost responsibility for the facilities necessary to accommodate the Interconnection Request. A higher queued Interconnection Request is one that has been placed "earlier" in the queue in relation to another Interconnection Request that is lower queued.

Transmission Provider may allocate the cost of the common upgrades for clustered Interconnection Requests without regard to Queue Position.

4.2 Clustering.

4.2.1 At Transmission Provider's option, Interconnection Requests may be studied serially or in clusters for the purpose of the Interconnection System Impact Study.

Clustering shall be implemented on the basis of Queue Position. If Transmission Provider elects to study Interconnection Requests using Clustering, all Interconnection Requests received within a period not to exceed one hundred and eighty (180) Calendar Days, hereinafter referred to as the "Queue Cluster Window" shall be studied together without regard to the nature of the underlying Interconnection Service, whether Energy Resource Interconnection Service or Network Resource Interconnection Service. The deadline for completing all Interconnection System Impact Studies for which an Interconnection System Impact Study Agreement has been executed during a Queue Cluster Window shall be in accordance with Section 7.4, for all Interconnection Requests assigned to the same Queue Cluster Window. Transmission Provider may study an Interconnection Request separately to the extent warranted by Good Utility Practice based upon the electrical remoteness of the proposed Large Generating Facility.

Clustering Interconnection System Impact Studies shall be conducted in such a manner to ensure the efficient implementation of the applicable regional transmission expansion plan in light of the Transmission System's capabilities at the time of each study.

The Queue Cluster Window shall have a fixed time interval based on fixed annual opening and closing dates. Any changes to the established Queue Cluster Window interval and opening or closing dates shall be announced with a posting on Transmission Provider's OASIS beginning at least one hundred and eighty (180) Calendar Days in advance of the change and continuing thereafter through the end date of the first Queue Cluster Window that is to be modified.

4.2.2 If multiple Interconnection Requests are filed by an eligible entity as the authorized representative for those Interconnection Customer(s) proposing either a Large or Small Generating Facility to meet some portion of the eligible entity's request for additional generating resources in a Resource Solicitation Process, Transmission Provider may cluster combinations of such Interconnection Requests for purposes of conducting the Interconnection Feasibility Study(ies) and Interconnection System Impact Study(ies) of such Large Generating Facilities. Such studies in connection with a Resource Solicitation Process shall be implemented based upon Queue Position and shall consider the eligible entity's identified need in the Resource Solicitation Process.

An Interconnection Customer may submit to the authorized representative for inclusion in the Resource Solicitation Process an Interconnection Request for a Generating Facility that already has a Queue Position pursuant to Section 4.1. An Interconnection Customer that initially reserves a Queue Position for a Generating Facility through the Resource Solicitation Process may reserve a Queue Position separate from the Resource Solicitation Process

pursuant to Section 4.1. In either case, the Interconnection Customer must meet all requirements associated with maintaining each Queue Position for the Generating Facility.

A Generating Facility in the Resource Solicitation Process is subject to study according to the Queue Position in the process. A Generating Facility that is not a part of the Resource Solicitation Process is subject to study according to its Queue Position pursuant to Section 4.1. All studies must be done in accordance with the provisions of the LGIP, and may not be delayed as a result of the Resource Solicitation Process.

In order to facilitate Transmission Provider's study of Interconnection Requests made in connection with a Resource Solicitation Process, the eligible entity must: a) act as the authorized representative for all Interconnection Requests submitted, b) submit all Interconnection Requests arising from the Resource Solicitation Process at the same time to ensure simultaneous Queue Positions for all such Interconnection Requests, c) cooperate with Transmission Provider in conducting the studies, and d) request that studies be conducted of a reasonable number of different combinations of such Interconnection Requests to meet the eligible entity's identified need in the Resource Solicitation Process.

After Transmission Provider completes the Interconnection System Impact Studies of the requested combinations, the results will be provided to the eligible entity for use in the Resource Solicitation Process. The results will be posted on Transmission Provider’s OASIS consistent with the posting of other study results. After receipt of these studies, the eligible entity must select one of the studied combinations prior to the start of any Interconnection Facility Study associated with the Resource Solicitation Process. Prior to the completion of the Interconnection Facilities Study of all of the components of the selected combination, the eligible entity may replace components, subject to any necessary Re-Study pursuant to Sections 6.4, 7.6 or 8.5. While conducting the Interconnection Facilities Study(ies), Transmission Provider may suspend further action on the Interconnection Requests in the Resource Solicitation Process that are not included in the selected combination. Once a Generating Facility is rejected in the Resource Solicitation Process, it shall lose the Queue Position it held as part of the Resource Solicitation Process. If a Generating Facility is selected by the eligible entity at the conclusion of the Resource Solicitation Process, the Generating Facility may no longer maintain more than one Queue Position.

For purposes of this section 4.2.2, “eligible entity” means any entity subject to or conducting a Resource Solicitation Process, and "Resource Solicitation Process" means any process authorized or required by Applicable Laws and Regulations for the acquisition of

Network Resources by an entity interconnected to the Transmission System of Transmission Provider.

4.3 Transferability of Queue Position.
An Interconnection Customer may transfer its Queue Position to another entity only if such entity acquires the specific Generating Facility identified in the Interconnection Request and the Point of Interconnection does not change.

4.4 Modifications.
Interconnection Customer shall submit to Transmission Provider, in writing, modifications to any information provided in the Interconnection Request. Interconnection Customer shall retain its Queue Position if the modifications are in accordance with Sections 4.4.1, 4.4.2 or 4.4.5, or are determined not to be Material Modifications pursuant to Section 4.4.3.

Notwithstanding the above, during the course of the Interconnection Studies, either Interconnection Customer or Transmission Provider may identify changes to the planned interconnection that may improve the costs and benefits (including reliability) of the interconnection, and the ability of the proposed change to accommodate the Interconnection Request. To the extent the identified changes are acceptable to Transmission Provider and Interconnection Customer, such acceptance not to be unreasonably withheld, Transmission Provider shall modify the Point of Interconnection and/or configuration in accordance with such changes and proceed with any re-studies necessary to do so in accordance with Section 6.4, Section 7.6 and Section 8.5 as applicable and Interconnection Customer shall retain its Queue Position.

4.4.1 Prior to the return of the executed Interconnection System Impact Study Agreement to Transmission Provider, modifications permitted under this Section shall include specifically: (a) a decrease of up to 60 percent of electrical output (MW) of the proposed project; (b) modifying the technical parameters associated with the Large Generating Facility technology or the Large Generating Facility step-up transformer impedance characteristics; and (c) modifying the interconnection configuration. For plant increases, the incremental increase in plant output will go to the end of the queue for the purposes of cost allocation and study analysis.

4.4.2 Prior to the return of the executed Interconnection Facility Study Agreement to Transmission Provider, the modifications permitted under this Section shall include specifically: (a) additional 15 percent decrease of electrical output (MW), and (b) Large Generating Facility technical parameters associated with modifications to Large Generating Facility technology and transformer impedances; provided, however, the incremental costs associated with those modifications are the responsibility of the requesting Interconnection Customer.

4.4.3 Prior to making any modification other than those specifically permitted by Sections 4.4.1, 4.4.2, and 4.4.5, Interconnection

Customer may first request that Transmission Provider evaluate whether such modification is a Material Modification. In response to Interconnection Customer's request, Transmission Provider shall evaluate the proposed modifications prior to making them and inform Interconnection Customer in writing of whether the modifications would constitute a Material Modification. Any change to the Point of Interconnection, except those deemed acceptable under Sections 4.4.1, 6.1, 7.2 or so allowed elsewhere, shall constitute a Material Modification. Interconnection Customer may then withdraw the proposed modification or proceed with a new Interconnection Request for such modification.

4.4.4 Upon receipt of Interconnection Customer's request for modification permitted under this Section 4.4, Transmission Provider shall commence and perform any necessary additional studies as soon as practicable, but in no event shall Transmission Provider commence such studies later than thirty (30) Calendar Days after receiving notice of Interconnection Customer's request. Any additional studies resulting from such modification shall be done at Interconnection Customer's cost.

4.4.5 Extensions of less than three (3) cumulative years in the Commercial Operation Date of the Large Generating Facility to which the Interconnection Request relates are not material and should be handled through construction sequencing.

Section 5. Procedures for Interconnection Requests Submitted Prior to Effective Date of Standard Large Generator Interconnection Procedures

5.1 Queue Position for Pending Requests.

5.1.1 Any Interconnection Customer assigned a Queue Position prior to the effective date of this LGIP shall retain that Queue Position.

5.1.1.1 If an Interconnection Study Agreement has not been executed as of the effective date of this LGIP, then such Interconnection Study, and any subsequent Interconnection Studies, shall be processed in accordance with this LGIP.

5.1.1.2 If an Interconnection Study Agreement has been executed prior to the effective date of this LGIP, such Interconnection Study shall be completed in accordance with the terms of such agreement. With respect to any remaining studies for which an Interconnection Customer has not signed an Interconnection Study Agreement prior to the effective date of the LGIP, Transmission Provider must offer Interconnection Customer the option of either continuing under Transmission Provider's existing interconnection study process or going forward with the

completion of the necessary Interconnection Studies (for which it does not have a signed Interconnection Studies Agreement) in accordance with this LGIP.

5.1.1.3 If an LGIA has been submitted to FERC for approval before the effective date of the LGIP, then the LGIA would be grandfathered.

5.1.2 Transition Period.
To the extent necessary, Transmission Provider and Interconnection Customers with an outstanding request (i.e., an Interconnection Request for which an LGIA has not been submitted to FERC for approval as of the effective date of this LGIP) shall transition to this LGIP within a reasonable period of time not to exceed sixty (60) Calendar Days. The use of the term "outstanding request" herein shall mean any Interconnection Request, on the effective date of this LGIP: (i) that has been submitted but not yet accepted by Transmission Provider; (ii) where the related interconnection agreement has not yet been submitted to FERC for approval in executed or unexecuted form, (iii) where the relevant Interconnection Study Agreements have not yet been executed, or (iv) where any of the relevant Interconnection Studies are in process but not yet completed. Any Interconnection Customer with an outstanding request as of the effective date of this LGIP may request a reasonable extension of any deadline, otherwise applicable, if necessary to avoid undue hardship or prejudice to its Interconnection Request. A reasonable extension shall be granted by Transmission Provider to the extent consistent with the intent and process provided for under this LGIP.

5.2 New Transmission Provider.
If Transmission Provider transfers control of its Transmission System to a successor Transmission Provider during the period when an Interconnection Request is pending, the original Transmission Provider shall transfer to the successor Transmission Provider any amount of the deposit or payment with interest thereon that exceeds the cost that it incurred to evaluate the request for interconnection. Any difference between such net amount and the deposit or payment required by this LGIP shall be paid by or refunded to the Interconnection Customer, as appropriate. The original Transmission Provider shall coordinate with the successor Transmission Provider to complete any Interconnection Study, as appropriate, that the original Transmission Provider has begun but has not completed.

If Transmission Provider has tendered a draft LGIA to Interconnection Customer but Interconnection Customer has not either executed the LGIA or requested the filing of an unexecuted LGIA with FERC, unless otherwise provided, Interconnection Customer must complete negotiations with the successor Transmission Provider.

Section 6. Interconnection Feasibility Study

6.1 Interconnection Feasibility Study Agreement.

Simultaneously with the acknowledgement of a valid Interconnection Request Transmission Provider shall provide to Interconnection Customer an Interconnection Feasibility Study Agreement in the form of Appendix 2. The Interconnection Feasibility Study Agreement shall specify that Interconnection Customer is responsible for the actual cost of the Interconnection Feasibility Study. Within five (5) Business Days following the Scoping Meeting Interconnection Customer shall specify for inclusion in the attachment to the Interconnection Feasibility Study Agreement the Point(s) of Interconnection and any reasonable alternative Point(s) of Interconnection. Within five (5) Business Days following Transmission Provider's receipt of such designation, Transmission Provider shall tender to Interconnection Customer the Interconnection Feasibility Study Agreement signed by Transmission Provider, which includes a good faith estimate of the cost for completing the Interconnection Feasibility Study. Interconnection Customer shall execute and deliver to Transmission Provider the Interconnection Feasibility Study Agreement along with a $10,000 deposit no later than thirty (30) Calendar Days after its receipt.

On or before the return of the executed Interconnection Feasibility Study Agreement to Transmission Provider, Interconnection Customer shall provide the technical data called for in Appendix 1, Attachment A.

If the Interconnection Feasibility Study uncovers any unexpected result(s) not contemplated during the Scoping Meeting, a substitute Point of Interconnection identified by either Interconnection Customer or Transmission Provider, and acceptable to the other, such acceptance not to be unreasonably withheld, will be substituted for the designated Point of Interconnection specified above without loss of Queue Position, and Re-studies shall be completed pursuant to Section 6.4 as applicable. For the purpose of this Section 6.1, if Transmission Provider and Interconnection

Customer cannot agree on the substituted Point of Interconnection, then Interconnection Customer may direct that one of the alternatives as specified in the Interconnection Feasibility Study Agreement, as specified pursuant to Section 3.3.4, shall be the substitute.

If Interconnection Customer and Transmission Provider agree to forgo the Interconnection Feasibility Study, Transmission Provider will initiate an Interconnection System Impact Study under Section 7 of this LGIP and apply the $10,000 deposit towards the Interconnection System Impact Study.

6.2 Scope of Interconnection Feasibility Study.

The Interconnection Feasibility Study shall preliminarily evaluate the feasibility of the proposed interconnection to the Transmission System.

The Interconnection Feasibility Study will consider the Base Case as well as all generating facilities (and with respect to (iii), any identified Network Upgrades) that, on the date the Interconnection Feasibility Study is commenced: (i) are

directly interconnected to the Transmission System; (ii) are interconnected to Affected Systems and may have an impact on the Interconnection Request; (iii) have a pending higher queued Interconnection Request to interconnect to the Transmission System; and (iv) have no Queue Position but have executed an LGIA or requested that an unexecuted LGIA be filed with FERC. The Interconnection Feasibility Study will consist of a power flow and short circuit analysis. The Interconnection Feasibility Study will provide a list of facilities and a non-binding good faith estimate of cost responsibility and a non-binding good faith estimated time to construct.

6.3 Interconnection Feasibility Study Procedures.
Transmission Provider shall utilize existing studies to the extent practicable when it performs the study. Transmission Provider shall use Reasonable Efforts to complete the Interconnection Feasibility Study no later than forty-five (45) Calendar Days after Transmission Provider receives the fully executed Interconnection Feasibility Study Agreement. At the request of Interconnection Customer or at any time Transmission Provider determines that it will not meet the required time frame for completing the Interconnection Feasibility Study, Transmission Provider shall notify Interconnection Customer as to the schedule status of the Interconnection Feasibility Study. If Transmission Provider is unable to complete the Interconnection Feasibility Study within that time period, it shall notify Interconnection Customer and provide an estimated completion date with an explanation of the reasons why additional time is required. Upon request, Transmission Provider shall provide Interconnection Customer supporting documentation, workpapers and relevant power flow, short circuit and stability databases for the Interconnection Feasibility Study, subject to confidentiality arrangements consistent with Section 13.1.

6.3.1 Meeting with Transmission Provider.
Within ten (10) Business Days of providing an Interconnection Feasibility Study report to Interconnection Customer, Transmission Provider and Interconnection Customer shall meet to discuss the results of the Interconnection Feasibility Study.

6.4 Re-Study.
If Re-Study of the Interconnection Feasibility Study is required due to a higher queued project dropping out of the queue or a modification of a higher queued project subject to Section 4.4, or re-designation of the Point of Interconnection pursuant to Section 6.1 Transmission Provider shall notify Interconnection Customer in writing. Such Re-Study shall take not longer than forty-five (45) Calendar Days from the date of the notice. Any cost of Re-Study shall be borne by the Interconnection Customer being re-studied.

Section 7. Interconnection System Impact Study

7.1 Interconnection System Impact Study Agreement.
Unless otherwise agreed, pursuant to the Scoping Meeting provided in Section 3.3.4, simultaneously with the delivery of the Interconnection Feasibility Study to Interconnection Customer, Transmission Provider shall provide to Interconnection Customer an Interconnection System Impact Study Agreement in

the form of Appendix 3 to this LGIP. The Interconnection System Impact Study Agreement shall provide that Interconnection Customer shall compensate Transmission Provider for the actual cost of the Interconnection System Impact Study. Within three (3) Business Days following the Interconnection Feasibility Study results meeting, Transmission Provider shall provide to Interconnection Customer a non-binding good faith estimate of the cost and timeframe for completing the Interconnection System Impact Study.

7.2 Execution of Interconnection System Impact Study Agreement.
Interconnection Customer shall execute the Interconnection System Impact Study Agreement and deliver the executed Interconnection System Impact Study Agreement to Transmission Provider no later than thirty (30) Calendar Days after its receipt along with demonstration of Site Control, and a $50,000 deposit.

If Interconnection Customer does not provide all such technical data when it delivers the Interconnection System Impact Study Agreement, Transmission Provider shall notify Interconnection Customer of the deficiency within five (5) Business Days of the receipt of the executed Interconnection System Impact Study Agreement and Interconnection Customer shall cure the deficiency within ten (10) Business Days of receipt of the notice, provided, however, such deficiency does not include failure to deliver the executed Interconnection System Impact Study Agreement or deposit.

If the Interconnection System Impact Study uncovers any unexpected result(s) not contemplated during the Scoping Meeting and the Interconnection Feasibility Study, a substitute Point of Interconnection identified by either Interconnection Customer or Transmission Provider, and acceptable to the other, such acceptance not to be unreasonably withheld, will be substituted for the designated Point of Interconnection specified above without loss of Queue Position, and restudies shall be completed pursuant to Section 7.6 as applicable. For the purpose of this Section 7.2, if Transmission Provider and Interconnection Customer cannot agree on the substituted Point of Interconnection, then Interconnection Customer may direct that one of the alternatives as specified in the Interconnection Feasibility Study Agreement, as specified pursuant to Section 3.3.4, shall be the substitute.

7.3 Scope of Interconnection System Impact Study.
The Interconnection System Impact Study shall evaluate the impact of the proposed interconnection on the reliability of the Transmission System. The Interconnection System Impact Study will consider the Base Case as well as all generating facilities (and with respect to (iii) below, any identified Network Upgrades associated with such higher queued interconnection) that, on the date the Interconnection System Impact Study is commenced: (i) are directly interconnected to the Transmission System; (ii) are interconnected to Affected Systems and may have an impact on the Interconnection Request; (iii) have a pending higher queued Interconnection Request to interconnect to the Transmission System; and (iv) have no Queue Position but have executed an LGIA or requested that an unexecuted LGIA be filed with FERC.

The Interconnection System Impact Study will consist of a short circuit analysis, a stability analysis, and a power flow analysis. The Interconnection System Impact Study will state the assumptions upon which it is based; state the results of the analyses; and provide the requirements or potential impediments to providing the requested interconnection service, including a preliminary indication of the cost and length of time that would be necessary to correct any problems identified in those analyses and implement the interconnection. The Interconnection System Impact Study will provide a list of facilities that are required as a result of the Interconnection Request and a non-binding good faith estimate of cost responsibility and a non-binding good faith estimated time to construct.

7.4 Interconnection System Impact Study Procedures

Transmission Provider shall coordinate the Interconnection System Impact Study with any Affected System that is affected by the Interconnection Request pursuant to Section 3.5 above. Transmission Provider shall utilize existing studies to the extent practicable when it performs the study. Transmission Provider shall use Reasonable Efforts to complete the Interconnection System Impact Study within ninety (90) Calendar Days after the receipt of the Interconnection System Impact Study Agreement or notification to proceed, study payment, and technical data. If Transmission Provider uses Clustering, Transmission Provider shall use Reasonable Efforts to deliver a completed Interconnection System Impact Study within ninety (90) Calendar Days after the close of the Queue Cluster Window.

At the request of Interconnection Customer or at any time Transmission Provider determines that it will not meet the required time frame for completing the Interconnection System Impact Study, Transmission Provider shall notify Interconnection Customer as to the schedule status of the Interconnection System Impact Study. If Transmission Provider is unable to complete the Interconnection System Impact Study within the time period, it shall notify Interconnection Customer and provide an estimated completion date with an explanation of the reasons why additional time is required. Upon request, Transmission Provider shall provide Interconnection Customer all supporting documentation, work papers and relevant pre-Interconnection Request and post-Interconnection Request power flow, short circuit and stability databases for the Interconnection System Impact Study, subject to confidentiality arrangements consistent with Section 13.1.

7.5 Meeting with Transmission Provider.

Within ten (10) Business Days of providing an Interconnection System Impact Study report to Interconnection Customer, Transmission Provider and Interconnection Customer shall meet to discuss the results of the Interconnection System Impact Study.

7.6 Re-Study.

If Re-Study of the Interconnection System Impact Study is required due to a higher queued project dropping out of the queue, or a modification of a higher queued project subject to Section 4.4, or re-designation of the Point of Interconnection pursuant to Section 7.2 Transmission Provider shall notify Interconnection Customer in writing. Such Re-Study shall take no longer than

sixty (60) Calendar Days from the date of notice. Any cost of Re-Study shall be borne by the Interconnection Customer being re-studied.

Section 8. Interconnection Facilities Study

8.1 Interconnection Facilities Study Agreement.

Simultaneously with the delivery of the Interconnection System Impact Study to Interconnection Customer, Transmission Provider shall provide to Interconnection Customer an Interconnection Facilities Study Agreement in the form of Appendix 4 to this LGIP. The Interconnection Facilities Study Agreement shall provide that Interconnection Customer shall compensate Transmission Provider for the actual cost of the Interconnection Facilities Study. Within three (3) Business Days following the Interconnection System Impact Study results meeting, Transmission Provider shall provide to Interconnection Customer a non-binding good faith estimate of the cost and timeframe for completing the Interconnection Facilities Study. Interconnection Customer shall execute the Interconnection Facilities Study Agreement and deliver the executed Interconnection Facilities Study Agreement to Transmission Provider within thirty (30) Calendar Days after its receipt, together with the required technical data and the greater of $100,000 or Interconnection Customer's portion of the estimated monthly cost of conducting the Interconnection Facilities Study.

8.1.1 Transmission Provider shall invoice Interconnection Customer on a monthly basis for the work to be conducted on the Interconnection Facilities Study each month. Interconnection Customer shall pay invoiced amounts within thirty (30) Calendar Days of receipt of invoice. Transmission Provider shall continue to hold the amounts on deposit until settlement of the final invoice.

8.2 Scope of Interconnection Facilities Study.

The Interconnection Facilities Study shall specify and estimate the cost of the equipment, engineering, procurement and construction work needed to implement the conclusions of the Interconnection System Impact Study in accordance with Good Utility Practice to physically and electrically connect the Interconnection Facility to the Transmission System. The Interconnection Facilities Study shall also identify the electrical switching configuration of the connection equipment, including, without limitation: the transformer, switchgear, meters, and other station equipment; the nature and estimated cost of any Transmission Provider's Interconnection Facilities and Network Upgrades necessary to accomplish the interconnection; and an estimate of the time required to complete the construction and installation of such facilities.

8.3 Interconnection Facilities Study Procedures.

Transmission Provider shall coordinate the Interconnection Facilities Study with any Affected System pursuant to Section 3.5 above. Transmission Provider shall utilize existing studies to the extent practicable in performing the Interconnection Facilities Study. Transmission Provider shall use Reasonable Efforts to complete the study and issue a draft Interconnection Facilities Study report to Interconnection Customer within the following number of days after receipt of an executed Interconnection Facilities Study Agreement: ninety (90) Calendar Days,

with no more than a +/- 20 percent cost estimate contained in the report; or one hundred eighty (180) Calendar Days, if Interconnection Customer requests a +/- 10 percent cost estimate.

At the request of Interconnection Customer or at any time Transmission Provider determines that it will not meet the required time frame for completing the Interconnection Facilities Study, Transmission Provider shall notify Interconnection Customer as to the schedule status of the Interconnection Facilities Study. If Transmission Provider is unable to complete the Interconnection Facilities Study and issue a draft Interconnection Facilities Study report within the time required, it shall notify Interconnection Customer and provide an estimated completion date and an explanation of the reasons why additional time is required.

Interconnection Customer may, within thirty (30) Calendar Days after receipt of the draft report, provide written comments to Transmission Provider, which Transmission Provider shall include in the final report. Transmission Provider shall issue the final Interconnection Facilities Study report within fifteen (15) Business Days of receiving Interconnection Customer's comments or promptly upon receiving Interconnection Customer's statement that it will not provide comments. Transmission Provider may reasonably extend such fifteen-day period upon notice to Interconnection Customer if Interconnection Customer's comments require Transmission Provider to perform additional analyses or make other significant modifications prior to the issuance of the final Interconnection Facilities Report. Upon request, Transmission Provider shall provide Interconnection Customer supporting documentation, workpapers, and databases or data developed in the preparation of the Interconnection Facilities Study, subject to confidentiality arrangements consistent with Section 13.1.

8.4 Meeting with Transmission Provider.
Within ten (10) Business Days of providing a draft Interconnection Facilities Study report to Interconnection Customer, Transmission Provider and Interconnection Customer shall meet to discuss the results of the Interconnection Facilities Study.

8.5 Re-Study.
If Re-Study of the Interconnection Facilities Study is required due to a higher queued project dropping out of the queue or a modification of a higher queued project pursuant to Section 4.4, Transmission Provider shall so notify Interconnection Customer in writing. Such Re-Study shall take no longer than sixty (60) Calendar Days from the date of notice. Any cost of Re-Study shall be borne by the Interconnection Customer being re-studied.

Section 9. Engineering & Procurement ('E&P') Agreement.

Prior to executing an LGIA, an Interconnection Customer may, in order to advance the implementation of its interconnection, request and Transmission Provider shall offer the Interconnection Customer, an E&P Agreement that authorizes Transmission Provider to begin engineering and procurement of long lead-time items necessary for the establishment of the interconnection.

However, Transmission Provider shall not be obligated to offer an E&P Agreement if Interconnection Customer is in Dispute Resolution as a result of an allegation that Interconnection Customer has failed to meet any milestones or comply with any prerequisites specified in other parts of the LGIP. The E&P Agreement is an optional procedure and it will not alter the Interconnection Customer's Queue Position or In-Service Date. The E&P Agreement shall provide for Interconnection Customer to pay the cost of all activities authorized by Interconnection Customer and to make advance payments or provide other satisfactory security for such costs.

Interconnection Customer shall pay the cost of such authorized activities and any cancellation costs for equipment that is already ordered for its interconnection, which cannot be mitigated as hereafter described, whether or not such items or equipment later become unnecessary. If Interconnection Customer withdraws its application for interconnection or either Party terminates the E&P Agreement, to the extent the equipment ordered can be canceled under reasonable terms, Interconnection Customer shall be obligated to pay the associated cancellation costs. To the extent that the equipment cannot be reasonably canceled, Transmission Provider may elect: (i) to take title to the equipment, in which event Transmission Provider shall refund Interconnection Customer any amounts paid by Interconnection Customer for such equipment and shall pay the cost of delivery of such equipment, or (ii) to transfer title to and deliver such equipment to Interconnection Customer, in which event Interconnection Customer shall pay any unpaid balance and cost of delivery of such equipment.

Section 10. Optional Interconnection Study

10.1 Optional Interconnection Study Agreement.

On or after the date when Interconnection Customer receives Interconnection System Impact Study results, Interconnection Customer may request, and Transmission Provider shall perform a reasonable number of Optional Studies. The request shall describe the assumptions that Interconnection Customer wishes Transmission Provider to study within the scope described in Section 10.2. Within five (5) Business Days after receipt of a request for an Optional Interconnection Study, Transmission Provider shall provide to Interconnection Customer an Optional Interconnection Study Agreement in the form of Appendix 5.

The Optional Interconnection Study Agreement shall: (i) specify the technical data that Interconnection Customer must provide for each phase of the Optional Interconnection Study, (ii) specify Interconnection Customer's assumptions as to which Interconnection Requests with earlier queue priority dates will be excluded from the Optional Interconnection Study case and assumptions as to the type of interconnection service for Interconnection Requests remaining in the Optional Interconnection Study case, and (iii) Transmission Provider's estimate of the cost of the Optional Interconnection Study. To the extent known by Transmission Provider, such estimate shall include any costs expected to be incurred by any Affected System whose participation is necessary to complete the Optional Interconnection Study. Notwithstanding the above, Transmission Provider shall not be required as a result of an Optional Interconnection Study request to

conduct any additional Interconnection Studies with respect to any other Interconnection Request.

Interconnection Customer shall execute the Optional Interconnection Study Agreement within ten (10) Business Days of receipt and deliver the Optional Interconnection Study Agreement, the technical data and a $10,000 deposit to Transmission Provider.

10.2 Scope of Optional Interconnection Study.
The Optional Interconnection Study will consist of a sensitivity analysis based on the assumptions specified by Interconnection Customer in the Optional Interconnection Study Agreement. The Optional Interconnection Study will also identify Transmission Provider's Interconnection Facilities and the Network Upgrades, and the estimated cost thereof, that may be required to provide transmission service or Interconnection Service based upon the results of the Optional Interconnection Study. The Optional Interconnection Study shall be performed solely for informational purposes. Transmission Provider shall use Reasonable Efforts to coordinate the study with any Affected Systems that may be affected by the types of Interconnection Services that are being studied. Transmission Provider shall utilize existing studies to the extent practicable in conducting the Optional Interconnection Study.

10.3 Optional Interconnection Study Procedures.
The executed Optional Interconnection Study Agreement, the prepayment, and technical and other data called for therein must be provided to Transmission Provider within ten (10) Business Days of Interconnection Customer receipt of the Optional Interconnection Study Agreement. Transmission Provider shall use Reasonable Efforts to complete the Optional Interconnection Study within a mutually agreed upon time period specified within the Optional Interconnection Study Agreement. If Transmission Provider is unable to complete the Optional Interconnection Study within such time period, it shall notify Interconnection Customer and provide an estimated completion date and an explanation of the reasons why additional time is required. Any difference between the study payment and the actual cost of the study shall be paid to Transmission Provider or refunded to Interconnection Customer, as appropriate. Upon request, Transmission Provider shall provide Interconnection Customer supporting documentation and work papers and databases or data developed in the preparation of the Optional Interconnection Study, subject to confidentiality arrangements consistent with Section 13.1.

Section 11. Standard Large Generator Interconnection Agreement (LGIA)

11.1 Tender.
Interconnection Customer shall tender comments on the draft Interconnection Facilities Study Report within thirty (30) Calendar Days of receipt of the report. Within thirty (30) Calendar Days after the comments are submitted, Transmission Provider shall tender a draft LGIA, together with draft appendices. The draft LGIA shall be in the form of Transmission Provider's FERC-approved standard form LGIA, which is in Appendix 6. Interconnection Customer shall execute and return the completed draft appendices within thirty (30) Calendar Days.

11.2 Negotiation.

Notwithstanding Section 11.1, at the request of Interconnection Customer Transmission Provider shall begin negotiations with Interconnection Customer concerning the appendices to the LGIA at any time after Interconnection Customer executes the Interconnection Facilities Study Agreement. Transmission Provider and Interconnection Customer shall negotiate concerning any disputed provisions of the appendices to the draft LGIA for not more than sixty (60) Calendar Days after tender of the final Interconnection Facilities Study Report. If Interconnection Customer determines that negotiations are at an impasse, it may request termination of the negotiations at any time after tender of the draft LGIA pursuant to Section 11.1 and request submission of the unexecuted LGIA with FERC or initiate Dispute Resolution procedures pursuant to Section 13.5. If Interconnection Customer requests termination of the negotiations, but within sixty (60) Calendar Days thereafter fails to request either the filing of the unexecuted LGIA or initiate Dispute Resolution, it shall be deemed to have withdrawn its Interconnection Request. Unless otherwise agreed by the Parties, if Interconnection Customer has not executed the LGIA, requested filing of an unexecuted LGIA, or initiated Dispute Resolution procedures pursuant to Section 13.5 within sixty (60) Calendar Days of tender of draft LGIA, it shall be deemed to have withdrawn its Interconnection Request. Transmission Provider shall provide to Interconnection Customer a final LGIA within fifteen (15) Business Days after the completion of the negotiation process.

11.3 Execution and Filing.

Within fifteen (15) Business Days after receipt of the final LGIA, Interconnection Customer shall provide Transmission Provider (A) reasonable evidence that continued Site Control or (B) posting of $250,000, non-refundable additional security, which shall be applied toward future construction costs. At the same time, Interconnection Customer also shall provide reasonable evidence that one or more of the following milestones in the development of the Large Generating Facility, at Interconnection Customer election, has been achieved: (i) the execution of a contract for the supply or transportation of fuel to the Large Generating Facility; (ii) the execution of a contract for the supply of cooling water to the Large Generating Facility; (iii) execution of a contract for the engineering for, procurement of major equipment for, or construction of, the Large Generating Facility; (iv) execution of a contract for the sale of electric energy or capacity from the Large Generating Facility; or (v) application for an air, water, or land use permit.

Interconnection Customer shall either: (i) execute two originals of the tendered LGIA and return them to Transmission Provider; or (ii) request in writing that Transmission Provider file with FERC an LGIA in unexecuted form. As soon as practicable, but not later than ten (10) Business Days after receiving either the two executed originals of the tendered LGIA (if it does not conform with a FERC-approved standard form of interconnection agreement) or the request to file an unexecuted LGIA, Transmission Provider shall file the LGIA with FERC, together with its explanation of any matters as to which Interconnection Customer and Transmission Provider disagree and support for the costs that Transmission Provider proposes to charge to Interconnection Customer under the LGIA. An

unexecuted LGIA should contain terms and conditions deemed appropriate by Transmission Provider for the Interconnection Request. If the Parties agree to proceed with design, procurement, and construction of facilities and upgrades under the agreed-upon terms of the unexecuted LGIA, they may proceed pending FERC action.

11.4 Commencement of Interconnection Activities.
If Interconnection Customer executes the final LGIA, Transmission Provider and Interconnection Customer shall perform their respective obligations in accordance with the terms of the LGIA, subject to modification by FERC. Upon submission of an unexecuted LGIA, Interconnection Customer and Transmission Provider shall promptly comply with the unexecuted LGIA, subject to modification by FERC.

Section 12. Construction of Transmission Provider's Interconnection Facilities and Network Upgrades

12.1 Schedule.
Transmission Provider and Interconnection Customer shall negotiate in good faith concerning a schedule for the construction of Transmission Provider's Interconnection Facilities and the Network Upgrades.

12.2 Construction Sequencing.

12.2.1 General.
In general, the In-Service Date of an Interconnection Customers seeking interconnection to the Transmission System will determine the sequence of construction of Network Upgrades.

12.2.2 Advance Construction of Network Upgrades that are an Obligation of an Entity other than Interconnection Customer.
An Interconnection Customer with an LGIA, in order to maintain its In-Service Date, may request that Transmission Provider advance to the extent necessary the completion of Network Upgrades that: (i) were assumed in the Interconnection Studies for such Interconnection Customer, (ii) are necessary to support such In-Service Date, and (iii) would otherwise not be completed, pursuant to a contractual obligation of an entity other than Interconnection Customer that is seeking interconnection to the Transmission System, in time to support such In-Service Date. Upon such request, Transmission Provider will use Reasonable Efforts to advance the construction of such Network Upgrades to accommodate such request; provided that Interconnection Customer commits to pay Transmission Provider: (i) any associated expediting costs and (ii) the cost of such Network Upgrades.

Transmission Provider will refund to Interconnection Customer both the expediting costs and the cost of Network Upgrades, in accordance with Article 11.4 of the LGIA. Consequently, the entity with a contractual obligation to construct such Network Upgrades shall be

obligated to pay only that portion of the costs of the Network Upgrades that Transmission Provider has not refunded to Interconnection Customer. Payment by that entity shall be due on the date that it would have been due had there been no request for advance construction. Transmission Provider shall forward to Interconnection Customer the amount paid by the entity with a contractual obligation to construct the Network Upgrades as payment in full for the outstanding balance owed to Interconnection Customer. Transmission Provider then shall refund to that entity the amount that it paid for the Network Upgrades, in accordance with Article 11.4 of the LGIA.

12.2.3 Advancing Construction of Network Upgrades that are Part of an Expansion Plan of the Transmission Provider.
An Interconnection Customer with an LGIA, in order to maintain its In-Service Date, may request that Transmission Provider advance to the extent necessary the completion of Network Upgrades that: (i) are necessary to support such In-Service Date and (ii) would otherwise not be completed, pursuant to an expansion plan of Transmission Provider, in time to support such In-Service Date. Upon such request, Transmission Provider will use Reasonable Efforts to advance the construction of such Network Upgrades to accommodate such request; provided that Interconnection Customer commits to pay Transmission Provider any associated expediting costs. Interconnection Customer shall be entitled to transmission credits, if any, for any expediting costs paid.

12.2.4 Amended Interconnection System Impact Study.
An Interconnection System Impact Study will be amended to determine the facilities necessary to support the requested In-Service Date. This amended study will include those transmission and Large Generating Facilities that are expected to be in service on or before the requested In-Service Date.

Section 13. Miscellaneous

13.1 Confidentiality.
Confidential Information shall include, without limitation, all information relating to a Party's technology, research and development, business affairs, and pricing, and any information supplied by either of the Parties to the other prior to the execution of an LGIA.

Information is Confidential Information only if it is clearly designated or marked in writing as confidential on the face of the document, or, if the information is conveyed orally or by inspection, if the Party providing the information orally informs the Party receiving the information that the information is confidential.

If requested by either Party, the other Party shall provide in writing, the basis for asserting that the information referred to in this Article warrants confidential treatment, and the requesting Party may disclose such writing to the appropriate

Governmental Authority. Each Party shall be responsible for the costs associated with affording confidential treatment to its information.

13.1.1 Scope.

Confidential Information shall not include information that the receiving Party can demonstrate: (1) is generally available to the public other than as a result of a disclosure by the receiving Party; (2) was in the lawful possession of the receiving Party on a non-confidential basis before receiving it from the disclosing Party; (3) was supplied to the receiving Party without restriction by a third party, who, to the knowledge of the receiving Party after due inquiry, was under no obligation to the disclosing Party to keep such information confidential; (4) was independently developed by the receiving Party without reference to Confidential Information of the disclosing Party; (5) is, or becomes, publicly known, through no wrongful act or omission of the receiving Party or Breach of the LGIA; or (6) is required, in accordance with Section 13.1.6, Order of Disclosure, to be disclosed by any Governmental Authority or is otherwise required to be disclosed by law or subpoena, or is necessary in any legal proceeding establishing rights and obligations under the

LGIA. Information designated as Confidential Information will no longer be deemed confidential if the Party that designated the information as confidential notifies the other Party that it no longer is confidential.

13.1.2 Release of Confidential Information.

Neither Party shall release or disclose Confidential Information to any other person, except to its Affiliates (limited by the Standards of Conduct requirements), employees, consultants, or to parties who may be or considering providing financing to or equity participation with Interconnection Customer, or to potential purchasers or assignees of Interconnection Customer, on a need-to-know basis in connection with these procedures, unless such person has first been advised of the confidentiality provisions of this Section 13.1 and has agreed to comply with such provisions. Notwithstanding the foregoing, a Party providing Confidential Information to any person shall remain primarily responsible for any release of Confidential Information in contravention of this Section 13.1.

13.1.3 Rights.

Each Party retains all rights, title, and interest in the Confidential Information that each Party discloses to the other Party. The disclosure by each Party to the other Party of Confidential Information shall not be deemed a waiver by either Party or any other person or entity of the right to protect the Confidential Information from public disclosure.

13.1.4 No Warranties.

By providing Confidential Information, neither Party makes any warranties or representations as to its accuracy or completeness. In addition, by supplying Confidential Information, neither Party obligates itself to provide any particular information or Confidential Information to the other Party nor to enter into any further agreements or proceed with any other relationship or joint venture.

13.1.5 Standard of Care.

Each Party shall use at least the same standard of care to protect Confidential Information it receives as it uses to protect its own Confidential Information from unauthorized disclosure, publication or dissemination. Each Party may use Confidential Information solely to fulfill its obligations to the other Party under these procedures or its regulatory requirements.

13.1.6 Order of Disclosure.

If a court or a Government Authority or entity with the right, power, and apparent authority to do so requests or requires either Party, by subpoena, oral deposition, interrogatories, requests for production of documents, administrative order, or otherwise, to disclose Confidential Information, that Party shall provide the other Party with prompt notice of such request(s) or requirement(s) so that the other Party may seek an appropriate protective order or waive compliance with the terms of the LGIA. Notwithstanding the absence of a protective order or waiver, the Party may disclose such Confidential Information which, in the opinion of its counsel, the Party is legally compelled to disclose. Each Party will use Reasonable Efforts to obtain reliable assurance that confidential treatment will be accorded any Confidential Information so furnished.

13.1.7 Remedies.

The Parties agree that monetary damages would be inadequate to compensate a Party for the other Party's Breach of its obligations under this Section 13.1. Each Party accordingly agrees that the other Party shall be entitled to equitable relief, by way of injunction or otherwise, if the first Party Breaches or threatens to Breach its obligations under this Section 13.1, which equitable relief shall be granted without bond or proof of damages, and the receiving Party shall not plead in defense that there would be an adequate remedy at law. Such remedy shall not be deemed an exclusive remedy for the Breach of this Section 13.1, but shall be in addition to all other remedies available at law or in equity. The Parties further acknowledge and agree that the covenants contained herein are necessary for the protection of legitimate business interests and are reasonable in scope. No Party, however, shall be liable for indirect, incidental, or consequential or punitive damages of any nature or kind resulting from or arising in connection with this Section 13.1.

13.1.8 Disclosure to FERC, its Staff, or a State.

Notwithstanding anything in this Section 13.1 to the contrary, and pursuant to 18 CFR section 1b.20, if FERC or its staff, during the course of an investigation or otherwise, requests information from one of the Parties that is otherwise required to be maintained in confidence pursuant to the LGIP, the Party shall provide the requested information to FERC or its staff, within the time provided for in the request for information. In providing the information to FERC or its staff, the Party must, consistent with 18 CFR section 388.112, request that the information be treated as confidential and non-public by FERC and its staff and that the information be withheld from public disclosure. Parties are prohibited from notifying the other Party prior to the release of the Confidential Information to FERC or its staff. The Party shall notify the other Party to the LGIA when its is notified by FERC or its staff that a request to release Confidential Information has been received by FERC, at which time either of the Parties may respond before such information would be made public, pursuant to 18 CFR section 388.112. Requests from a state regulatory body conducting a confidential investigation shall be treated in a similar manner, consistent with applicable state rules and regulations.

13.1.9 Subject to the exception in Section 13.1.8, any information that a Party claims is competitively sensitive, commercial or financial information ("Confidential Information") shall not be disclosed by the other Party to any person not employed or retained by the other Party, except to the extent disclosure is (i) required by law; (ii) reasonably deemed by the disclosing Party to be required to be disclosed in connection with a dispute between or among the Parties, or the defense of litigation or dispute; (iii) otherwise permitted by consent of the other Party, such consent not to be unreasonably withheld; or (iv) necessary to fulfill its obligations under this LGIP or as a transmission service provider or a Control Area operator including disclosing the Confidential Information to an RTO or ISO or to a sub regional, regional or national reliability organization or planning group. The Party asserting confidentiality shall notify the other Party in writing of the information it claims is confidential. Prior to any disclosures of the other Party's Confidential Information under this subparagraph, or if any third party or Governmental Authority makes any request or demand for any of the information described in this subparagraph, the disclosing Party agrees to promptly notify the other Party in writing and agrees to assert confidentiality and cooperate with the other Party in seeking to protect the Confidential Information from public disclosure by confidentiality agreement, protective order or other reasonable measures.

13.1.10 This provision shall not apply to any information that was or is hereafter in the public domain (except as a result of a Breach of this provision).

13.1.11 Transmission Provider shall, at Interconnection Customer's election, destroy, in a confidential manner, or return the Confidential

Information provided at the time of Confidential Information is no longer needed.

13.2 Delegation of Responsibility.
Transmission Provider may use the services of subcontractors as it deems appropriate to perform its obligations under this LGIP. Transmission Provider shall remain primarily liable to Interconnection Customer for the performance of such subcontractors and compliance with its obligations of this LGIP. The subcontractor shall keep all information provided confidential and shall use such information solely for the performance of such obligation for which it was provided and no other purpose.

13.3 Obligation for Study Costs.
Transmission Provider shall charge and Interconnection Customer shall pay the actual costs of the Interconnection Studies. Any difference between the study deposit and the actual cost of the applicable Interconnection Study shall be paid by or refunded, except as otherwise provided herein, to Interconnection Customer or offset against the cost of any future Interconnection Studies associated with the applicable Interconnection Request prior to beginning of any such future Interconnection Studies. Any invoices for Interconnection Studies shall include a detailed and itemized accounting of the cost of each Interconnection Study. Interconnection Customer shall pay any such undisputed costs within thirty (30) Calendar Days of receipt of an invoice therefor. Transmission Provider shall not be obligated to perform or continue to perform any studies unless Interconnection Customer has paid all undisputed amounts in compliance herewith.

13.4 Third Parties Conducting Studies.
If (i) at the time of the signing of an Interconnection Study Agreement there is disagreement as to the estimated time to complete an Interconnection Study, (ii) Interconnection Customer receives notice pursuant to Sections 6.3, 7.4 or 8.3 that Transmission Provider will not complete an Interconnection Study within the applicable timeframe for such Interconnection Study, or (iii) Interconnection Customer receives neither the Interconnection Study nor a notice under Sections 6.3, 7.4 or 8.3 within the applicable timeframe for such Interconnection Study, then Interconnection Customer may require Transmission Provider to utilize a third party consultant reasonably acceptable to Interconnection Customer and Transmission Provider to perform such Interconnection Study under the direction of Transmission Provider. At other times, Transmission Provider may also utilize a third party consultant to perform such Interconnection Study, either in response to a general request of Interconnection Customer, or on its own volition.

In all cases, use of a third party consultant shall be in accord with Article 26 of the LGIA (Subcontractors) and limited to situations where Transmission Provider determines that doing so will help maintain or accelerate the study process for Interconnection Customer's pending Interconnection Request and not interfere with Transmission Provider's progress on Interconnection Studies for other pending Interconnection Requests. In cases where Interconnection Customer requests use of a third party consultant to perform such Interconnection Study, Interconnection Customer and Transmission Provider shall negotiate all of the

pertinent terms and conditions, including reimbursement arrangements and the estimated study completion date and study review deadline. Transmission Provider shall convey all work papers, data bases, study results and all other supporting documentation prepared to date with respect to the Interconnection Request as soon as soon as practicable upon Interconnection Customer's request subject to the confidentiality provision in Section 13.1. In any case, such third party contract may be entered into with either Interconnection Customer or Transmission Provider at Transmission Provider's discretion. In the case of (iii) Interconnection Customer maintains its right to submit a claim to Dispute Resolution to recover the costs of such third party study. Such third party consultant shall be required to comply with this LGIP, Article 26 of the LGIA (Subcontractors), and the relevant Tariff procedures and protocols as would apply if Transmission Provider were to conduct the Interconnection Study and shall use the information provided to it solely for purposes of performing such services and for no other purposes. Transmission Provider shall cooperate with such third party consultant and Interconnection Customer to complete and issue the Interconnection Study in the shortest reasonable time.

13.5 Disputes.

13.5.1 Submission.

In the event either Party has a dispute, or asserts a claim, that arises out of or in connection with the LGIA, the LGIP, or their performance, such Party (the "disputing Party") shall provide the other Party with written notice of the dispute or claim ("Notice of Dispute"). Such dispute or claim shall be referred to a designated senior representative of each Party for resolution on an informal basis as promptly as practicable after receipt of the Notice of Dispute by the other Party. In the event the designated representatives are unable to resolve the claim or dispute through unassisted or assisted negotiations within thirty (30) Calendar Days of the other Party's receipt of the Notice of Dispute, such claim or dispute may, upon mutual agreement of the Parties, be submitted to arbitration and resolved in accordance with the arbitration procedures set forth below. In the event the Parties do not agree to submit such claim or dispute to arbitration, each Party may exercise whatever rights and remedies it may have in equity or at law consistent with the terms of this LGIA.

13.5.2 External Arbitration Procedures.

Any arbitration initiated under these procedures shall be conducted before a single neutral arbitrator appointed by the Parties. If the Parties fail to agree upon a single arbitrator within ten (10) Calendar Days of the submission of the dispute to arbitration, each Party shall choose one arbitrator who shall sit on a three-member arbitration panel. The two arbitrators so chosen shall within twenty (20) Calendar Days select a third arbitrator to chair the arbitration panel. In either case, the arbitrators shall be knowledgeable in electric utility matters, including electric transmission and bulk power issues, and shall not have any current or past substantial business or financial relationships with any party to the arbitration (except prior arbitration).

The arbitrator(s) shall provide each of the Parties an opportunity to be heard and, except as otherwise provided herein, shall conduct the arbitration in accordance with the Commercial Arbitration Rules of the American Arbitration Association ("Arbitration Rules") and any applicable FERC regulations or RTO rules; provided, however, in the event of a conflict between the Arbitration Rules and the terms of this Section 13, the terms of this Section 13 shall prevail.

13.5.3 Arbitration Decisions.

Unless otherwise agreed by the Parties, the arbitrator(s) shall render a decision within ninety (90) Calendar Days of appointment and shall notify the Parties in writing of such decision and the reasons therefor. The arbitrator(s) shall be authorized only to interpret and apply the provisions of the LGIA and LGIP and shall have no power to modify or change any provision of the LGIA and LGIP in any manner. The decision of the arbitrator(s) shall be final and binding upon the Parties, and judgment on the award may be entered in any court having jurisdiction. The decision of the arbitrator(s) may be appealed solely on the grounds that the conduct of the arbitrator(s), or the decision itself, violated the standards set forth in the Federal Arbitration Act or the Administrative Dispute Resolution Act. The final decision of the arbitrator must also be filed with FERC if it affects jurisdictional rates, terms and conditions of service, Interconnection Facilities, or Network Upgrades.

13.5.4 Costs.

Each Party shall be responsible for its own costs incurred during the arbitration process and for the following costs, if applicable: (1) the cost of the arbitrator chosen by the Party to sit on the three member panel and one half of the cost of the third arbitrator chosen; or (2) one half the cost of the single arbitrator jointly chosen by the Parties.

13.6 Local Furnishing Bonds.

13.6.1 Transmission Providers That Own Facilities Financed by Local Furnishing Bonds.

This provision is applicable only to a Transmission Provider that has financed facilities for the local furnishing of electric energy with tax-exempt bonds, as described in Section 142(f) of the Internal Revenue Code ("local furnishing bonds"). Notwithstanding any other provision of this LGIA and LGIP, Transmission Provider shall not be required to provide Interconnection Service to Interconnection Customer pursuant to this LGIA and LGIP if the provision of such Transmission Service would jeopardize the tax-exempt status of any local furnishing bond(s) used to finance Transmission Provider's facilities that would be used in providing such Interconnection Service.

13.6.2 Alternative Procedures for Requesting Interconnection Service.

If Transmission Provider determines that the provision of Interconnection Service requested by Interconnection Customer

would jeopardize the tax-exempt status of any local furnishing bond(s) used to finance its facilities that would be used in providing such Interconnection Service, it shall advise the Interconnection Customer within thirty (30) Calendar Days of receipt of the Interconnection Request.

Interconnection Customer thereafter may renew its request for interconnection using the process specified in Article 5.2(ii) of the Transmission Provider's Tariff.

APPENDIX 1 to LGIP

INTERCONNECTION REQUEST FOR A LARGE GENERATING FACILITY

1. The undersigned Interconnection Customer submits this request to interconnect its Large Generating Facility with Transmission Provider's Transmission System pursuant to a Tariff.

2. This Interconnection Request is for (check one):
   _____A proposed new Large Generating Facility.
   _____An increase in the generating capacity or a Material Modification of an existing Generating Facility.
   _____A Generating Facility proposed for inclusion in a resource solicitation process.

3. The type of interconnection service requested (check one):
   _____Energy Resource Interconnection Service
   _____Network Resource Interconnection Service

4. _____Check here only if Interconnection Customer requesting Network Resource Interconnection Service also seeks to have its Generating Facility studied for Energy Resource Interconnection Service

5. Interconnection Customer provides the following information:

   a. Address or location or the proposed new Large Generating Facility site (to the extent known) or, in the case of an existing Generating Facility, the name and specific location of the existing Generating Facility;
   b. Maximum summer at ____ degrees C and winter at _____ degrees C megawatt electrical output of the proposed new Large Generating Facility or the amount of megawatt increase in the generating capacity of an existing Generating Facility;
   c. General description of the equipment configuration;
   d. Commercial Operation Date (Day, Month, and Year);
   e. Name, address, telephone number, and e-mail address of Interconnection Customer's contact person;
   f. Approximate location of the proposed Point of Interconnection (optional); and
   g. Interconnection Customer Data (set forth in Attachment A)

6. Applicable deposit amount as specified in the LGIP.

7. Evidence of Site Control as specified in the LGIP (check one)
   ____Is attached to this Interconnection Request
   ____Will be provided at a later date in accordance with this LGIP

8. This Interconnection Request shall be submitted to the representative indicated below:

   [To be completed by Transmission Provider]

9. Representative of Interconnection Customer to contact:

[To be completed by Interconnection Customer]

10. This Interconnection Request is submitted by:

Name of Interconnection Customer: _____

By (signature): _____

Name (type or print): _____

Title: _____

Date: _____

Attachment A to Appendix 1
Interconnection Request

LARGE GENERATING FACILITY DATA

UNIT RATINGS

kVA _____ °F _____ Voltage _____
Power Factor_____
Speed (RPM) _____ Connection (e.g. Wye) _____
Short Circuit Ratio _____ Frequency, Hertz _____
Stator Amperes at Rated kVA _____ Field Volts _____
Max Turbine MW _____ °F _____

COMBINED TURBINE-GENERATOR-EXCITER INERTIA DATA

Inertia Constant, H =_____kW sec/kVA
Moment-of-Inertia, WR^2 =_____lb. ft.^{2}

REACTANCE DATA (PER UNIT-RATED KVA)

	DIRECT AXIS	QUADRATURE AXIS
Synchronous – saturated	X_{dv}_____	X_{qv}_____
Synchronous – unsaturated	X_{di}_____	X_{qi}_____
Transient – saturated	X'_{dv}_____	X'_{qv}_____
Transient – unsaturated	X'_{di}_____	X'_{qi}_____
Subtransient – saturated	X''_{dv}_____	X''_{qv}_____
Subtransient – unsaturated	X''_{di}_____	X''_{qi}_____
Negative Sequence – saturated	$X2_v$_____	
Negative Sequence – unsaturated	$X2_i$_____	
Zero Sequence – saturated	$X0_v$_____	
Zero Sequence – unsaturated	$X0_i$_____	
Leakage Reactance	Xl_m_____	

FIELD TIME CONSTANT DATA (SEC)

Open Circuit	T'_{do}_____	T'_{qo}_____
Three-Phase Short Circuit Transient	T'_{d3}_____	T'_{q}_____
Line to Line Short Circuit Transient	T'_{d1}_____	
Short Circuit Subtransient	T''_{d}_____	T''_{q}_____
Open Circuit Subtransient	T'_{d2}_____	
Line to Neutral Short Circuit Transient	T''_{do}_____	T''_{qo}_____

ARMATURE TIME CONSTANT DATA (SEC)

Three Phase Short Circuit T_{a3}_____
Line to Line Short Circuit T_{a2}_____
Line to Neutral Short Circuit T_{a1}_____

NOTE: If requested information is not applicable, indicate by marking "N/A."

MW CAPABILITY AND PLANT CONFIGURATION
LARGE GENERATING FACILITY DATA

ARMATURE WINDING RESISTANCE DATA (PER UNIT)

Positive R_1_____
Negative R_2_____
Zero R_0_____

Rotor Short Time Thermal Capacity I_2^2t = _____
Field Current at Rated kVA, Armature Voltage and PF =_____amps
Field Current at Rated kVA and Armature Voltage, 0 PF =_____amps
Three Phase Armature Winding Capacitance =_____microfarad
Field Winding Resistance = _____ ohms _____°C
Armature Winding Resistance (Per Phase) =_____ ohms _____°C

CURVES

Provide Saturation, Vee, Reactive Capability, Capacity Temperature Correction curves. Designate normal and emergency Hydrogen Pressure operating range for multiple curves.

GENERATOR STEP-UP TRANSFORMER DATA RATINGS

Capacity Self-cooled/
Maximum Nameplate
_____/_____kVA

Voltage Ratio(Generator Side/System side/Tertiary)
_____/_____/_____kV

Winding Connections (Low V/High V/Tertiary V (Delta or Wye))
_____/_____/_____

Fixed Taps Available _____

Present Tap Setting _____

IMPEDANCE

Positive
Z_1 (on self-cooled kVA rating) _____%_____X/R

Zero
Z_0 (on self-cooled kVA rating) _____%_____X/R

EXCITATION SYSTEM DATA

Identify appropriate IEEE model block diagram of excitation system and power system stabilizer (PSS) for computer representation in power system stability simulations and the corresponding excitation system and PSS constants for use in the model.

GOVERNOR SYSTEM DATA

Identify appropriate IEEE model block diagram of governor system for computer representation in power system stability simulations and the corresponding governor system constants for use in the model.

WIND GENERATORS

Number of generators to be interconnected pursuant to this Interconnection Request: _____

Elevation: _____ Single Phase _____Three Phase _____

Inverter manufacturer, model name, number, and version:
_____

List of adjustable setpoints for the protective equipment or software:
_____

Note: A completed General Electric Company Power Systems Load Flow (PSLF) data sheet or other compatible formats, such as IEEE and PTI power flow models, must be supplied with the Interconnection Request. If other data sheets are more appropriate to the proposed device, then they shall be provided and discussed at Scoping Meeting.

INDUCTION GENERATORS

(*) Field Volts: _____
(*) Field Amperes: _____
(*) Motoring Power (kW): _____
(*) Neutral Grounding Resistor (If Applicable: _____
(*) I_2^2t or K (Heating Time Constant): _____

(*) Rotor Resistance: _____
(*) Stator Resistance: _____
(*) Stator Reactance: _____
(*) Rotor Reactance: _____
(*) Magnetizing Reactance: _____
(*) Short Circuit Reactance: _____
(*) Exciting Current: _____
(*) Temperature Rise: _____
(*) Frame Size: _____
(*) Design Letter: _____
(*) Reactive Power Required In Vars (No Load): _____
(*) Reactive Power Required In Vars (Full Load): _____
(*) Total Rotating Inertia, H: _____Per Unit on KVA Base

Note: Please consult Transmission Provider prior to submitting the Interconnection Request to determine if the information designated by (*) is required.

APPENDIX 2 to LGIP
INTERCONNECTION FEASIBILITY STUDY AGREEMENT

THIS AGREEMENT is made and entered into this_____ day of_____, 20___ by and between_____, a _____ organized and existing under the laws of the State of_____, ("Interconnection Customer,") and _____a _____existing under the laws of the State of _____, ("Transmission Provider "). Interconnection Customer and Transmission Provider each may be referred to as a "Party," or collectively as the "Parties."

RECITALS

WHEREAS, Interconnection Customer is proposing to develop a Large Generating Facility or generating capacity addition to an existing Generating Facility consistent with the Interconnection Request submitted by Interconnection Customer dated _____; and

WHEREAS, Interconnection Customer desires to interconnect the Large Generating Facility with the Transmission System; and

WHEREAS, Interconnection Customer has requested Transmission Provider to perform an Interconnection Feasibility Study to assess the feasibility of interconnecting the proposed Large Generating Facility to the Transmission System, and of any Affected Systems;

NOW, THEREFORE, in consideration of and subject to the mutual covenants contained herein the Parties agreed as follows:

1.0 When used in this Agreement, with initial capitalization, the terms specified shall have the meanings indicated in Transmission Provider's FERC-approved LGIP.

2.0 Interconnection Customer elects and Transmission Provider shall cause to be performed an Interconnection Feasibility Study consistent with Section 6.0 of this LGIP in accordance with the Tariff.

3.0 The scope of the Interconnection Feasibility Study shall be subject to the assumptions set forth in Attachment A to this Agreement.

4.0 The Interconnection Feasibility Study shall be based on the technical information provided by Interconnection Customer in the Interconnection Request, as may be modified as the result of the Scoping Meeting. Transmission Provider reserves the right to request additional technical information from Interconnection Customer as may reasonably become necessary consistent with Good Utility Practice during the course of the Interconnection Feasibility Study and as designated in accordance with Section 3.3.4 of the LGIP. If, after the designation of the Point of Interconnection pursuant to Section 3.3.4 of the LGIP, Interconnection Customer modifies its Interconnection Request pursuant to Section 4.4, the time to complete the Interconnection Feasibility Study may be extended.

5.0 The Interconnection Feasibility Study report shall provide the following information:

- preliminary identification of any circuit breaker short circuit capability limits exceeded as a result of the interconnection;

- preliminary identification of any thermal overload or voltage limit violations resulting from the interconnection; and

- preliminary description and non-bonding estimated cost of facilities required to interconnect the Large Generating Facility to the Transmission System and to address the identified short circuit and power flow issues.

6.0 Interconnection Customer shall provide a deposit of $10,000 for the performance of the Interconnection Feasibility Study.

Upon receipt of the Interconnection Feasibility Study Transmission Provider shall charge and Interconnection Customer shall pay the actual costs of the Interconnection Feasibility Study.

Any difference between the deposit and the actual cost of the study shall be paid by or refunded to Interconnection Customer, as appropriate.

7.0 Miscellaneous. The Interconnection Feasibility Study Agreement shall include standard miscellaneous terms including, but not limited to, indemnities, representations, disclaimers, warranties, governing law, amendment, execution, waiver, enforceability and assignment, that reflect best practices in the electric industry, and that are consistent with regional practices, Applicable Laws and Regulations, and the organizational nature of each Party. All of these provisions, to the extent practicable, shall be consistent with the provisions of the LGIP and the LGIA.

IN WITNESS WHEREOF, the Parties have caused this Agreement to be duly executed by their duly authorized officers or agents on the day and year first above written.

[Insert name of Transmission Provider or Transmission Owner, if applicable]

By: _____ By: _____

Title: _____Title: _____

Date: _____Date: _____

[Insert name of Interconnection Customer]

By: _____

Title: _____

Date: _____

Attachment A to Appendix 2
Interconnection Feasibility
Study Agreement

ASSUMPTIONS USED IN CONDUCTING THE INTERCONNECTION FEASIBILITY STUDY

The Interconnection Feasibility Study will be based upon the information set forth in the Interconnection Request and agreed upon in the Scoping Meeting held on _____.

Designation of Point of Interconnection and configuration to be studied.
Designation of alternative Point(s) of Interconnection and configuration.

[Above assumptions to be completed by Interconnection Customer and other assumptions to be provided by Interconnection Customer and Transmission Provider]

APPENDIX 3 to LGIP
INTERCONNECTION SYSTEM IMPACT STUDY AGREEMENT

THIS AGREEMENT is made and entered into this_____ day of_____, 20___ by and between_____, a _____ organized and existing under the laws of the State of_____, ("Interconnection Customer,") and _____a _____existing under the laws of the State of _____, ("Transmission Provider "). Interconnection Customer and Transmission Provider each may be referred to as a "Party," or collectively as the "Parties."

RECITALS

WHEREAS, Interconnection Customer is proposing to develop a Large Generating Facility or generating capacity addition to an existing Generating Facility consistent with the Interconnection Request submitted by Interconnection Customer dated _____; and

WHEREAS, Interconnection Customer desires to interconnect the Large Generating Facility with the Transmission System;

WHEREAS, Transmission Provider has completed an Interconnection Feasibility Study (the "Feasibility Study") and provided the results of said study to Interconnection Customer (This recital to be omitted if Transmission Provider does not require the Interconnection Feasibility Study.); and

WHEREAS, Interconnection Customer has requested Transmission Provider to perform an Interconnection System Impact Study to assess the impact of interconnecting the Large Generating Facility to the Transmission System, and of any Affected Systems;

NOW, THEREFORE, in consideration of and subject to the mutual covenants contained herein the Parties agreed as follows:

1.0 When used in this Agreement, with initial capitalization, the terms specified shall have the meanings indicated in Transmission Provider's FERC-approved LGIP.

2.0 Interconnection Customer elects and Transmission Provider shall cause to be performed an Interconnection System Impact Study consistent with Section 7.0 of this LGIP in accordance with the Tariff.

3.0 The scope of the Interconnection System Impact Study shall be subject to the assumptions set forth in Attachment A to this Agreement.

4.0 The Interconnection System Impact Study will be based upon the results of the Interconnection Feasibility Study and the technical information provided by Interconnection Customer in the Interconnection Request, subject to any modifications in accordance with Section 4.4 of the LGIP. Transmission Provider reserves the right to request additional technical information from Interconnection Customer as may reasonably become necessary consistent with Good Utility Practice during the course of the Interconnection Customer

System Impact Study. If Interconnection Customer modifies its designated Point of Interconnection, Interconnection Request, or the technical information provided therein is modified, the time to complete the Interconnection System Impact Study may be extended.

5.0 The Interconnection System Impact Study report shall provide the following information:

- identification of any circuit breaker short circuit capability limits exceeded as a result of the interconnection;

- identification of any thermal overload or voltage limit violations resulting from the interconnection;

- identification of any instability or inadequately damped response to system disturbances resulting from the interconnection and

- description and non-binding, good faith estimated cost of facilities required to interconnect the Large Generating Facility to the Transmission System and to address the identified short circuit, instability, and power flow issues.

6.0 Interconnection Customer shall provide a deposit of $50,000 for the performance of the Interconnection System Impact Study. Transmission Provider's good faith estimate for the time of completion of the Interconnection System Impact Study is [insert date].

Upon receipt of the Interconnection System Impact Study, Transmission Provider shall charge and Interconnection Customer shall pay the actual costs of the Interconnection System Impact Study.

Any difference between the deposit and the actual cost of the study shall be paid by or refunded to Interconnection Customer, as appropriate.

7.0 Miscellaneous. The Interconnection System Impact Study Agreement shall include standard miscellaneous terms including, but not limited to, indemnities, representations, disclaimers, warranties, governing law, amendment, execution, waiver, enforceability and assignment, that reflect best practices in the electric industry, that are consistent with regional practices, Applicable Laws and Regulations and the organizational nature of each Party. All of these provisions, to the extent practicable, shall be consistent with the provisions of the LGIP and the LGIA.

IN WITNESS THEREOF, the Parties have caused this Agreement to be duly executed by their duly authorized officers or agents on the day and year first above written.

[Insert name of Transmission Provider or Transmission Owner, if applicable]

By: _____ By: _____

Title: _____ Title: _____

Date: _____ Date: _____

[Insert name of Interconnection Customer]

By: _____

Title: _____

Date: _____

Attachment A To Appendix 3
Interconnection System Impact
Study Agreement

ASSUMPTIONS USED IN CONDUCTING THE INTERCONNECTION SYSTEM IMPACT STUDY

The Interconnection System Impact Study will be based upon the results of the Interconnection Feasibility Study, subject to any modifications in accordance with Section 4.4 of the LGIP, and the following assumptions:

Designation of Point of Interconnection and configuration to be studied.
Designation of alternative Point(s) of Interconnection and configuration.

[Above assumptions to be completed by Interconnection Customer and other assumptions to be provided by Interconnection Customer and Transmission Provider]

APPENDIX 4 to LGIP
INTERCONNECTION FACILITIES STUDY AGREEMENT

THIS AGREEMENT is made and entered into this_____ day of_____, 20___ by and between_____, a _____ organized and existing under the laws of the State of_____, ("Interconnection Customer,") and _____a _____existing under the laws of the State of _____, ("Transmission Provider "). Interconnection Customer and Transmission Provider each may be referred to as a "Party," or collectively as the "Parties."

RECITALS

WHEREAS, Interconnection Customer is proposing to develop a Large Generating Facility or generating capacity addition to an existing Generating Facility consistent with the Interconnection Request submitted by Interconnection Customer dated _____; and

WHEREAS, Interconnection Customer desires to interconnect the Large Generating Facility with the Transmission System;

WHEREAS, Transmission Provider has completed an Interconnection System Impact Study (the "System Impact Study") and provided the results of said study to Interconnection Customer; and

WHEREAS, Interconnection Customer has requested Transmission Provider to perform an Interconnection Facilities Study to specify and estimate the cost of the equipment, engineering, procurement and construction work needed to implement the conclusions of the Interconnection System Impact Study in accordance with Good Utility Practice to physically and electrically connect the Large Generating Facility to the Transmission System.

NOW, THEREFORE, in consideration of and subject to the mutual covenants contained herein the Parties agreed as follows:

1.0 When used in this Agreement, with initial capitalization, the terms specified shall have the meanings indicated in Transmission Provider's FERC-approved LGIP.

2.0 Interconnection Customer elects and Transmission Provider shall cause an Interconnection Facilities Study consistent with Section 8.0 of this LGIP to be performed in accordance with the Tariff.

3.0 The scope of the Interconnection Facilities Study shall be subject to the assumptions set forth in Attachment A and the data provided in Attachment B to this Agreement.

4.0 The Interconnection Facilities Study report (i) shall provide a description, estimated cost of (consistent with Attachment A), schedule for required facilities to interconnect the Large Generating Facility to the Transmission System and (ii) shall address the short circuit, instability, and power flow issues identified in the Interconnection System Impact Study.

5.0 Interconnection Customer shall provide a deposit of $100,000 for the performance of the Interconnection Facilities Study. The time for completion of the Interconnection Facilities Study is specified in Attachment A.

Transmission Provider shall invoice Interconnection Customer on a monthly basis for the work to be conducted on the Interconnection Facilities Study each month. Interconnection Customer shall pay invoiced amounts within thirty (30) Calendar Days of receipt of invoice. Transmission Provider shall continue to hold the amounts on deposit until settlement of the final invoice.

6.0 Miscellaneous. The Interconnection Facility Study Agreement shall include standard miscellaneous terms including, but not limited to, indemnities, representations, disclaimers, warranties, governing law, amendment, execution, waiver, enforceability and assignment, that reflect best practices in the electric industry, and that are consistent with regional practices, Applicable Laws and Regulations, and the organizational nature of each Party. All of these provisions, to the extent practicable, shall be consistent with the provisions of the LGIP and the LGIA.

IN WITNESS WHEREOF, the Parties have caused this Agreement to be duly executed by their duly authorized officers or agents on the day and year first above written.

[**Insert name of Transmission Provider or Transmission Owner, if applicable]**

By: _____ By: _____

Title: _____Title: _____

Date: _____ Date: _____

[Insert name of Interconnection Customer]

By: _____

Title: _____

Date: _____

Attachment A To Appendix 4
Interconnection Facilities
Study Agreement

INTERCONNECTION CUSTOMER SCHEDULE ELECTION FOR CONDUCTING THE INTERCONNECTION FACILITIES STUDY

Transmission Provider shall use Reasonable Efforts to complete the study and issue a draft Interconnection Facilities Study report to Interconnection Customer within the following number of days after of receipt of an executed copy of this Interconnection Facilities Study Agreement:

- ninety (90) Calendar Days with no more than a +/- 20 percent cost estimate contained in the report, or

- one hundred eighty (180) Calendar Days with no more than a +/- 10 percent cost estimate contained in the report.

Attachment B to Appendix 4
Interconnection Facilities
Study Agreement

DATA FORM TO BE PROVIDED BY INTERCONNECTION CUSTOMER WITH THE INTERCONNECTION FACILITIES STUDY AGREEMENT

Provide location plan and simplified one-line diagram of the plant and station facilities. For staged projects, please indicate future generation, transmission circuits, etc.

One set of metering is required for each generation connection to the new ring bus or existing Transmission Provider station. Number of generation connections:

On the one line diagram indicate the generation capacity attached at each metering location. (Maximum load on CT/PT)

On the one line diagram indicate the location of auxiliary power. (Minimum load on CT/PT) Amps

Will an alternate source of auxiliary power be available during CT/PT maintenance?
_____Yes _____ No

Will a transfer bus on the generation side of the metering require that each meter set be designed for the total plant generation? _____ Yes _____ No (Please indicate on one line diagram).

What type of control system or PLC will be located at Interconnection Customer's Large Generating Facility?

_____

What protocol does the control system or PLC use?

_____

Please provide a 7.5-minute quadrangle of the site. Sketch the plant, station, transmission line, and property line.

Physical dimensions of the proposed interconnection station:

_____

Bus length from generation to interconnection station:

_____

Line length from interconnection station to Transmission Provider's transmission line.

_____

Tower number observed in the field. (Painted on tower leg)* _____

Number of third party easements required for transmission lines*:

_____

* To be completed in coordination with Transmission Provider.

Is the Large Generating Facility in the Transmission Provider's service area?

_____ Yes _____ No Local provider: _____

Please provide proposed schedule dates:

Begin Construction	Date: _____
Generator step-up transformer receives back feed power	Date: _____
Generation Testing	Date: _____
Commercial Operation	Date: _____

APPENDIX 5 to LGIP
OPTIONAL INTERCONNECTION STUDY AGREEMENT

THIS AGREEMENT is made and entered into this___day of _____, 20___ by and between_____, a _____ organized and existing under the laws of the State of_____, ("Interconnection Customer,") and _____a _____existing under the laws of the State of , ("Transmission Provider "). Interconnection Customer and Transmission Provider each may be referred to as a "Party," or collectively as the "Parties."

RECITALS

WHEREAS, Interconnection Customer is proposing to develop a Large Generating Facility or generating capacity addition to an existing Generating Facility consistent with the Interconnection Request submitted by Interconnection Customer dated _____; and

WHEREAS, Interconnection Customer is proposing to establish an interconnection with the Transmission System; and

WHEREAS, Interconnection Customer has submitted to Transmission Provider an Interconnection Request; and

WHEREAS, on or after the date when Interconnection Customer receives the Interconnection System Impact Study results, Interconnection Customer has further requested that Transmission Provider prepare an Optional Interconnection Study;

NOW, THEREFORE, in consideration of and subject to the mutual covenants contained herein the Parties agree as follows:

1.0 When used in this Agreement, with initial capitalization, the terms specified shall have the meanings indicated in Transmission Provider's FERC-approved LGIP.

2.0 Interconnection Customer elects and Transmission Provider shall cause an Optional Interconnection Study consistent with Section 10.0 of this LGIP to be performed in accordance with the Tariff.

3.0 The scope of the Optional Interconnection Study shall be subject to the assumptions set forth in Attachment A to this Agreement.

4.0 The Optional Interconnection Study shall be performed solely for informational purposes.

5.0 The Optional Interconnection Study report shall provide a sensitivity analysis based on the assumptions specified by Interconnection Customer in Attachment A to this Agreement. The Optional Interconnection Study will identify Transmission Provider's Interconnection Facilities and the Network Upgrades, and the estimated cost thereof that may be required to provide

transmission service or interconnection service based upon the assumptions specified by Interconnection Customer in Attachment A.

6.0 Interconnection Customer shall provide a deposit of $10,000 for the performance of the Optional Interconnection Study. Transmission Provider's good faith estimate for the time of completion of the Optional Interconnection Study is [insert date].

Upon receipt of the Optional Interconnection Study, Transmission Provider shall charge and Interconnection Customer shall pay the actual costs of the Optional Study.

Any difference between the initial payment and the actual cost of the study shall be paid by or refunded to Interconnection Customer, as appropriate.

7.0 Miscellaneous. The Optional Interconnection Study Agreement shall include standard miscellaneous terms including, but not limited to, indemnities, representations, disclaimers, warranties, governing law, amendment, execution, waiver, enforceability and assignment, that reflect best practices in the electric industry, and that are consistent with regional practices, Applicable Laws and Regulations, and the organizational nature of each Party. All of these provisions, to the extent practicable, shall be consistent with the provisions of the LGIP and the LGIA.

IN WITNESS WHEREOF, the Parties have caused this Agreement to be duly executed by their duly authorized officers or agents on the day and year first above written.

[Insert name of Transmission Provider or Transmission Owner, if applicable]

By: _____ By: _____

Title: _____Title: _____

Date: _____ Date: _____

[Insert name of Interconnection Customer]

By: _____

Title: _____

Date: _____

APPENDIX 6 to LGIP

STANDARD LARGE GENERATOR INTERCONNECTION AGREEMENT (LGIA)

(Applicable to Generating Facilities that exceed 20 MW)

TABLE OF CONTENTS

Recitals
Article 1. Definitions
Article 2. Effective Date, Term,, and Termination
2.1 Effective Date
2.2 Term of Agreement
2.3 Termination Procedures
2.3.1 Written Notice
2.3.2 Default
2.4 Termination Costs
2.5 Disconnection
2.6 Survival
Article 3. Regulatory Filings
3.1 Filing
Article 4. Scope of Service
4.1 Interconnection Product Options
4.1.1 Energy Resource Interconnection Service
4.1.1.1 The Product
4.1.1.2 Transmission Delivery Service Implications
4.1.2 Network Resource Interconnection Service
4.1.2.1 The Product
4.1.2.2 Transmission Delivery Service Implications
4.2 Provision of Service
4.3 Performance Standards
4.4 No Transmission Delivery Service
4.5 Interconnection Customer Provided Services
Article 5. Interconnection Facilities Engineering, Procurement, & Construction
5.1 Options
5.1.1 Standard Option
5.1.2 Alternate Option
5.1.3 Option to Build
5.1.4 Negotiated Option
5.2 General Conditions Applicable to Option to Build
5.3 Liquidated Damages
5.4 Power System Stabilizers
5.5 Equipment Procurement
5.6 Construction Commencement
5.7 Work Progress
5.8 Information Exchange
5.9 Limited Operation
5.10 Interconnection Customer's Interconnection Facilities ('ICIF')
5.10.1 Interconnection Customer's Interconnection Facility Specifications
5.10.2 Transmission Provider's Review
5.10.3 ICIF Construction
5.11 Transmission Provider's Interconnection Facilities Construction
5.12 Access Rights
5.13 Lands of Other Property Owners
5.14 Permits
5.15 Early Construction of Base Case Facilities

5.16 Suspension
5.17 Taxes
5.17.1 Interconnection Customer Payments Not Taxable
5.17.2 Representations and Covenants
5.17.3 Indemnification for the Cost Consequences of Current Tax Liability Imposed Upon the Transmission Provider
5.17.4 Tax Gross-Up Amount
5.17.5 Private Letter Ruling or Change or Clarification of Law
5.17.6 Subsequent Taxable Events
5.17.7 Contests
5.17.8 Refund
5.17.9 Taxes Other Than Income Taxes
5.17.10 Transmission Owners Who Are Not Transmission Providers
5.18 Tax Status
5.19 Modification
5.19.1 General
5.19.2 Standards
5.19.3 Modification Costs
Article 6. Testing and Inspection
6.1 Pre-Commercial Operation Date Testing and Modifications
6.2 Post-Commercial Operation Date Testing and Modifications
6.3 Right to Observe Testing
6.4 Right to Inspect
Article 7. Metering
7.1 General
7.2 Check Meters
7.3 Standards
7.4 Testing of Metering Equipment
7.5 Metering Data
Article 8. Communications
8.1 Interconnection Customer Obligations
8.2 Remote Terminal Unit
8.3 No Annexation
8.4 Provision of Data from a Variable Energy Resource
Article 9. Operations
9.1 General
9.2 Control Area Notification
9.3 Transmission Provider Obligations
9.4 Interconnection Customer Obligations
9.5 Start-Up and Synchronization
9.6 Reactive Power
9.6.1 Power Factor Design Criteria
9.6.2 Voltage Schedules
9.6.2.1 Governors and Regulators
9.6.3 Payment for Reactive Power
9.7 Outages and Interruptions
9.7.1 Outages
9.7.1.1 Outage Authority and Coordination
9.7.1.2 Outage Schedules
9.7.1.3 Outage Restoration

9.7.2 Interruption of Service
9.7.3 Under-Frequency and Over Frequency Conditions
9.7.4 System Protection and Other Control Requirements
9.7.4.1 System Protection Facilities
9.7.5 Requirements for Protection
9.7.6 Power Quality
9.8 Switching and Tagging Rules
9.9 Use of Interconnection Facilities by Third Parties
9.9.1 Purpose of Interconnection Facilities
9.9.2 Third Party Users
9.10 Disturbance Analysis Data Exchange
Article 10. Maintenance
10.1 Transmission Provider Obligations
10.2 Interconnection Customer Obligations
10.3 Coordination
10.4 Secondary Systems
10.5 Operating and Maintenance Expenses
Article 11. Performance Obligation
11.1 Interconnection Customer Interconnection Facilities
11.2 Transmission Provider's Interconnection Facilities
11.3 Network Upgrades and Distribution Upgrades
11.4 Transmission Credits
11.4.1 Repayment of Amounts Advanced for Network Upgrades
11.5 Provision of Security
11.6 Interconnection Customer Compensation
11.6.1 Interconnection Customer Compensation for Actions During Emergency Condition
Article 12. Invoice
12.1 General
12.2 Final Invoice
12.3 Payment
12.4 Disputes
Article 13. Emergencies
13.1 Definition
13.2 Obligations
13.3 Notice
13.4 Immediate Action
13.5 Transmission Provider Authority
13.5.1 General
13.5.2 Reduction and Disconnection
13.6 Interconnection Customer Authority
13.7 Limited Liability
Article 14. Regulatory Requirements and Governing Law
14.1 Regulatory Requirements
14.2 Governing Law
Article 15. Notices
15.1 General
15.2 Billings and Payments
15.3 Alternative Forms of Notice
15.4 Operations and Maintenance Notice

Article 16. Force Majeure
Article 17. Default
17.1 Default
17.1.1 General
17.1.2 Right to Terminate
Article 18. Indemnity, Consequential Damages and Insurance
18.1 Indemnity
18.1.1 Indemnified Person
18.1.2 Indemnifying Party
18.1.3 Indemnity Procedures
18.2 Consequential Damages
18.3 Insurance
Article 19. Assignment
Article 20. Severability
Article 21. Comparability
Article 22. Confidentiality
22.1 Confidentiality
22.1.1 Term
22.1.2 Scope
22.1.3 Release of Confidential Information
22.1.4 Rights
22.1.5 No Warranties
22.1.6 Standard of Care
22.1.7 Order of Disclosure
22.1.8 Termination of Agreement
22.1.9 Remedies
22.1.10 Disclosure to FERC, its Staff, or a State
Article 23. Environmental Releases
Article 24. Information Requirements
24.1 Information Acquisition
24.2 Information Submission by Transmission Provider
24.3 Updated Information Submission by Interconnection Customer
24.4 Information Supplementation
Article 25. Information Access and Audit Rights
25.1 Information Access
25.2 Reporting of Non-Force Majeure Events
25.3 Audit Rights
25.4 Audit Rights Periods
25.4.1 Audit Rights Period for Construction-Related Accounts and Records
25.4.2 Audit Rights Period for All Other Accounts and Records
25.5 Audit Results
Article 26. Subcontractors
26.1 General
26.2 Responsibility of Principal
26.3 No Limitation by Insurance
Article 27. Disputes
27.1 Submission
27.2 External Arbitration Procedures
27.3 Arbitration Decisions
27.4 Costs

Article 28. Representations, Warranties, and Covenants
28.1 General
28.1.1 Good Standing
28.1.2 Authority
28.1.3 No Conflict
28.1.4 Consent and Approval
Article 29. Joint Operating Committee
Article 30. Miscellaneous
30.1 Binding Effect
30.2 Conflicts
30.3 Rules of Interpretation
30.4 Entire Agreement
30.5 No Third Party Beneficiaries
30.6 Waiver
30.7 Headings
30.8 Multiple Counterparts
30.9 Amendment
30.10 Modification by the Parties
30.11 Reservation of Rights
30.12 No Partnership

Appendix A - Interconnection Facilities, Network Upgrades, and Distribution Upgrades

Appendix B – Milestones

Appendix C – Interconnection Details

Appendix D – Security Arrangements Details

Appendix E – Commercial Operation Date

Appendix F – Addresses for Delivery of Notices and Billings

Appendix G – Requirements of Generators Relying on Newer Technologies

STANDARD LARGE GENERATOR INTERCONNECTION AGREEMENT

THIS STANDARD LARGE GENERATOR INTERCONNECTION AGREEMENT ("Agreement" or "LGIA") is made and entered into this ____ day of _____ 20____, by and between _____, a _____, organized and existing under the laws of the State/Commonwealth of _____, ("Interconnection Customer" with a Large Generating Facility), and _____, a _____, organized and existing under the laws of the State/Commonwealth of _____, ("Transmission Provider and/or Transmission Owner"). Interconnection Customer and Transmission Provider each may be referred to as a "Party" or collectively as the "Parties."

Recitals

WHEREAS, Transmission Provider operates the Transmission System; and

WHEREAS, Interconnection Customer intends to own, lease and/or control and operate the Generating Facility identified as a Large Generating Facility in Appendix C to this Agreement; and,

WHEREAS, Interconnection Customer and Transmission Provider have agreed to enter into this Agreement for the purpose of interconnecting the Large Generating Facility with the Transmission System;

NOW, THEREFORE, in consideration of and subject to the mutual covenants contained herein, it is agreed:

When used in this Standard Large Generator Interconnection Agreement, terms with initial capitalization that are not defined in Article 1 shall have the meanings specified in the Article in which they are used or the Open Access Transmission Tariff (Tariff).

Article 1. Definitions

Adverse System Impact shall mean the negative effects due to technical or operational limits on conductors or equipment being exceeded that may compromise the safety and reliability of the electric system.

Affected System shall mean an electric system other than the Transmission Provider's Transmission System that may be affected by the proposed interconnection.

Affected System Operator shall mean the entity that operates an Affected System.

Affiliate shall mean, with respect to a corporation, partnership or other entity, each such other corporation, partnership or other entity that directly or indirectly, through one or more intermediaries, controls, is controlled by, or is under common control with, such corporation, partnership or other entity.

Ancillary Services shall mean those services that are necessary to support the transmission of capacity and energy from resources to loads while maintaining reliable operation of the Transmission Provider's Transmission System in accordance with Good Utility Practice.

Applicable Laws and Regulations shall mean all duly promulgated applicable federal, state and local laws, regulations, rules, ordinances, codes, decrees, judgments, directives, or judicial or administrative orders, permits and other duly authorized actions of any Governmental Authority.

Applicable Reliability Council shall mean the reliability council applicable to the Transmission System to which the Generating Facility is directly interconnected.

Applicable Reliability Standards shall mean the requirements and guidelines of NERC, the Applicable Reliability Council, and the Control Area of the Transmission System to which the Generating Facility is directly interconnected.

Base Case shall mean the base case power flow, short circuit, and stability data bases used for the Interconnection Studies by the Transmission Provider or Interconnection Customer.

Breach shall mean the failure of a Party to perform or observe any material term or condition of the Standard Large Generator Interconnection Agreement.

Breaching Party shall mean a Party that is in Breach of the Standard Large Generator Interconnection Agreement.

Business Day shall mean Monday through Friday, excluding Federal Holidays.

Calendar Day shall mean any day including Saturday, Sunday or a Federal Holiday.

Clustering shall mean the process whereby a group of Interconnection Requests is studied together, instead of serially, for the purpose of conducting the Interconnection System Impact Study.

Commercial Operation shall mean the status of a Generating Facility that has commenced generating electricity for sale, excluding electricity generated during Trial Operation.

Commercial Operation Date of a unit shall mean the date on which the Generating Facility commences Commercial Operation as agreed to by the Parties pursuant to Appendix E to the Standard Large Generator Interconnection Agreement.

Confidential Information shall mean any confidential, proprietary or trade secret information of a plan, specification, pattern, procedure, design, device, list, concept, policy or compilation relating to the present or planned business of a Party, which is designated as confidential by the Party supplying the information, whether conveyed orally, electronically, in writing, through inspection, or otherwise.

Control Area shall mean an electrical system or systems bounded by interconnection metering and telemetry, capable of controlling generation to maintain its interchange schedule with other Control Areas and contributing to frequency regulation of the interconnection. A Control Area must be certified by the Applicable Reliability Council.

Default shall mean the failure of a Breaching Party to cure its Breach in accordance with Article 17 of the Standard Large Generator Interconnection Agreement.

Dispute Resolution shall mean the procedure for resolution of a dispute between the Parties in which they will first attempt to resolve the dispute on an informal basis.

Distribution System shall mean the Transmission Provider's facilities and equipment used to transmit electricity to ultimate usage points such as homes and industries directly from nearby generators or from interchanges with higher voltage transmission networks which transport bulk power over longer distances. The voltage levels at which distribution systems operate differ among areas.

Distribution Upgrades shall mean the additions, modifications, and upgrades to the Transmission Provider's Distribution System at or beyond the Point of Interconnection to facilitate interconnection of the Generating Facility and render the transmission service necessary to effect Interconnection Customer's wholesale sale of electricity in interstate commerce. Distribution Upgrades do not include Interconnection Facilities.

Effective Date shall mean the date on which the Standard Large Generator Interconnection Agreement becomes effective upon execution by the Parties subject to acceptance by FERC, or if filed unexecuted, upon the date specified by FERC.

Emergency Condition shall mean a condition or situation: (1) that in the judgment of the Party making the claim is imminently likely to endanger life or property; or (2) that, in the case of a Transmission Provider, is imminently likely (as determined in a non-discriminatory manner) to cause a material adverse effect on the security of, or damage to Transmission Provider's Transmission System, Transmission Provider's Interconnection Facilities or the electric systems of others to which the Transmission Provider's Transmission System is directly connected; or (3) that, in the case of Interconnection Customer, is imminently likely (as determined in a non-discriminatory manner) to cause a material adverse effect on the security of, or damage to, the Generating Facility or Interconnection Customer's Interconnection Facilities. System restoration and black start shall be considered Emergency Conditions; provided, that Interconnection Customer is not obligated by the Standard Large Generator Interconnection Agreement to possess black start capability.

Energy Resource Interconnection Service shall mean an Interconnection Service that allows the Interconnection Customer to connect its Generating Facility to the Transmission Provider's Transmission System to be eligible to deliver the Generating Facility's electric output using the existing firm or nonfirm capacity of the Transmission Provider's Transmission System on an as available basis. Energy Resource Interconnection Service in and of itself does not convey transmission service.

Engineering & Procurement (E&P) Agreement shall mean an agreement that authorizes the Transmission Provider to begin engineering and procurement of long lead-time items necessary for the establishment of the interconnection in order to advance the implementation of the Interconnection Request.

Environmental Law shall mean Applicable Laws or Regulations relating to pollution or protection of the environment or natural resources.

Federal Power Act shall mean the Federal Power Act, as amended, 16 U.S.C. §§ 791a et seq.

FERC shall mean the Federal Energy Regulatory Commission (Commission) or its successor.

Force Majeure shall mean any act of God, labor disturbance, act of the public enemy, war, insurrection, riot, fire, storm or flood, explosion, breakage or accident to machinery or equipment, any order, regulation or restriction imposed by governmental, military or lawfully established civilian authorities, or any other cause beyond a Party's control. A Force Majeure event does not include acts of negligence or intentional wrongdoing by the Party claiming Force Majeure.

Generating Facility shall mean Interconnection Customer's device for the production of electricity identified in the Interconnection Request, but shall not include the Interconnection Customer's Interconnection Facilities.

Generating Facility Capacity shall mean the net capacity of the Generating Facility and the aggregate net capacity of the Generating Facility where it includes multiple energy production devices.

Good Utility Practice shall mean any of the practices, methods and acts engaged in or approved by a significant portion of the electric industry during the relevant time period, or any of the practices, methods and acts which, in the exercise of reasonable judgment in light of the facts known at the time the decision was made, could have been expected to accomplish the desired result at a reasonable cost consistent with good business practices, reliability, safety and expedition. Good Utility Practice is not intended to be limited to the optimum practice, method, or act to the exclusion of all others, but rather to be acceptable practices, methods, or acts generally accepted in the region.

Governmental Authority shall mean any federal, state, local or other governmental regulatory or administrative agency, court, commission, department, board, or other governmental subdivision, legislature, rulemaking board, tribunal, or other governmental authority having jurisdiction over the Parties, their respective facilities, or the respective services they provide, and exercising or entitled to exercise any administrative, executive, police, or taxing authority or power; provided, however, that such term does not include Interconnection Customer, Transmission Provider, or any Affiliate thereof.

Hazardous Substances shall mean any chemicals, materials or substances defined as or included in the definition of "hazardous substances," "hazardous wastes," "hazardous materials," "hazardous constituents," "restricted hazardous materials," "extremely hazardous substances," "toxic substances," "radioactive substances," "contaminants," "pollutants," "toxic pollutants" or words of similar meaning and regulatory effect under any applicable Environmental Law, or any other chemical, material or substance, exposure to which is prohibited, limited or regulated by any applicable Environmental Law.

Initial Synchronization Date shall mean the date upon which the Generating Facility is initially synchronized and upon which Trial Operation begins.

In-Service Date shall mean the date upon which the Interconnection Customer reasonably expects it will be ready to begin use of the Transmission Provider's Interconnection Facilities to obtain back feed power.

Interconnection Customer shall mean any entity, including the Transmission Provider, Transmission Owner or any of the Affiliates or subsidiaries of either, that proposes to interconnect its Generating Facility with the Transmission Provider's Transmission System.

Interconnection Customer's Interconnection Facilities shall mean all facilities and equipment, as identified in Appendix A of the Standard Large Generator Interconnection Agreement, that are located between the Generating Facility and the Point of Change of Ownership, including any modification, addition, or upgrades to such facilities and equipment necessary to physically and electrically interconnect the Generating Facility to the Transmission Provider's Transmission System. Interconnection Customer's Interconnection Facilities are sole use facilities.

Interconnection Facilities shall mean the Transmission Provider's Interconnection Facilities and the Interconnection Customer's Interconnection Facilities. Collectively, Interconnection Facilities include all facilities and equipment between the Generating Facility and the Point of Interconnection, including any modification, additions or upgrades that are necessary to physically and electrically interconnect the Generating Facility to the Transmission Provider's Transmission System. Interconnection Facilities are sole use facilities and shall not include Distribution Upgrades, Stand Alone Network Upgrades or Network Upgrades.

Interconnection Facilities Study shall mean a study conducted by the Transmission Provider or a third party consultant for the Interconnection Customer to determine a list of facilities (including Transmission Provider's Interconnection Facilities and Network Upgrades as identified in the Interconnection System Impact Study), the cost of those facilities, and the time required to interconnect the Generating Facility with the Transmission Provider's Transmission System. The scope of the study is defined in Section 8 of the Standard Large Generator Interconnection Procedures.

Interconnection Facilities Study Agreement shall mean the form of agreement contained in Appendix 4 of the Standard Large Generator Interconnection Procedures for conducting the Interconnection Facilities Study.

Interconnection Feasibility Study shall mean a preliminary evaluation of the system impact and cost of interconnecting the Generating Facility to the Transmission Provider's Transmission System, the scope of which is described in Section 6 of the Standard Large Generator Interconnection Procedures.

Interconnection Feasibility Study Agreement shall mean the form of agreement contained in Appendix 2 of the Standard Large Generator Interconnection Procedures for conducting the Interconnection Feasibility Study.

Interconnection Request shall mean an Interconnection Customer's request, in the form of Appendix 1 to the Standard Large Generator Interconnection Procedures, in accordance with the Tariff, to interconnect a new Generating Facility, or to increase the capacity of, or make a Material Modification to the operating characteristics of, an existing Generating Facility that is interconnected with the Transmission Provider's Transmission System.

Interconnection Service shall mean the service provided by the Transmission Provider associated with interconnecting the Interconnection Customer's Generating Facility to the Transmission Provider's Transmission System and enabling it to receive electric energy and capacity from the Generating Facility at the Point of Interconnection, pursuant to the terms of the Standard Large Generator Interconnection Agreement and, if applicable, the Transmission Provider's Tariff.

Interconnection Study shall mean any of the following studies: the Interconnection Feasibility Study, the Interconnection System Impact Study, and the Interconnection Facilities Study described in the Standard Large Generator Interconnection Procedures.

Interconnection System Impact Study shall mean an engineering study that evaluates the impact of the proposed interconnection on the safety and reliability of Transmission Provider's Transmission System and, if applicable, an Affected System. The study shall identify and detail the system impacts that would result if the Generating Facility were interconnected without project modifications or system modifications, focusing on the Adverse System Impacts identified in the Interconnection Feasibility Study, or to study potential impacts, including but not limited to those identified in the Scoping Meeting as described in the Standard Large Generator Interconnection Procedures.

Interconnection System Impact Study Agreement shall mean the form of agreement contained in Appendix 3 of the Standard Large Generator Interconnection Procedures for conducting the Interconnection System Impact Study.

IRS shall mean the Internal Revenue Service.

Joint Operating Committee shall be a group made up of representatives from Interconnection Customers and the Transmission Provider to coordinate operating and technical considerations of Interconnection Service.

Large Generating Facility shall mean a Generating Facility having a Generating Facility Capacity of more than 20 MW.

Loss shall mean any and all losses relating to injury to or death of any person or damage to property, demand, suits, recoveries, costs and expenses, court costs, attorney fees, and all other obligations by or to third parties, arising out of or resulting from the other Party's performance, or non-performance of its obligations under the Standard Large Generator Interconnection Agreement on behalf of the indemnifying Party, except in cases of gross negligence or intentional wrongdoing by the indemnifying Party.

Material Modification shall mean those modifications that have a material impact on the cost or timing of any Interconnection Request with a later queue priority date.

Metering Equipment shall mean all metering equipment installed or to be installed at the Generating Facility pursuant to the Standard Large Generator Interconnection Agreement at the metering points, including but not limited to instrument transformers, MWh-meters, data acquisition equipment, transducers, remote terminal unit, communications equipment, phone lines, and fiber optics.

NERC shall mean the North American Electric Reliability Council or its successor organization.

Network Resource shall mean any designated generating resource owned, purchased, or leased by a Network Customer under the Network Integration Transmission Service Tariff. Network Resources do not include any resource, or any portion thereof, that is committed for sale to third parties or otherwise cannot be called upon to meet the Network Customer's Network Load on a non-interruptible basis.

Network Resource Interconnection Service shall mean an Interconnection Service that allows the Interconnection Customer to integrate its Large Generating Facility with the Transmission Provider's Transmission System (1) in a manner comparable to that in which the Transmission Provider integrates its generating facilities to serve native load customers; or (2) in an RTO or ISO with market based congestion management, in the same manner as Network Resources. Network Resource Interconnection Service in and of itself does not convey transmission service.

Network Upgrades shall mean the additions, modifications, and upgrades to the Transmission Provider's Transmission System required at or beyond the point at which the Interconnection Facilities connect to the Transmission Provider's Transmission System to accommodate the interconnection of the Large Generating Facility to the Transmission Provider's Transmission System.

Notice of Dispute shall mean a written notice of a dispute or claim that arises out of or in connection with the Standard Large Generator Interconnection Agreement or its performance.

Optional Interconnection Study shall mean a sensitivity analysis based on assumptions specified by the Interconnection Customer in the Optional Interconnection Study Agreement.

Optional Interconnection Study Agreement shall mean the form of agreement contained in Appendix 5 of the Standard Large Generator Interconnection Procedures for conducting the Optional Interconnection Study.

Party or Parties shall mean Transmission Provider, Transmission Owner, Interconnection Customer or any combination of the above.

Point of Change of Ownership shall mean the point, as set forth in Appendix A to the Standard Large Generator Interconnection Agreement, where the Interconnection Customer's Interconnection Facilities connect to the Transmission Provider's Interconnection Facilities.

Point of Interconnection shall mean the point, as set forth in Appendix A to the Standard Large Generator Interconnection Agreement, where the Interconnection Facilities connect to the Transmission Provider's Transmission System.

Queue Position shall mean the order of a valid Interconnection Request, relative to all other pending valid Interconnection Requests, that is established based upon the date and time of receipt of the valid Interconnection Request by the Transmission Provider.

Reasonable Efforts shall mean, with respect to an action required to be attempted or taken by a Party under the Standard Large Generator Interconnection Agreement, efforts that are timely

and consistent with Good Utility Practice and are otherwise substantially equivalent to those a Party would use to protect its own interests.

Scoping Meeting shall mean the meeting between representatives of the Interconnection Customer and Transmission Provider conducted for the purpose of discussing alternative interconnection options, to exchange information including any transmission data and earlier study evaluations that would be reasonably expected to impact such interconnection options, to analyze such information, and to determine the potential feasible Points of Interconnection.

Site Control shall mean documentation reasonably demonstrating: (1) ownership of, a leasehold interest in, or a right to develop a site for the purpose of constructing the Generating Facility; (2) an option to purchase or acquire a leasehold site for such purpose; or (3) an exclusivity or other business relationship between Interconnection Customer and the entity having the right to sell, lease or grant Interconnection Customer the right to possess or occupy a site for such purpose.

Small Generating Facility shall mean a Generating Facility that has a Generating Facility Capacity of no more than 20 MW.

Stand Alone Network Upgrades shall mean Network Upgrades that an Interconnection Customer may construct without affecting day-to-day operations of the Transmission System during their construction. Both the Transmission Provider and the Interconnection Customer must agree as to what constitutes Stand Alone Network Upgrades and identify them in Appendix A to the Standard Large Generator Interconnection Agreement.

Standard Large Generator Interconnection Agreement (LGIA) shall mean the form of interconnection agreement applicable to an Interconnection Request pertaining to a Large Generating Facility that is included in the Transmission Provider's Tariff.

Standard Large Generator Interconnection Procedures (LGIP) shall mean the interconnection procedures applicable to an Interconnection Request pertaining to a Large Generating Facility that are included in the Transmission Provider's Tariff.

System Protection Facilities shall mean the equipment, including necessary protection signal communications equipment, required to protect (1) the Transmission Provider's Transmission System from faults or other electrical disturbances occurring at the Generating Facility and (2) the Generating Facility from faults or other electrical system disturbances occurring on the Transmission Provider's Transmission System or on other delivery systems or other generating systems to which the Transmission Provider's Transmission System is directly connected.

Tariff shall mean the Transmission Provider's Tariff through which open access transmission service and Interconnection Service are offered, as filed with FERC, and as amended or supplemented from time to time, or any successor tariff.

Transmission Owner shall mean an entity that owns, leases or otherwise possesses an interest in the portion of the Transmission System at the Point of Interconnection and may be a Party to the Standard Large Generator Interconnection Agreement to the extent necessary.

Transmission Provider shall mean the public utility (or its designated agent) that owns, controls, or operates transmission or distribution facilities used for the transmission of electricity

in interstate commerce and provides transmission service under the Tariff. The term Transmission Provider should be read to include the Transmission Owner when the Transmission Owner is separate from the Transmission Provider.

Transmission Provider's Interconnection Facilities shall mean all facilities and equipment owned, controlled or operated by the Transmission Provider from the Point of Change of Ownership to the Point of Interconnection as identified in Appendix A to the Standard Large Generator Interconnection Agreement, including any modifications, additions or upgrades to such facilities and equipment. Transmission Provider's Interconnection Facilities are sole use facilities and shall not include Distribution Upgrades, Stand Alone Network Upgrades or Network Upgrades.

Transmission System shall mean the facilities owned, controlled or operated by the Transmission Provider or Transmission Owner that are used to provide transmission service under the Tariff.

Trial Operation shall mean the period during which Interconnection Customer is engaged in on-site test operations and commissioning of the Generating Facility prior to Commercial Operation.

Variable Energy Resource shall mean a device for the production of electricity that is characterized by an energy source that: (1) is renewable; (2) cannot be stored by the facility owner or operator; and (3) has variability that is beyond the control of the facility owner or operator.

Article 2. Effective Date, Term, and Termination

2.1 Effective Date. This LGIA shall become effective upon execution by the Parties subject to acceptance by FERC (if applicable), or if filed unexecuted, upon the date specified by FERC. Transmission Provider shall promptly file this LGIA with FERC upon execution in accordance with Article 3.1, if required.

2.2 Term of Agreement. Subject to the provisions of Article 2.3, this LGIA shall remain in effect for a period of ten (10) years from the Effective Date or such other longer period as Interconnection Customer may request (Term to be specified in individual agreements) and shall be automatically renewed for each successive one-year period thereafter.

2.3 Termination Procedures.

2.3.1 Written Notice. This LGIA may be terminated by Interconnection Customer after giving Transmission Provider ninety (90) Calendar Days advance written notice, or by Transmission Provider notifying FERC after the Generating Facility permanently ceases Commercial Operation.

2.3.2 Default. Either Party may terminate this LGIA in accordance with Article 17.

2.3.3 Notwithstanding Articles 2.3.1 and 2.3.2, no termination shall become effective until the Parties have complied with all Applicable Laws and Regulations applicable to such termination, including the filing with FERC of a

notice of termination of this LGIA, which notice has been accepted for filing by FERC.

2.4 **Termination Costs**. If a Party elects to terminate this Agreement pursuant to Article 2.3 above, each Party shall pay all costs incurred (including any cancellation costs relating to orders or contracts for Interconnection Facilities and equipment) or charges assessed by the other Party, as of the date of the other Party's receipt of such notice of termination, that are the responsibility of the Terminating Party under this LGIA. In the event of termination by a Party, the Parties shall use commercially Reasonable Efforts to mitigate the costs, damages and charges arising as a consequence of termination. Upon termination of this LGIA, unless otherwise ordered or approved by FERC:

2.4.1 With respect to any portion of Transmission Provider's Interconnection Facilities that have not yet been constructed or installed, Transmission Provider shall to the extent possible and with Interconnection Customer's authorization cancel any pending orders of, or return, any materials or equipment for, or contracts for construction of, such facilities; provided that in the event Interconnection Customer elects not to authorize such cancellation, Interconnection Customer shall assume all payment obligations with respect to such materials, equipment, and contracts, and Transmission Provider shall deliver such material and equipment, and, if necessary, assign such contracts, to Interconnection Customer as soon as practicable, at Interconnection Customer's expense. To the extent that Interconnection Customer has already paid Transmission Provider for any or all such costs of materials or equipment not taken by Interconnection Customer, Transmission Provider shall promptly refund such amounts to Interconnection Customer, less any costs, including penalties incurred by Transmission Provider to cancel any pending orders of or return such materials, equipment, or contracts.

If an Interconnection Customer terminates this LGIA, it shall be responsible for all costs incurred in association with that Interconnection Customer's interconnection, including any cancellation costs relating to orders or contracts for Interconnection Facilities and equipment, and other expenses including any Network Upgrades for which Transmission Provider has incurred expenses and has not been reimbursed by Interconnection Customer.

2.4.2 Transmission Provider may, at its option, retain any portion of such materials, equipment, or facilities that Interconnection Customer chooses not to accept delivery of, in which case Transmission Provider shall be responsible for all costs associated with procuring such materials, equipment, or facilities.

2.4.3 With respect to any portion of the Interconnection Facilities, and any other facilities already installed or constructed pursuant to the terms of this LGIA, Interconnection Customer shall be responsible for all costs associated with the removal, relocation or other disposition or retirement of such materials, equipment, or facilities.

2.5 Disconnection. Upon termination of this LGIA, the Parties will take all appropriate steps to disconnect the Large Generating Facility from the Transmission System. All costs required to effectuate such disconnection shall be borne by the terminating Party, unless such termination resulted from the non-terminating Party's Default of this LGIA or such non-terminating Party otherwise is responsible for these costs under this LGIA.

2.6 Survival. This LGIA shall continue in effect after termination to the extent necessary to provide for final billings and payments and for costs incurred hereunder, including billings and payments pursuant to this LGIA; to permit the determination and enforcement of liability and indemnification obligations arising from acts or events that occurred while this LGIA was in effect; and to permit each Party to have access to the lands of the other Party pursuant to this LGIA or other applicable agreements, to disconnect, remove or salvage its own facilities and equipment

Article 3. Regulatory Filings

3.1 Filing. Transmission Provider shall file this LGIA (and any amendment hereto) with the appropriate Governmental Authority, if required. Interconnection Customer may request that any information so provided be subject to the confidentiality provisions of Article 22. If Interconnection Customer has executed this LGIA, or any amendment thereto, Interconnection Customer shall reasonably cooperate with Transmission Provider with respect to such filing and to provide any information reasonably requested by Transmission Provider needed to comply with applicable regulatory requirements.

Article 4. Scope of Service

4.1 Interconnection Product Options. Interconnection Customer has selected the following (checked) type of Interconnection Service:

4.1.1 Energy Resource Interconnection Service.

4.1.1.1 The Product. Energy Resource Interconnection Service allows Interconnection Customer to connect the Large Generating Facility to the Transmission System and be eligible to deliver the Large Generating Facility's output using the existing firm or non-firm capacity of the Transmission System on an "as available" basis. To the extent Interconnection Customer wants to receive Energy Resource Interconnection Service, Transmission Provider shall construct facilities identified in Attachment A.

4.1.1.2 Transmission Delivery Service Implications. Under Energy Resource Interconnection Service, Interconnection Customer will be eligible to inject power from the Large Generating Facility into and deliver power across the interconnecting Transmission Provider's Transmission System on an "as available" basis up to the amount of MWs identified in the applicable stability and steady state studies to the extent the upgrades initially required to qualify for Energy Resource Interconnection Service have been constructed. Where eligible to do so (e.g., PJM, ISO-NE, NYISO), Interconnection Customer may place a bid to sell into the market

up to the maximum identified Large Generating Facility output, subject to any conditions specified in the interconnection service approval, and the Large Generating Facility will be dispatched to the extent Interconnection Customer's bid clears. In all other instances, no transmission delivery service from the Large Generating Facility is assured, but Interconnection Customer may obtain Point-to-Point Transmission Service, Network Integration Transmission Service, or be used for secondary network transmission service, pursuant to Transmission Provider's Tariff, up to the maximum output identified in the stability and steady state studies. In those instances, in order for Interconnection Customer to obtain the right to deliver or inject energy beyond the Large Generating Facility Point of Interconnection or to improve its ability to do so, transmission delivery service must be obtained pursuant to the provisions of Transmission Provider's Tariff. The Interconnection Customer's ability to inject its Large Generating Facility output beyond the Point of Interconnection, therefore, will depend on the existing capacity of Transmission Provider's Transmission System at such time as a transmission service request is made that would accommodate such delivery. The provision of firm Point-to-Point Transmission Service or Network Integration Transmission Service may require the construction of additional Network Upgrades.

4.1.2 Network Resource Interconnection Service.

4.1.2.1 The Product. Transmission Provider must conduct the necessary studies and construct the Network Upgrades needed to integrate the Large Generating Facility (1) in a manner comparable to that in which Transmission Provider integrates its generating facilities to serve native load customers; or (2) in an ISO or RTO with market based congestion management, in the same manner as all Network Resources. To the extent Interconnection Customer wants to receive Network Resource Interconnection Service, Transmission Provider shall construct the facilities identified in Attachment A to this LGIA.

4.1.2.2 Transmission Delivery Service Implications. Network Resource Interconnection Service allows Interconnection Customer's Large Generating Facility to be designated by any Network Customer under the Tariff on Transmission Provider's Transmission System as a Network Resource, up to the Large Generating Facility's full output, on the same basis as existing Network Resources interconnected to Transmission Provider's Transmission System, and to be studied as a Network Resource on the assumption that such a designation will occur. Although Network Resource Interconnection Service does not convey a reservation of transmission service, any Network Customer under the Tariff can utilize its network service under the Tariff to obtain delivery of energy from the interconnected Interconnection

Customer's Large Generating Facility in the same manner as it accesses Network Resources. A Large Generating Facility receiving Network Resource Interconnection Service may also be used to provide Ancillary Services after technical studies and/or periodic analyses are performed with respect to the Large Generating Facility's ability to provide any applicable Ancillary Services, provided that such studies and analyses have been or would be required in connection with the provision of such Ancillary Services by any existing Network Resource. However, if an Interconnection Customer's Large Generating Facility has not been designated as a Network Resource by any load, it cannot be required to provide Ancillary Services except to the extent such requirements extend to all generating facilities that are similarly situated. The provision of Network Integration Transmission Service or firm Point-to-Point Transmission Service may require additional studies and the construction of additional upgrades. Because such studies and upgrades would be associated with a request for delivery service under the Tariff, cost responsibility for the studies and upgrades would be in accordance with FERC's policy for pricing transmission delivery services.

Network Resource Interconnection Service does not necessarily provide Interconnection Customer with the capability to physically deliver the output of its Large Generating Facility to any particular load on Transmission Provider's Transmission System without incurring congestion costs. In the event of transmission constraints on Transmission Provider's Transmission System, Interconnection Customer's Large Generating Facility shall be subject to the applicable congestion management procedures in Transmission Provider's Transmission System in the same manner as Network Resources.

There is no requirement either at the time of study or interconnection, or at any point in the future, that Interconnection Customer's Large Generating Facility be designated as a Network Resource by a Network Service Customer under the Tariff or that Interconnection Customer identify a specific buyer (or sink). To the extent a Network Customer does designate the Large Generating Facility as a Network Resource, it must do so pursuant to Transmission Provider's Tariff.

Once an Interconnection Customer satisfies the requirements for obtaining Network Resource Interconnection Service, any future transmission service request for delivery from the Large Generating Facility within Transmission Provider's Transmission System of any amount of capacity and/or energy, up to the amount initially studied, will not require that any additional studies be performed or that any further upgrades associated with such Large Generating Facility be undertaken, regardless of whether or not such Large Generating Facility is ever designated by a

Network Customer as a Network Resource and regardless of changes in ownership of the Large Generating Facility. However, the reduction or elimination of congestion or redispatch costs may require additional studies and the construction of additional upgrades.

To the extent Interconnection Customer enters into an arrangement for long term transmission service for deliveries from the Large Generating Facility outside Transmission Provider's Transmission System, such request may require additional studies and upgrades in order for Transmission Provider to grant such request.

4.2 **Provision of Service**. Transmission Provider shall provide Interconnection Service for the Large Generating Facility at the Point of Interconnection.

4.3 **Performance Standards**. Each Party shall perform all of its obligations under this LGIA in accordance with Applicable Laws and Regulations, Applicable Reliability Standards, and Good Utility Practice, and to the extent a Party is required or prevented or limited in taking any action by such regulations and standards, such Party shall not be deemed to be in Breach of this LGIA for its compliance therewith. If such Party is a Transmission Provider or Transmission Owner, then that Party shall amend the LGIA and submit the amendment to FERC for approval.

4.4 **No Transmission Delivery Service**. The execution of this LGIA does not constitute a request for, nor the provision of, any transmission delivery service under Transmission Provider's Tariff, and does not convey any right to deliver electricity to any specific customer or Point of Delivery.

4.5 **Interconnection Customer Provided Services**. The services provided by Interconnection Customer under this LGIA are set forth in Article 9.6 and Article 13.5.1. Interconnection Customer shall be paid for such services in accordance with Article 11.6.

Article 5. Interconnection Facilities Engineering, Procurement, and Construction

5.1 **Options**. Unless otherwise mutually agreed to between the Parties, Interconnection Customer shall select the In-Service Date, Initial Synchronization Date, and Commercial Operation Date; and either Standard Option or Alternate Option set forth below for completion of Transmission Provider's Interconnection Facilities and Network Upgrades as set forth in Appendix A, Interconnection Facilities and Network Upgrades, and such dates and selected option shall be set forth in Appendix B, Milestones.

5.1.1 **Standard Option**. Transmission Provider shall design, procure, and construct Transmission Provider's Interconnection Facilities and Network Upgrades, using Reasonable Efforts to complete Transmission Provider's Interconnection Facilities and Network Upgrades by the dates set forth in Appendix B, Milestones. Transmission Provider shall not be required to undertake any action which is inconsistent with its standard safety practices, its material and equipment specifications, its design criteria and construction procedures, its labor agreements, and Applicable Laws and Regulations. In

the event Transmission Provider reasonably expects that it will not be able to complete Transmission Provider's Interconnection Facilities and Network Upgrades by the specified dates, Transmission Provider shall promptly provide written notice to Interconnection Customer and shall undertake Reasonable Efforts to meet the earliest dates thereafter.

5.1.2 **Alternate Option**. If the dates designated by Interconnection Customer are acceptable to Transmission Provider, Transmission Provider shall so notify Interconnection Customer within thirty (30) Calendar Days, and shall assume responsibility for the design, procurement and construction of Transmission Provider's Interconnection Facilities by the designated dates.

If Transmission Provider subsequently fails to complete Transmission Provider's Interconnection Facilities by the In-Service Date, to the extent necessary to provide back feed power; or fails to complete Network Upgrades by the Initial Synchronization Date to the extent necessary to allow for Trial Operation at full power output, unless other arrangements are made by the Parties for such Trial Operation; or fails to complete the Network Upgrades by the Commercial Operation Date, as such dates are reflected in Appendix B, Milestones; Transmission Provider shall pay Interconnection Customer liquidated damages in accordance with Article 5.3, Liquidated Damages, provided, however, the dates designated by Interconnection Customer shall be extended day for day for each day that the applicable RTO or ISO refuses to grant clearances to install equipment.

5.1.3 **Option to Build**. If the dates designated by Interconnection Customer are not acceptable to Transmission Provider, Transmission Provider shall so notify Interconnection Customer within thirty (30) Calendar Days, and unless the Parties agree otherwise, Interconnection Customer shall have the option to assume responsibility for the design, procurement and construction of Transmission Provider's Interconnection Facilities and Stand Alone Network Upgrades on the dates specified in Article 5.1.2. Transmission Provider and Interconnection Customer must agree as to what constitutes Stand Alone Network Upgrades and identify such Stand Alone Network Upgrades in Appendix A. Except for Stand Alone Network Upgrades, Interconnection Customer shall have no right to construct Network Upgrades under this option.

5.1.4 **Negotiated Option**. If Interconnection Customer elects not to exercise its option under Article 5.1.3, Option to Build, Interconnection Customer shall so notify Transmission Provider within thirty (30) Calendar Days, and the Parties shall in good faith attempt to negotiate terms and conditions (including revision of the specified dates and liquidated damages, the provision of incentives or the procurement and construction of a portion of Transmission Provider's Interconnection Facilities and Stand Alone Network Upgrades by Interconnection Customer) pursuant to which Transmission Provider is responsible for the design, procurement and construction of Transmission Provider's Interconnection Facilities and Network Upgrades. If the Parties are unable to reach agreement on such terms and conditions, Transmission Provider shall assume responsibility for the design, procurement and

construction of Transmission Provider's Interconnection Facilities and Network Upgrades pursuant to 5.1.1, Standard Option.

5.2 General Conditions Applicable to Option to Build. If Interconnection Customer assumes responsibility for the design, procurement and construction of Transmission Provider's Interconnection Facilities and Stand Alone Network Upgrades,

(1) Interconnection Customer shall engineer, procure equipment, and construct Transmission Provider's Interconnection Facilities and Stand Alone Network Upgrades (or portions thereof) using Good Utility Practice and using standards and specifications provided in advance by Transmission Provider;

(2) Interconnection Customer's engineering, procurement and construction of Transmission Provider's Interconnection Facilities and Stand Alone Network Upgrades shall comply with all requirements of law to which Transmission Provider would be subject in the engineering, procurement or construction of Transmission Provider's Interconnection Facilities and Stand Alone Network Upgrades;

(3) Transmission Provider shall review and approve the engineering design, equipment acceptance tests, and the construction of Transmission Provider's Interconnection Facilities and Stand Alone Network Upgrades;

(4) prior to commencement of construction, Interconnection Customer shall provide to Transmission Provider a schedule for construction of Transmission Provider's Interconnection Facilities and Stand Alone Network Upgrades, and shall promptly respond to requests for information from Transmission Provider;

(5) at any time during construction, Transmission Provider shall have the right to gain unrestricted access to Transmission Provider's Interconnection Facilities and Stand Alone Network Upgrades and to conduct inspections of the same;

(6) at any time during construction, should any phase of the engineering, equipment procurement, or construction of Transmission Provider's Interconnection Facilities and Stand Alone Network Upgrades not meet the standards and specifications provided by Transmission Provider, Interconnection Customer shall be obligated to remedy deficiencies in that portion of Transmission Provider's Interconnection Facilities and Stand Alone Network Upgrades;

(7) Interconnection Customer shall indemnify Transmission Provider for claims arising from Interconnection Customer's construction of Transmission Provider's Interconnection Facilities and Stand Alone Network Upgrades under the terms and procedures applicable to Article 18.1 Indemnity;

(8) Interconnection Customer shall transfer control of Transmission Provider's Interconnection Facilities and Stand Alone Network Upgrades to Transmission Provider;

(9) Unless Parties otherwise agree, Interconnection Customer shall transfer ownership of Transmission Provider's Interconnection Facilities and Stand-Alone Network Upgrades to Transmission Provider;

(10) Transmission Provider shall approve and accept for operation and maintenance Transmission Provider's Interconnection Facilities and Stand Alone Network Upgrades to the extent engineered, procured, and constructed in accordance with this Article 5.2; and

(11) Interconnection Customer shall deliver to Transmission Provider "as-built" drawings, information, and any other documents that are reasonably required by Transmission Provider to assure that the Interconnection Facilities and Stand-Alone Network Upgrades are built to the standards and specifications required by Transmission Provider.

5.3 Liquidated Damages. The actual damages to Interconnection Customer, in the event Transmission Provider's Interconnection Facilities or Network Upgrades are not completed by the dates designated by Interconnection Customer and accepted by Transmission Provider pursuant to subparagraphs 5.1.2 or 5.1.4, above, may include Interconnection Customer's fixed operation and maintenance costs and lost opportunity costs. Such actual damages are uncertain and impossible to determine at this time. Because of such uncertainty, any liquidated damages paid by Transmission Provider to Interconnection Customer in the event that Transmission Provider does not complete any portion of Transmission Provider's Interconnection Facilities or Network Upgrades by the applicable dates, shall be an amount equal to ½ of 1 percent per day of the actual cost of Transmission Provider's Interconnection Facilities and Network Upgrades, in the aggregate, for which Transmission Provider has assumed responsibility to design, procure and construct.

However, in no event shall the total liquidated damages exceed 20 percent of the actual cost of Transmission Provider's Interconnection Facilities and Network Upgrades for which Transmission Provider has assumed responsibility to design, procure, and construct. The foregoing payments will be made by Transmission Provider to Interconnection Customer as just compensation for the damages caused to Interconnection Customer, which actual damages are uncertain and impossible to determine at this time, and as reasonable liquidated damages, but not as a penalty or a method to secure performance of this LGIA. Liquidated damages, when the Parties agree to them, are the exclusive remedy for the Transmission Provider's failure to meet its schedule.

No liquidated damages shall be paid to Interconnection Customer if: (1) Interconnection Customer is not ready to commence use of Transmission Provider's Interconnection Facilities or Network Upgrades to take the delivery of power for the Large Generating Facility's Trial Operation or to export power from the Large Generating Facility on the

specified dates, unless Interconnection Customer would have been able to commence use of Transmission Provider's Interconnection Facilities or Network Upgrades to take the delivery of power for Large Generating Facility's Trial Operation or to export power from the Large Generating Facility, but for Transmission Provider's delay; (2) Transmission Provider's failure to meet the specified dates is the result of the action or inaction of Interconnection Customer or any other Interconnection Customer who has entered into an LGIA with Transmission Provider or any cause beyond Transmission Provider's reasonable control or reasonable ability to cure; (3) the Interconnection Customer has assumed responsibility for the design, procurement and construction of Transmission Provider's Interconnection Facilities and Stand Alone Network Upgrades; or (4) the Parties have otherwise agreed.

5.4 **Power System Stabilizers**. The Interconnection Customer shall procure, install, maintain and operate Power System Stabilizers in accordance with the guidelines and procedures established by the Applicable Reliability Council. Transmission Provider reserves the right to reasonably establish minimum acceptable settings for any installed Power System Stabilizers, subject to the design and operating limitations of the Large Generating Facility. If the Large Generating Facility's Power System Stabilizers are removed from service or not capable of automatic operation, Interconnection Customer shall immediately notify Transmission Provider's system operator, or its designated representative. The requirements of this paragraph shall not apply to wind generators.

5.5 **Equipment Procurement.** If responsibility for construction of Transmission Provider's Interconnection Facilities or Network Upgrades is to be borne by Transmission Provider, then Transmission Provider shall commence design of Transmission Provider's Interconnection Facilities or Network Upgrades and procure necessary equipment as soon as practicable after all of the following conditions are satisfied, unless the Parties otherwise agree in writing:

5.5.1 Transmission Provider has completed the Facilities Study pursuant to the Facilities Study Agreement;

5.5.2 Transmission Provider has received written authorization to proceed with design and procurement from Interconnection Customer by the date specified in Appendix B, Milestones; and

5.5.3 Interconnection Customer has provided security to Transmission Provider in accordance with Article 11.5 by the dates specified in Appendix B, Milestones.

5.6 **Construction Commencement.** Transmission Provider shall commence construction of Transmission Provider's Interconnection Facilities and Network Upgrades for which it is responsible as soon as practicable after the following additional conditions are satisfied:

5.6.1 Approval of the appropriate Governmental Authority has been obtained for any facilities requiring regulatory approval;

5.6.2 Necessary real property rights and rights-of-way have been obtained, to the extent required for the construction of a discrete aspect of Transmission Provider's Interconnection Facilities and Network Upgrades;

5.6.3 Transmission Provider has received written authorization to proceed with construction from Interconnection Customer by the date specified in Appendix B, Milestones; and

5.6.4 Interconnection Customer has provided security to Transmission Provider in accordance with Article 11.5 by the dates specified in Appendix B, Milestones.

5.7 **Work Progress**. The Parties will keep each other advised periodically as to the progress of their respective design, procurement and construction efforts. Either Party may, at any time, request a progress report from the other Party. If, at any time, Interconnection Customer determines that the completion of Transmission Provider's Interconnection Facilities will not be required until after the specified In-Service Date, Interconnection Customer will provide written notice to Transmission Provider of such later date upon which the completion of Transmission Provider's Interconnection Facilities will be required.

5.8 **Information Exchange**. As soon as reasonably practicable after the Effective Date, the Parties shall exchange information regarding the design and compatibility of the Parties' Interconnection Facilities and compatibility of the Interconnection Facilities with Transmission Provider's Transmission System, and shall work diligently and in good faith to make any necessary design changes.

5.9 **Limited Operation**. If any of Transmission Provider's Interconnection Facilities or Network Upgrades are not reasonably expected to be completed prior to the Commercial Operation Date of the Large Generating Facility, Transmission Provider shall, upon the request and at the expense of Interconnection Customer, perform operating studies on a timely basis to determine the extent to which the Large Generating Facility and Interconnection Customer's Interconnection Facilities may operate prior to the completion of Transmission Provider's Interconnection Facilities or Network Upgrades consistent with Applicable Laws and Regulations, Applicable Reliability Standards, Good Utility Practice, and this LGIA. Transmission Provider shall permit Interconnection Customer to operate the Large Generating Facility and Interconnection Customer's Interconnection Facilities in accordance with the results of such studies.

5.10 **Interconnection Customer's Interconnection Facilities** ('ICIF'). Interconnection Customer shall, at its expense, design, procure, construct, own and install the ICIF, as set forth in Appendix A, Interconnection Facilities, Network Upgrades and Distribution Upgrades.

5.10.1 **Interconnection Customer's Interconnection Facility Specifications**. Interconnection Customer shall submit initial specifications for the ICIF, including System Protection Facilities, to Transmission Provider at least one hundred eighty (180) Calendar Days prior to the Initial Synchronization Date; and final specifications for review and comment at least ninety (90) Calendar Days prior to the Initial Synchronization Date. Transmission Provider shall

review such specifications to ensure that the ICIF are compatible with the technical specifications, operational control, and safety requirements of Transmission Provider and comment on such specifications within thirty (30) Calendar Days of Interconnection Customer's submission. All specifications provided hereunder shall be deemed confidential.

5.10.2 **Transmission Provider's Review**. Transmission Provider's review of Interconnection Customer's final specifications shall not be construed as confirming, endorsing, or providing a warranty as to the design, fitness, safety, durability or reliability of the Large Generating Facility, or the ICIF. Interconnection Customer shall make such changes to the ICIF as may reasonably be required by Transmission Provider, in accordance with Good Utility Practice, to ensure that the ICIF are compatible with the technical specifications, operational control, and safety requirements of Transmission Provider.

5.10.3 **ICIF Construction**. The ICIF shall be designed and constructed in accordance with Good Utility Practice. Within one hundred twenty (120) Calendar Days after the Commercial Operation Date, unless the Parties agree on another mutually acceptable deadline, Interconnection Customer shall deliver to Transmission Provider "as-built" drawings, information and documents for the ICIF, such as: a one-line diagram, a site plan showing the Large Generating Facility and the ICIF, plan and elevation drawings showing the layout of the ICIF, a relay functional diagram, relaying AC and DC schematic wiring diagrams and relay settings for all facilities associated with Interconnection Customer's step-up transformers, the facilities connecting the Large Generating Facility to the step-up transformers and the ICIF, and the impedances (determined by factory tests) for the associated step-up transformers and the Large Generating Facility. The Interconnection Customer shall provide Transmission Provider specifications for the excitation system, automatic voltage regulator, Large Generating Facility control and protection settings, transformer tap settings, and communications, if applicable.

5.11 **Transmission Provider's Interconnection Facilities Construction**. Transmission Provider's Interconnection Facilities shall be designed and constructed in accordance with Good Utility Practice. Upon request, within one hundred twenty (120) Calendar Days after the Commercial Operation Date, unless the Parties agree on another mutually acceptable deadline, Transmission Provider shall deliver to Interconnection Customer the following "as-built" drawings, information and documents for Transmission Provider's Interconnection Facilities [include appropriate drawings and relay diagrams]. Transmission Provider will obtain control of Transmission Provider's Interconnection Facilities and Stand Alone Network Upgrades upon completion of such facilities.

5.12 **Access Rights**. Upon reasonable notice and supervision by a Party, and subject to any required or necessary regulatory approvals, a Party ("Granting Party") shall furnish at no cost to the other Party ("Access Party") any rights of use, licenses, rights of way and easements with respect to lands owned or controlled by the Granting Party, its agents (if allowed under the applicable agency agreement), or any Affiliate, that are necessary to enable the Access Party to obtain ingress and egress to construct, operate, maintain,

repair, test (or witness testing), inspect, replace or remove facilities and equipment to: (i) interconnect the Large Generating Facility with the Transmission System; (ii) operate and maintain the Large Generating Facility, the Interconnection Facilities and the Transmission System; and (iii) disconnect or remove the Access Party's facilities and equipment upon termination of this LGIA. In exercising such licenses, rights of way and easements, the Access Party shall not unreasonably disrupt or interfere with normal operation of the Granting Party's business and shall adhere to the safety rules and procedures established in advance, as may be changed from time to time, by the Granting Party and provided to the Access Party.

5.13 Lands of Other Property Owners. If any part of Transmission Provider or Transmission Owner's Interconnection Facilities and/or Network Upgrades is to be installed on property owned by persons other than Interconnection Customer or Transmission Provider or Transmission Owner, Transmission Provider or Transmission Owner shall at Interconnection Customer's expense use efforts, similar in nature and extent to those that it typically undertakes on its own behalf or on behalf of its Affiliates, including use of its eminent domain authority, and to the extent consistent with state law, to procure from such persons any rights of use, licenses, rights of way and easements that are necessary to construct, operate, maintain, test, inspect, replace or remove Transmission Provider or Transmission Owner's Interconnection Facilities and/or Network Upgrades upon such property.

5.14 Permits. Transmission Provider or Transmission Owner and Interconnection Customer shall cooperate with each other in good faith in obtaining all permits, licenses, and authorizations that are necessary to accomplish the interconnection in compliance with Applicable Laws and Regulations. With respect to this paragraph, Transmission Provider or Transmission Owner shall provide permitting assistance to Interconnection Customer comparable to that provided to Transmission Provider's own, or an Affiliate's generation.

5.15 Early Construction of Base Case Facilities. Interconnection Customer may request Transmission Provider to construct, and Transmission Provider shall construct, using Reasonable Efforts to accommodate Interconnection Customer's In-Service Date, all or any portion of any Network Upgrades required for Interconnection Customer to be interconnected to the Transmission System which are included in the Base Case of the Facilities Study for Interconnection Customer, and which also are required to be constructed for another Interconnection Customer, but where such construction is not scheduled to be completed in time to achieve Interconnection Customer's In-Service Date.

5.16 Suspension. Interconnection Customer reserves the right, upon written notice to Transmission Provider, to suspend at any time all work by Transmission Provider associated with the construction and installation of Transmission Provider's Interconnection Facilities and/or Network Upgrades required under this LGIA with the condition that Transmission System shall be left in a safe and reliable condition in accordance with Good Utility Practice and Transmission Provider's safety and reliability criteria. In such event, Interconnection Customer shall be responsible for all reasonable and necessary costs which Transmission Provider (i) has incurred pursuant to this LGIA prior to the suspension and (ii) incurs in suspending such work, including any costs incurred to perform such work as may be necessary to ensure the safety of persons and

property and the integrity of the Transmission System during such suspension and, if applicable, any costs incurred in connection with the cancellation or suspension of material, equipment and labor contracts which Transmission Provider cannot reasonably avoid; provided, however, that prior to canceling or suspending any such material, equipment or labor contract, Transmission Provider shall obtain Interconnection Customer's authorization to do so.

Transmission Provider shall invoice Interconnection Customer for such costs pursuant to Article 12 and shall use due diligence to minimize its costs. In the event Interconnection Customer suspends work by Transmission Provider required under this LGIA pursuant to this Article 5.16, and has not requested Transmission Provider to recommence the work required under this LGIA on or before the expiration of three (3) years following commencement of such suspension, this LGIA shall be deemed terminated. The three-year period shall begin on the date the suspension is requested, or the date of the written notice to Transmission Provider, if no effective date is specified.

5.17 Taxes

5.17.1 Interconnection Customer Payments Not Taxable. The Parties intend that all payments or property transfers made by Interconnection Customer to Transmission Provider for the installation of Transmission Provider's Interconnection Facilities and the Network Upgrades shall be non-taxable, either as contributions to capital, or as an advance, in accordance with the Internal Revenue Code and any applicable state income tax laws and shall not be taxable as contributions in aid of construction or otherwise under the Internal Revenue Code and any applicable state income tax laws.

5.17.2 Representations and Covenants. In accordance with IRS Notice 2001-82 and IRS Notice 88-129, Interconnection Customer represents and covenants that (i) ownership of the electricity generated at the Large Generating Facility will pass to another party prior to the transmission of the electricity on the Transmission System, (ii) for income tax purposes, the amount of any payments and the cost of any property transferred to Transmission Provider for Transmission Provider's Interconnection Facilities will be capitalized by Interconnection Customer as an intangible asset and recovered using the straight-line method over a useful life of twenty (20) years, and (iii) any portion of Transmission Provider's Interconnection Facilities that is a "dual-use intertie," within the meaning of IRS Notice 88-129, is reasonably expected to carry only a de minimis amount of electricity in the direction of the Large Generating Facility. For this purpose, "de minimis amount" means no more than 5 percent of the total power flows in both directions, calculated in accordance with the "5 percent test" set forth in IRS Notice 88-129. This is not intended to be an exclusive list of the relevant conditions that must be met to conform to IRS requirements for non-taxable treatment.

At Transmission Provider's request, Interconnection Customer shall provide Transmission Provider with a report from an independent engineer confirming its representation in clause (iii), above. Transmission Provider represents and covenants that the cost of Transmission Provider's Interconnection

Facilities paid for by Interconnection Customer will have no net effect on the base upon which rates are determined.

5.17.3 Indemnification for the Cost Consequences of Current Tax Liability Imposed Upon the Transmission Provider.
Notwithstanding Article 5.17.1, Interconnection Customer shall protect, indemnify and hold harmless Transmission Provider from the cost consequences of any current tax liability imposed against Transmission Provider as the result of payments or property transfers made by Interconnection Customer to Transmission Provider under this LGIA for Interconnection Facilities, as well as any interest and penalties, other than interest and penalties attributable to any delay caused by Transmission Provider

Transmission Provider shall not include a gross-up for the cost consequences of any current tax liability in the amounts it charges Interconnection Customer under this LGIA unless (i) Transmission Provider has determined, in good faith, that the payments or property transfers made by Interconnection Customer to Transmission Provider should be reported as income subject to taxation or (ii) any Governmental Authority directs Transmission Provider to report payments or property as income subject to taxation; provided, however, that Transmission Provider may require Interconnection Customer to provide security for Interconnection Facilities, in a form reasonably acceptable to Transmission Provider (such as a parental guarantee or a letter of credit), in an amount equal to the cost consequences of any current tax liability under this Article 5.17. Interconnection Customer shall reimburse Transmission Provider for such costs on a fully grossed-up basis, in accordance with Article 5.17.4, within thirty (30) Calendar Days of receiving written notification from Transmission Provider of the amount due, including detail about how the amount was calculated.

The indemnification obligation shall terminate at the earlier of (1) the expiration of the ten year testing period and the applicable statute of limitation, as it may be extended by Transmission Provider upon request of the IRS, to keep these years open for audit or adjustment, or (2) the occurrence of a subsequent taxable event and the payment of any related indemnification obligations as contemplated by this Article 5.17

5.17.4 Tax Gross-Up Amount. Interconnection Customer's liability for the cost consequences of any current tax liability under this Article 5.17 shall be calculated on a fully grossed-up basis. Except as may otherwise be agreed to by the parties, this means that Interconnection Customer will pay Transmission Provider, in addition to the amount paid for the Interconnection Facilities and Network Upgrades, an amount equal to (1) the current taxes imposed on Transmission Provider ("Current Taxes") on the excess of (a) the gross income realized by Transmission Provider as a result of payments or property transfers made by Interconnection Customer to Transmission Provider under this LGIA (without regard to any payments under this Article 5.17) (the "Gross Income Amount") over (b) the present value of future tax deductions for depreciation that will be available as a result of such payments

or property transfers (the "Present Value Depreciation Amount"), plus (2) an additional amount sufficient to permit Transmission Provider to receive and retain, after the payment of all Current Taxes, an amount equal to the net amount described in clause (1).

For this purpose, (i) Current Taxes shall be computed based on Transmission Provider's composite federal and state tax rates at the time the payments or property transfers are received and Transmission Provider will be treated as being subject to tax at the highest marginal rates in effect at that time (the "Current Tax Rate"), and (ii) the Present Value Depreciation Amount shall be computed by discounting Transmission Provider's anticipated tax depreciation deductions as a result of such payments or property transfers by Transmission Provider's current weighted average cost of capital. Thus, the formula for calculating Interconnection Customer's liability to Transmission Owner pursuant to this Article 5.17.4 can be expressed as follows: (Current Tax Rate x (Gross Income Amount – Present Value of Tax Depreciation))/(1-Current Tax Rate). Interconnection Customer's estimated tax liability in the event taxes are imposed shall be stated in Appendix A, Interconnection Facilities, Network Upgrades and Distribution Upgrades.

5.17.5 **Private Letter Ruling or Change or Clarification of Law**. At Interconnection Customer's request and expense, Transmission Provider shall file with the IRS a request for a private letter ruling as to whether any property transferred or sums paid, or to be paid, by Interconnection Customer to Transmission Provider under this LGIA are subject to federal income taxation. Interconnection Customer will prepare the initial draft of the request for a private letter ruling, and will certify under penalties of perjury that all facts represented in such request are true and accurate to the best of Interconnection Customer's knowledge. Transmission Provider and Interconnection Customer shall cooperate in good faith with respect to the submission of such request. Transmission Provider shall keep Interconnection Customer fully informed of the status of such request for a private letter ruling and shall execute either a privacy act waiver or a limited power of attorney, in a form acceptable to the IRS that authorizes Interconnection Customer to participate in all discussions with the IRS regarding such request for a private letter ruling. Transmission Provider shall allow Interconnection Customer to attend all meetings with IRS officials about the request and shall permit Interconnection Customer to prepare the initial drafts of any follow-up letters in connection with the request.

5.17.6 **Subsequent Taxable Events.** If, within 10 years from the date on which the relevant Transmission Provider's Interconnection Facilities are placed in service, (i) Interconnection Customer Breaches the covenants contained in Article 5.17.2, (ii) a "disqualification event" occurs within the meaning of IRS Notice 88-129, or (iii) this LGIA terminates and Transmission Provider retains ownership of the Interconnection Facilities and Network Upgrades, Interconnection Customer shall pay a tax gross-up for the cost consequences of any current tax liability imposed on Transmission Provider, calculated using the methodology described in Article 5.17.4 and in accordance with IRS Notice 90-60.

5.17.7 **Contests**. In the event any Governmental Authority determines that Transmission Provider's receipt of payments or property constitutes income that is subject to taxation, Transmission Provider shall notify Interconnection Customer, in writing, within thirty (30) Calendar Days of receiving notification of such determination by a Governmental Authority. Upon the timely written request by Interconnection Customer and at Interconnection Customer's sole expense, Transmission Provider may appeal, protest, seek abatement of, or otherwise oppose such determination. Upon Interconnection Customer's written request and sole expense, Transmission Provider may file a claim for refund with respect to any taxes paid under this Article 5.17, whether or not it has received such a determination. Transmission Provider reserves the right to make all decisions with regard to the prosecution of such appeal, protest, abatement or other contest, including the selection of counsel and compromise or settlement of the claim, but Transmission Provider shall keep Interconnection Customer informed, shall consider in good faith suggestions from Interconnection Customer about the conduct of the contest, and shall reasonably permit Interconnection Customer or an Interconnection Customer representative to attend contest proceedings.

Interconnection Customer shall pay to Transmission Provider on a periodic basis, as invoiced by Transmission Provider, Transmission Provider's documented reasonable costs of prosecuting such appeal, protest, abatement or other contest. At any time during the contest, Transmission Provider may agree to a settlement either with Interconnection Customer's consent or after obtaining written advice from nationally-recognized tax counsel, selected by Transmission Provider, but reasonably acceptable to Interconnection Customer, that the proposed settlement represents a reasonable settlement given the hazards of litigation. Interconnection Customer's obligation shall be based on the amount of the settlement agreed to by Interconnection Customer, or if a higher amount, so much of the settlement that is supported by the written advice from nationally-recognized tax counsel selected under the terms of the preceding sentence. The settlement amount shall be calculated on a fully grossed-up basis to cover any related cost consequences of the current tax liability. Any settlement without Interconnection Customer's consent or such written advice will relieve Interconnection Customer from any obligation to indemnify Transmission Provider for the tax at issue in the contest.

5.17.8 **Refund**. In the event that (a) a private letter ruling is issued to Transmission Provider which holds that any amount paid or the value of any property transferred by Interconnection Customer to Transmission Provider under the terms of this LGIA is not subject to federal income taxation, (b) any legislative change or administrative announcement, notice, ruling or other determination makes it reasonably clear to Transmission Provider in good faith that any amount paid or the value of any property transferred by Interconnection Customer to Transmission Provider under the terms of this LGIA is not taxable to Transmission Provider, (c) any abatement, appeal, protest, or other contest results in a determination that any payments or transfers made by Interconnection Customer to Transmission Provider are not subject to federal

income tax, or (d) if Transmission Provider receives a refund from any taxing authority for any overpayment of tax attributable to any payment or property transfer made by Interconnection Customer to Transmission Provider pursuant to this LGIA, Transmission Provider shall promptly refund to Interconnection Customer the following:

(i) any payment made by Interconnection Customer under this Article 5.17 for taxes that is attributable to the amount determined to be non-taxable, together with interest thereon,

(ii) interest on any amount paid by Interconnection Customer to Transmission Provider for such taxes which Transmission Provider did not submit to the taxing authority, calculated in accordance with the methodology set forth in FERC's regulations at 18 CFR §35.19a(a)(2)(iii) from the date payment was made by Interconnection Customer to the date Transmission Provider refunds such payment to Interconnection Customer, and

(iii) with respect to any such taxes paid by Transmission Provider, any refund or credit Transmission Provider receives or to which it may be entitled from any Governmental Authority, interest (or that portion thereof attributable to the payment described in clause (i), above) owed to Transmission Provider for such overpayment of taxes (including any reduction in interest otherwise payable by Transmission Provider to any Governmental Authority resulting from an offset or credit); provided, however, that Transmission Provider will remit such amount promptly to Interconnection Customer only after and to the extent that Transmission Provider has received a tax refund, credit or offset from any Governmental Authority for any applicable overpayment of income tax related to Transmission Provider's Interconnection Facilities. The intent of this provision is to leave the Parties, to the extent practicable, in the event that no taxes are due with respect to any payment for Interconnection Facilities and Network Upgrades hereunder, in the same position they would have been in had no such tax payments been made.

5.17.9 **Taxes Other Than Income Taxes**. Upon the timely request by Interconnection Customer, and at Interconnection Customer's sole expense, Transmission Provider may appeal, protest, seek abatement of, or otherwise contest any tax (other than federal or state income tax) asserted or assessed against Transmission Provider for which Interconnection Customer may be required to reimburse Transmission Provider under the terms of this LGIA. Interconnection Customer shall pay to Transmission Provider on a periodic basis, as invoiced by Transmission Provider, Transmission Provider's documented reasonable costs of prosecuting such appeal, protest, abatement, or other contest. Interconnection Customer and Transmission Provider shall cooperate in good faith with respect to any such contest. Unless the payment of such taxes is a prerequisite to an appeal or abatement or cannot be deferred, no amount shall be payable by Interconnection Customer to Transmission Provider for such taxes until they are assessed by

a final, non-appealable order by any court or agency of competent jurisdiction. In the event that a tax payment is withheld and ultimately due and payable after appeal, Interconnection Customer will be responsible for all taxes, interest and penalties, other than penalties attributable to any delay caused by Transmission Provider.

5.17.10 Transmission Owners Who Are Not Transmission Providers. If Transmission Provider is not the same entity as the Transmission Owner, then (i) all references in this Article 5.17 to Transmission Provider shall be deemed also to refer to and to include the Transmission Owner, as appropriate, and (ii) this LGIA shall not become effective until such Transmission Owner shall have agreed in writing to assume all of the duties and obligations of Transmission Provider under this Article 5.17 of this LGIA.

5.18 Tax Status. Each Party shall cooperate with the other to maintain the other Party's tax status. Nothing in this LGIA is intended to adversely affect any Transmission Provider's tax exempt status with respect to the issuance of bonds including, but not limited to, Local Furnishing Bonds.

5.19 Modification.

5.19.1 General. Either Party may undertake modifications to its facilities. If a Party plans to undertake a modification that reasonably may be expected to affect the other Party's facilities, that Party shall provide to the other Party sufficient information regarding such modification so that the other Party may evaluate the potential impact of such modification prior to commencement of the work. Such information shall be deemed to be confidential hereunder and shall include information concerning the timing of such modifications and whether such modifications are expected to interrupt the flow of electricity from the Large Generating Facility. The Party desiring to perform such work shall provide the relevant drawings, plans, and specifications to the other Party at least ninety (90) Calendar Days in advance of the commencement of the work or such shorter period upon which the Parties may agree, which agreement shall not unreasonably be withheld, conditioned or delayed.

In the case of Large Generating Facility modifications that do not require Interconnection Customer to submit an Interconnection Request, Transmission Provider shall provide, within thirty (30) Calendar Days (or such other time as the Parties may agree), an estimate of any additional modifications to the Transmission System, Transmission Provider's Interconnection Facilities or Network Upgrades necessitated by such Interconnection Customer modification and a good faith estimate of the costs thereof.

5.19.2 Standards. Any additions, modifications, or replacements made to a Party's facilities shall be designed, constructed and operated in accordance with this LGIA and Good Utility Practice.

5.19.3 Modification Costs. Interconnection Customer shall not be directly assigned for the costs of any additions, modifications, or replacements that

Transmission Provider makes to Transmission Provider's Interconnection Facilities or the Transmission System to facilitate the interconnection of a third party to Transmission Provider's Interconnection Facilities or the Transmission System, or to provide transmission service to a third party under Transmission Provider's Tariff. Interconnection Customer shall be responsible for the costs of any additions, modifications, or replacements to Interconnection Customer's Interconnection Facilities that may be necessary to maintain or upgrade such Interconnection Customer's Interconnection Facilities consistent with Applicable Laws and Regulations, Applicable Reliability Standards or Good Utility Practice.

Article 6. Testing and Inspection

6.1 **Pre-Commercial Operation Date Testing and Modifications**. Prior to the Commercial Operation Date, Transmission Provider shall test Transmission Provider's Interconnection Facilities and Network Upgrades and Interconnection Customer shall test the Large Generating Facility and Interconnection Customer's Interconnection Facilities to ensure their safe and reliable operation. Similar testing may be required after initial operation. Each Party shall make any modifications to its facilities that are found to be necessary as a result of such testing. Interconnection Customer shall bear the cost of all such testing and modifications. Interconnection Customer shall generate test energy at the Large Generating Facility only if it has arranged for the delivery of such test energy.

6.2 **Post-Commercial Operation Date Testing and Modifications**. Each Party shall at its own expense perform routine inspection and testing of its facilities and equipment in accordance with Good Utility Practice as may be necessary to ensure the continued interconnection of the Large Generating Facility with the Transmission System in a safe and reliable manner. Each Party shall have the right, upon advance written notice, to require reasonable additional testing of the other Party's facilities, at the requesting Party's expense, as may be in accordance with Good Utility Practice.

6.3 **Right to Observe Testing.** Each Party shall notify the other Party in advance of its performance of tests of its Interconnection Facilities. The other Party has the right, at its own expense, to observe such testing.

6.4 **Right to Inspect**. Each Party shall have the right, but shall have no obligation to: (i) observe the other Party's tests and/or inspection of any of its System Protection Facilities and other protective equipment, including Power System Stabilizers; (ii) review the settings of the other Party's System Protection Facilities and other protective equipment; and (iii) review the other Party's maintenance records relative to the Interconnection Facilities, the System Protection Facilities and other protective equipment. A Party may exercise these rights from time to time as it deems necessary upon reasonable notice to the other Party. The exercise or non-exercise by a Party of any such rights shall not be construed as an endorsement or confirmation of any element or condition of the Interconnection Facilities or the System Protection Facilities or other protective equipment or the operation thereof, or as a warranty as to the fitness, safety, desirability, or reliability of same. Any information that a Party obtains through the exercise of any of its rights under this Article 6.4 shall be deemed to be Confidential Information and treated pursuant to Article 22 of this LGIA.

Article 7. Metering

7.1 **General**. Each Party shall comply with the Applicable Reliability Council requirements. Unless otherwise agreed by the Parties, Transmission Provider shall install Metering Equipment at the Point of Interconnection prior to any operation of the Large Generating Facility and shall own, operate, test and maintain such Metering Equipment. Power flows to and from the Large Generating Facility shall be measured at or, at Transmission Provider's option, compensated to, the Point of Interconnection. Transmission Provider shall provide metering quantities, in analog and/or digital form, to Interconnection Customer upon request. Interconnection Customer shall bear all reasonable documented costs associated with the purchase, installation, operation, testing and maintenance of the Metering Equipment.

7.2 **Check Meters**. Interconnection Customer, at its option and expense, may install and operate, on its premises and on its side of the Point of Interconnection, one or more check meters to check Transmission Provider's meters. Such check meters shall be for check purposes only and shall not be used for the measurement of power flows for purposes of this LGIA, except as provided in Article 7.4 below. The check meters shall be subject at all reasonable times to inspection and examination by Transmission Provider or its designee. The installation, operation and maintenance thereof shall be performed entirely by Interconnection Customer in accordance with Good Utility Practice.

7.3 **Standards**. Transmission Provider shall install, calibrate, and test revenue quality Metering Equipment in accordance with applicable ANSI standards.

7.4 **Testing of Metering Equipment**. Transmission Provider shall inspect and test all Transmission Provider-owned Metering Equipment upon installation and at least once every two (2) years thereafter. If requested to do so by Interconnection Customer, Transmission Provider shall, at Interconnection Customer's expense, inspect or test Metering Equipment more frequently than every two (2) years. Transmission Provider shall give reasonable notice of the time when any inspection or test shall take place, and Interconnection Customer may have representatives present at the test or inspection. If at any time Metering Equipment is found to be inaccurate or defective, it shall be adjusted, repaired or replaced at Interconnection Customer's expense, in order to provide accurate metering, unless the inaccuracy or defect is due to Transmission Provider's failure to maintain, then Transmission Provider shall pay. If Metering Equipment fails to register, or if the measurement made by Metering Equipment during a test varies by more than two percent from the measurement made by the standard meter used in the test, Transmission Provider shall adjust the measurements by correcting all measurements for the period during which Metering Equipment was in error by using Interconnection Customer's check meters, if installed. If no such check meters are installed or if the period cannot be reasonably ascertained, the adjustment shall be for the period immediately preceding the test of the Metering Equipment equal to one-half the time from the date of the last previous test of the Metering Equipment

7.5 **Metering Data.** At Interconnection Customer's expense, the metered data shall be telemetered to one or more locations designated by Transmission Provider and one or more locations designated by Interconnection Customer. Such telemetered data shall

be used, under normal operating conditions, as the official measurement of the amount of energy delivered from the Large Generating Facility to the Point of Interconnection.

Article 8. Communications

8.1 Interconnection Customer Obligations. Interconnection Customer shall maintain satisfactory operating communications with Transmission Provider's Transmission System dispatcher or representative designated by Transmission Provider. Interconnection Customer shall provide standard voice line, dedicated voice line and facsimile communications at its Large Generating Facility control room or central dispatch facility through use of either the public telephone system, or a voice communications system that does not rely on the public telephone system. Interconnection Customer shall also provide the dedicated data circuit(s) necessary to provide Interconnection Customer data to Transmission Provider as set forth in Appendix D, Security Arrangements Details. The data circuit(s) shall extend from the Large Generating Facility to the location(s) specified by Transmission Provider. Any required maintenance of such communications equipment shall be performed by Interconnection Customer. Operational communications shall be activated and maintained under, but not be limited to, the following events: system paralleling or separation, scheduled and unscheduled shutdowns, equipment clearances, and hourly and daily load data

8.2 Remote Terminal Unit. Prior to the Initial Synchronization Date of the Large Generating Facility, a Remote Terminal Unit, or equivalent data collection and transfer equipment acceptable to the Parties, shall be installed by Interconnection Customer, or by Transmission Provider at Interconnection Customer's expense, to gather accumulated and instantaneous data to be telemetered to the location(s) designated by Transmission Provider through use of a dedicated point-to-point data circuit(s) as indicated in Article 8.1. The communication protocol for the data circuit(s) shall be specified by Transmission Provider. Instantaneous bi-directional analog real power and reactive power flow information must be telemetered directly to the location(s) specified by Transmission Provider.

Each Party will promptly advise the other Party if it detects or otherwise learns of any metering, telemetry or communications equipment errors or malfunctions that require the attention and/or correction by the other Party. The Party owning such equipment shall correct such error or malfunction as soon as reasonably feasible.

8.3 No Annexation. Any and all equipment placed on the premises of a Party shall be and remain the property of the Party providing such equipment regardless of the mode and manner of annexation or attachment to real property, unless otherwise mutually agreed by the Parties.

8.4 Provision of Data from a Variable Energy Resource. The Interconnection Customer whose Generating Facility is a Variable Energy Resource shall provide meteorological and forced outage data to the Transmission Provider to the extent necessary for the Transmission Provider’s development and deployment of power production forecasts for that class of Variable Energy Resources.

The Interconnection Customer with a Variable Energy Resource having wind as the energy source, at a minimum, will be required to provide the Transmission Provider with site-specific meteorological data including: manufacturer, model, and year of all wind turbines and meteorological instrumentation, latitude, longitude and hub height at every wind turbine and meteorological tower, real-time data including turbine generation (kW), wind speed (mph), turbine availability, wind direction (in degrees relative to true north), temperature (Celsius and F), pressure (mb), air density and turbine manufacturer power curve. The information provided shall be refreshed in approximately four-ten (4-10) second intervals with regard to its generation of Renewable Energy at the Facility.

The Interconnection Customer with a Variable Energy Resource having solar as the energy source, at a minimum, will be required to provide the Transmission Provider with site-specific meteorological data including: manufacturer, model and year of all panels, inverters and meteorological instrumentation, latitude and longitude of the center of the solar panels for every inverter and every meteorological tower, real-time data including inverter generation (kW), inverter availability, direct normal solar insolation (solar intensity), temperature, barometric pressure, wind speed (mph), wind direction (degrees relative to true north) and solar panel manufacturer power curve. The information provided shall be refreshed as frequently as allowed by the SCADA System, not to exceed sixty (60) second intervals.

The Transmission Provider and Interconnection Customer whose Generating Facility is a Variable Energy Resource shall mutually agree to any additional meteorological data that are required for the development and deployment of a power production forecast. The Interconnection Customer whose Generating Facility is a Variable Energy Resource also shall submit data to the Transmission Provider regarding all forced outages to the extent necessary for the Transmission Provider's development and deployment of power production forecasts for that class of Variable Energy Resources. The exact specifications of the meteorological and forced outage data to be provided by the Interconnection Customer to the Transmission Provider including the frequency and timing of data submittals shall be made taking into account the size and configuration of the Variable Energy Resource, its characteristics, location, and its importance in maintaining generation resource adequacy and transmission system reliability in its area. All requirements for meteorological and forced outage data must be commensurate with the power production forecasting employed by the Transmission Provider. Such requirements for meteorological and forced outage data are set forth in Appendix C, Interconnection Details, of this LGIA, as they may change from time to time.

Article 9. Operations

9.1 **General**. Each Party shall comply with the Applicable Reliability Council requirements. Each Party shall provide to the other Party all information that may reasonably be required by the other Party to comply with Applicable Laws and Regulations and Applicable Reliability Standards.

9.2 **Control Area Notification**. At least three months before Initial Synchronization Date, Interconnection Customer shall notify Transmission Provider in writing of the Control Area in which the Large Generating Facility will be located. If Interconnection Customer elects to locate the Large Generating Facility in a Control Area other than the Control

Area in which the Large Generating Facility is physically located, and if permitted to do so by the relevant transmission tariffs, all necessary arrangements, including but not limited to those set forth in Article 7 and Article 8 of this LGIA, and remote Control Area generator interchange agreements, if applicable, and the appropriate measures under such agreements, shall be executed and implemented prior to the placement of the Large Generating Facility in the other Control Area.

9.3 Transmission Provider Obligations. Transmission Provider shall cause the Transmission System and Transmission Provider's Interconnection Facilities to be operated, maintained and controlled in a safe and reliable manner and in accordance with this LGIA. Transmission Provider may provide operating instructions to Interconnection Customer consistent with this LGIA and Transmission Provider's operating protocols and procedures as they may change from time to time. Transmission Provider will consider changes to its operating protocols and procedures proposed by Interconnection Customer.

9.4 Interconnection Customer Obligations. Interconnection Customer shall at its own expense operate, maintain and control the Large Generating Facility and Interconnection Customer's Interconnection Facilities in a safe and reliable manner and in accordance with this LGIA. Interconnection Customer shall operate the Large Generating Facility and Interconnection Customer's Interconnection Facilities in accordance with all applicable requirements of the Control Area of which it is part, as such requirements are set forth in Appendix C, Interconnection Details, of this LGIA. Appendix C, Interconnection Details, will be modified to reflect changes to the requirements as they may change from time to time. Either Party may request that the other Party provide copies of the requirements set forth in Appendix C, Interconnection Details, of this LGIA.

9.5 Start-Up and Synchronization. Consistent with the Parties' mutually acceptable procedures, Interconnection Customer is responsible for the proper synchronization of the Large Generating Facility to Transmission Provider's Transmission System.

9.6 Reactive Power.

9.6.1 Power Factor Design Criteria. Interconnection Customer shall design the Large Generating Facility to maintain a composite power delivery at continuous rated power output at the Point of Interconnection at a power factor within the range of 0.95 leading to 0.95 lagging, unless Transmission Provider has established different requirements that apply to all generators in the Control Area on a comparable basis. The requirements of this paragraph shall not apply to wind generators.

9.6.2 Voltage Schedules. Once Interconnection Customer has synchronized the Large Generating Facility with the Transmission System, Transmission Provider shall require Interconnection Customer to operate the Large Generating Facility to produce or absorb reactive power within the design limitations of the Large Generating Facility set forth in Article 9.6.1 (Power Factor Design Criteria). Transmission Provider's voltage schedules shall treat all sources of reactive power in the Control Area in an equitable and not unduly discriminatory manner. Transmission Provider shall exercise Reasonable Efforts to provide Interconnection Customer with such schedules

at least one (1) day in advance, and may make changes to such schedules as necessary to maintain the reliability of the Transmission System. Interconnection Customer shall operate the Large Generating Facility to maintain the specified output voltage or power factor at the Point of Interconnection within the design limitations of the Large Generating Facility set forth in Article 9.6.1 (Power Factor Design Criteria). If Interconnection Customer is unable to maintain the specified voltage or power factor, it shall promptly notify the System Operator.

9.6.2.1 **Governors and Regulators**. Whenever the Large Generating Facility is operated in parallel with the Transmission System and the speed governors (if installed on the generating unit pursuant to Good Utility Practice) and voltage regulators are capable of operation, Interconnection Customer shall operate the Large Generating Facility with its speed governors and voltage regulators in automatic operation. If the Large Generating Facility's speed governors and voltage regulators are not capable of such automatic operation, Interconnection Customer shall immediately notify Transmission Provider's system operator, or its designated representative, and ensure that such Large Generating Facility's reactive power production or absorption (measured in MVARs) are within the design capability of the Large Generating Facility's generating unit(s) and steady state stability limits. Interconnection Customer shall not cause its Large Generating Facility to disconnect automatically or instantaneously from the Transmission System or trip any generating unit comprising the Large Generating Facility for an under or over frequency condition unless the abnormal frequency condition persists for a time period beyond the limits set forth in ANSI/IEEE Standard C37.106, or such other standard as applied to other generators in the Control Area on a comparable basis.

9.6.3 **Payment for Reactive Power**. Transmission Provider is required to pay Interconnection Customer for reactive power that Interconnection Customer provides or absorbs from the Large Generating Facility when Transmission Provider requests Interconnection Customer to operate its Large Generating Facility outside the range specified in Article 9.6.1, provided that if Transmission Provider pays its own or affiliated generators for reactive power service within the specified range, it must also pay Interconnection Customer. Payments shall be pursuant to Article 11.6 or such other agreement to which the Parties have otherwise agreed.

9.7 **Outages and Interruptions**.

9.7.1 **Outages.**

9.7.1.1 **Outage Authority and Coordination**. Each Party may in accordance with Good Utility Practice in coordination with the other Party remove from service any of its respective Interconnection Facilities or Network Upgrades that may impact

the other Party's facilities as necessary to perform maintenance or testing or to install or replace equipment. Absent an Emergency Condition, the Party scheduling a removal of such facility(ies) from service will use Reasonable Efforts to schedule such removal on a date and time mutually acceptable to the Parties. In all circumstances, any Party planning to remove such facility(ies) from service shall use Reasonable Efforts to minimize the effect on the other Party of such removal.

9.7.1.2 **Outage Schedules**. Transmission Provider shall post scheduled outages of its transmission facilities on the OASIS. Interconnection Customer shall submit its planned maintenance schedules for the Large Generating Facility to Transmission Provider for a minimum of a rolling twenty-four month period. Interconnection Customer shall update its planned maintenance schedules as necessary. Transmission Provider may request Interconnection Customer to reschedule its maintenance as necessary to maintain the reliability of the Transmission System; provided, however, adequacy of generation supply shall not be a criterion in determining Transmission System reliability. Transmission Provider shall compensate Interconnection Customer for any additional direct costs that Interconnection Customer incurs as a result of having to reschedule maintenance, including any additional overtime, breaking of maintenance contracts or other costs above and beyond the cost Interconnection Customer would have incurred absent Transmission Provider's request to reschedule maintenance. Interconnection Customer will not be eligible to receive compensation, if during the twelve (12) months prior to the date of the scheduled maintenance, Interconnection Customer had modified its schedule of maintenance activities.

9.7.1.3 **Outage Restoration**. If an outage on a Party's Interconnection Facilities or Network Upgrades adversely affects the other Party's operations or facilities, the Party that owns or controls the facility that is out of service shall use Reasonable Efforts to promptly restore such facility(ies) to a normal operating condition consistent with the nature of the outage. The Party that owns or controls the facility that is out of service shall provide the other Party, to the extent such information is known, information on the nature of the Emergency Condition, an estimated time of restoration, and any corrective actions required. Initial verbal notice shall be followed up as soon as practicable with written notice explaining the nature of the outage.

9.7.2 **Interruption of Service**. If required by Good Utility Practice to do so, Transmission Provider may require Interconnection Customer to interrupt or reduce deliveries of electricity if such delivery of electricity could adversely affect Transmission Provider's ability to perform such activities as are necessary to safely and reliably operate and maintain the Transmission

System. The following provisions shall apply to any interruption or reduction permitted under this Article 9.7.2:

9.7.2.1 The interruption or reduction shall continue only for so long as reasonably necessary under Good Utility Practice

9.7.2.2 Any such interruption or reduction shall be made on an equitable, non-discriminatory basis with respect to all generating facilities directly connected to the Transmission System;

9.7.2.3 When the interruption or reduction must be made under circumstances which do not allow for advance notice, Transmission Provider shall notify Interconnection Customer by telephone as soon as practicable of the reasons for the curtailment, interruption, or reduction, and, if known, its expected duration. Telephone notification shall be followed by written notification as soon as practicable;

9.7.2.4 Except during the existence of an Emergency Condition, when the interruption or reduction can be scheduled without advance notice, Transmission Provider shall notify Interconnection Customer in advance regarding the timing of such scheduling and further notify Interconnection Customer of the expected duration. Transmission Provider shall coordinate with Interconnection Customer using Good Utility Practice to schedule the interruption or reduction during periods of least impact to Interconnection Customer and Transmission Provider;

9.7.2.5 The Parties shall cooperate and coordinate with each other to the extent necessary in order to restore the Large Generating Facility, Interconnection Facilities, and the Transmission System to their normal operating state, consistent with system conditions and Good Utility Practice.

9.7.3 **Under-Frequency and Over Frequency Conditions**. The Transmission System is designed to automatically activate a load-shed program as required by the Applicable Reliability Council in the event of an under-frequency system disturbance. Interconnection Customer shall implement under-frequency and over-frequency relay set points for the Large Generating Facility as required by the Applicable Reliability Council to ensure "ride through" capability of the Transmission System. Large Generating Facility response to frequency deviations of pre-determined magnitudes, both under-frequency and over-frequency deviations, shall be studied and coordinated with Transmission Provider in accordance with Good Utility Practice. The term "ride through" as used herein shall mean the ability of a Generating Facility to stay connected to and synchronized with the Transmission System during system disturbances within a range of under-frequency and over-frequency conditions, in accordance with Good Utility Practice

9.7.4 **System Protection and Other Control Requirements.**

9.7.4.1 **System Protection Facilities**. Interconnection Customer shall, at its expense, install, operate and maintain System Protection Facilities as a part of the Large Generating Facility or Interconnection Customer's Interconnection Facilities. Transmission Provider shall install at Interconnection Customer's expense any System Protection Facilities that may be required on Transmission Provider's Interconnection Facilities or the Transmission System as a result of the interconnection of the Large Generating Facility and Interconnection Customer's Interconnection Facilities.

9.7.4.2 Each Party's protection facilities shall be designed and coordinated with other systems in accordance with Good Utility Practice.

9.7.4.3 Each Party shall be responsible for protection of its facilities consistent with Good Utility Practice.

9.7.4.4 Each Party's protective relay design shall incorporate the necessary test switches to perform the tests required in Article 6. The required test switches will be placed such that they allow operation of lockout relays while preventing breaker failure schemes from operating and causing unnecessary breaker operations and/or the tripping of Interconnection Customer's units.

9.7.4.5 Each Party will test, operate and maintain System Protection Facilities in accordance with Good Utility Practice.

9.7.4.6 Prior to the In-Service Date, and again prior to the Commercial Operation Date, each Party or its agent shall perform a complete calibration test and functional trip test of the System Protection Facilities. At intervals suggested by Good Utility Practice and following any apparent malfunction of the System Protection Facilities, each Party shall perform both calibration and functional trip tests of its System Protection Facilities. These tests do not require the tripping of any in-service generation unit. These tests do, however, require that all protective relays and lockout contacts be activated

9.7.5 **Requirements for Protection**. In compliance with Good Utility Practice, Interconnection Customer shall provide, install, own, and maintain relays, circuit breakers and all other devices necessary to remove any fault contribution of the Large Generating Facility to any short circuit occurring on the Transmission System not otherwise isolated by Transmission Provider's equipment, such that the removal of the fault contribution shall be coordinated with the protective requirements of the Transmission System. Such protective equipment shall include, without limitation, a disconnecting device or switch with load-interrupting capability located between the Large Generating Facility and the Transmission System at a site selected upon

mutual agreement (not to be unreasonably withheld, conditioned or delayed) of the Parties. Interconnection Customer shall be responsible for protection of the Large Generating Facility and Interconnection Customer's other equipment from such conditions as negative sequence currents, over- or under-frequency, sudden load rejection, over- or under-voltage, and generator loss-of-field. Interconnection Customer shall be solely responsible to disconnect the Large Generating Facility and Interconnection Customer's other equipment if conditions on the Transmission System could adversely affect the Large Generating Facility.

9.7.6 **Power Quality**. Neither Party's facilities shall cause excessive voltage flicker nor introduce excessive distortion to the sinusoidal voltage or current waves as defined by ANSI Standard C84.1-1989, in accordance with IEEE Standard 519, or any applicable superseding electric industry standard. In the event of a conflict between ANSI Standard C84.1-1989, or any applicable superseding electric industry standard, ANSI Standard C84.1-1989, or the applicable superseding electric industry standard, shall control.

9.8 **Switching and Tagging Rules**. Each Party shall provide the other Party a copy of its switching and tagging rules that are applicable to the other Party's activities. Such switching and tagging rules shall be developed on a non-discriminatory basis. The Parties shall comply with applicable switching and tagging rules, as amended from time to time, in obtaining clearances for work or for switching operations on equipment.

9.9 **Use of Interconnection Facilities by Third Parties**.

9.9.1 **Purpose of Interconnection Facilities**. Except as may be required by Applicable Laws and Regulations, or as otherwise agreed to among the Parties, the Interconnection Facilities shall be constructed for the sole purpose of interconnecting the Large Generating Facility to the Transmission System and shall be used for no other purpose.

9.9.2 **Third Party Users**. If required by Applicable Laws and Regulations or if the Parties mutually agree, such agreement not to be unreasonably withheld, to allow one or more third parties to use Transmission Provider's Interconnection Facilities, or any part thereof, Interconnection Customer will be entitled to compensation for the capital expenses it incurred in connection with the Interconnection Facilities based upon the pro rata use of the Interconnection Facilities by Transmission Provider, all third party users, and Interconnection Customer, in accordance with Applicable Laws and Regulations or upon some other mutually-agreed upon methodology. In addition, cost responsibility for ongoing costs, including operation and maintenance costs associated with the Interconnection Facilities, will be allocated between Interconnection Customer and any third party users based upon the pro rata use of the Interconnection Facilities by Transmission Provider, all third party users, and Interconnection Customer, in accordance with Applicable Laws and Regulations or upon some other mutually agreed upon methodology. If the issue of such compensation or allocation cannot be resolved through such negotiations, it shall be submitted to FERC for resolution.

9.10 Disturbance Analysis Data Exchange. The Parties will cooperate with one another in the analysis of disturbances to either the Large Generating Facility or Transmission Provider's Transmission System by gathering and providing access to any information relating to any disturbance, including information from oscillography, protective relay targets, breaker operations and sequence of events records, and any disturbance information required by Good Utility Practice

Article 10. Maintenance.

10.1 Transmission Provider Obligations. Transmission Provider shall maintain the Transmission System and Transmission Provider's Interconnection Facilities in a safe and reliable manner and in accordance with this LGIA.

10.2 Interconnection Customer Obligations. Interconnection Customer shall maintain the Large Generating Facility and Interconnection Customer's Interconnection Facilities in a safe and reliable manner and in accordance with this LGIA.

10.3 Coordination. The Parties shall confer regularly to coordinate the planning, scheduling and performance of preventive and corrective maintenance on the Large Generating Facility and the Interconnection Facilities.

10.4 Secondary Systems. Each Party shall cooperate with the other in the inspection, maintenance, and testing of control or power circuits that operate below 600 volts, AC or DC, including, but not limited to, any hardware, control or protective devices, cables, conductors, electric raceways, secondary equipment panels, transducers, batteries, chargers, and voltage and current transformers that directly affect the operation of a Party's facilities and equipment which may reasonably be expected to impact the other Party. Each Party shall provide advance notice to the other Party before undertaking any work on such circuits, especially on electrical circuits involving circuit breaker trip and close contacts, current transformers, or potential transformers.

10.5 Operating and Maintenance Expenses. Subject to the provisions herein addressing the use of facilities by others, and except for operations and maintenance expenses associated with modifications made for providing interconnection or transmission service to a third party and such third party pays for such expenses, Interconnection Customer shall be responsible for all reasonable expenses including overheads, associated with: (1) owning, operating, maintaining, repairing, and replacing Interconnection Customer's Interconnection Facilities; and (2) operation, maintenance, repair and replacement of Transmission Provider's Interconnection Facilities.

Article 11. Performance Obligation.

11.1 Interconnection Customer Interconnection Facilities. Interconnection Customer shall design, procure, construct, install, own and/or control Interconnection Customer Interconnection Facilities described in Appendix A, Interconnection Facilities, Network Upgrades and Distribution Upgrades, at its sole expense.

11.2 Transmission Provider's Interconnection Facilities. Transmission Provider or Transmission Owner shall design, procure, construct, install, own and/or control the

Transmission Provider's Interconnection Facilities described in Appendix A, Interconnection Facilities, Network Upgrades and Distribution Upgrades, at the sole expense of the Interconnection Customer.

11.3 Network Upgrades and Distribution Upgrades. Transmission Provider or Transmission Owner shall design, procure, construct, install, and own the Network Upgrades and Distribution Upgrades described in Appendix A, Interconnection Facilities, Network Upgrades and Distribution Upgrades. The Interconnection Customer shall be responsible for all costs related to Distribution Upgrades. Unless Transmission Provider or Transmission Owner elects to fund the capital for the Network Upgrades, they shall be solely funded by Interconnection Customer.

11.4 Transmission Credits.

11.4.1 Repayment of Amounts Advanced for Network Upgrades. Interconnection Customer shall be entitled to a cash repayment, equal to the total amount paid to Transmission Provider and Affected System Operator, if any, for the Network Upgrades, including any tax gross-up or other tax-related payments associated with Network Upgrades, and not refunded to Interconnection Customer pursuant to Article 5.17.8 or otherwise, to be paid to Interconnection Customer on a dollar-for-dollar basis for the non-usage sensitive portion of transmission charges, as payments are made under Transmission Provider's Tariff and Affected System's Tariff for transmission services with respect to the Large Generating Facility. Any repayment shall include interest calculated in accordance with the methodology set forth in FERC=s regulations at 18 C.F.R. '35.19a(a)(2)(iii) from the date of any payment for Network Upgrades through the date on which the Interconnection Customer receives a repayment of such payment pursuant to this subparagraph. Interconnection Customer may assign such repayment rights to any person.

Notwithstanding the foregoing, Interconnection Customer, Transmission Provider, and Affected System Operator may adopt any alternative payment schedule that is mutually agreeable so long as Transmission Provider and Affected System Operator take one of the following actions no later than five years from the Commercial Operation Date: (1) return to Interconnection Customer any amounts advanced for Network Upgrades not previously repaid, or (2) declare in writing that Transmission Provider or Affected System Operator will continue to provide payments to Interconnection Customer on a dollar-for-dollar basis for the non-usage sensitive portion of transmission charges, or develop an alternative schedule that is mutually agreeable and provides for the return of all amounts advanced for Network Upgrades not previously repaid; however, full reimbursement shall not extend beyond twenty (20) years from the Commercial Operation Date.

If the Large Generating Facility fails to achieve commercial operation, but it or another Generating Facility is later constructed and makes use of the Network Upgrades, Transmission Provider and Affected System Operator shall at that time reimburse Interconnection Customer for the amounts advanced for the Network Upgrades. Before any such reimbursement can

occur, the Interconnection Customer, or the entity that ultimately constructs the Generating Facility, if different, is responsible for identifying the entity to which reimbursement must be made

11.4.2 **Special Provisions for Affected Systems.** Unless Transmission Provider provides, under the LGIA, for the repayment of amounts advanced to Affected System Operator for Network Upgrades, Interconnection Customer and Affected System Operator shall enter into an agreement that provides for such repayment. The agreement shall specify the terms governing payments to be made by Interconnection Customer to the Affected System Operator as well as the repayment by the Affected System Operator.

11.4.3 Notwithstanding any other provision of this LGIA, nothing herein shall be construed as relinquishing or foreclosing any rights, including but not limited to firm transmission rights, capacity rights, transmission congestion rights, or transmission credits, that Interconnection Customer, shall be entitled to, now or in the future under any other agreement or tariff as a result of, or otherwise associated with, the transmission capacity, if any, created by the Network Upgrades, including the right to obtain cash reimbursements or transmission credits for transmission service that is not associated with the Large Generating Facility.

11.5 **Provision of Security**. At least thirty (30) Calendar Days prior to the commencement of the procurement, installation, or construction of a discrete portion of a Transmission Provider's Interconnection Facilities, Network Upgrades, or Distribution Upgrades, Interconnection Customer shall provide Transmission Provider, at Interconnection Customer's option, a guarantee, a surety bond, letter of credit or other form of security that is reasonably acceptable to Transmission Provider and is consistent with the Uniform Commercial Code of the jurisdiction identified in Article 14.2.1. Such security for payment shall be in an amount sufficient to cover the costs for constructing, procuring and installing the applicable portion of Transmission Provider's Interconnection Facilities, Network Upgrades, or Distribution Upgrades and shall be reduced on a dollar-for-dollar basis for payments made to Transmission Provider for these purposes

In addition:

11.5.1 The guarantee must be made by an entity that meets the creditworthiness requirements of Transmission Provider, and contain terms and conditions that guarantee payment of any amount that may be due from Interconnection Customer, up to an agreed-to maximum amount.

11.5.2 The letter of credit must be issued by a financial institution reasonably acceptable to Transmission Provider and must specify a reasonable expiration date.

11.5.3 The surety bond must be issued by an insurer reasonably acceptable to Transmission Provider and must specify a reasonable expiration date.

11.6 **Interconnection Customer Compensation**. If Transmission Provider requests or directs Interconnection Customer to provide a service pursuant to Articles 9.6.3

(Payment for Reactive Power), or 13.5.1 of this LGIA, Transmission Provider shall compensate Interconnection Customer in accordance with Interconnection Customer's applicable rate schedule then in effect unless the provision of such service(s) is subject to an RTO or ISO FERC-approved rate schedule. Interconnection Customer shall serve Transmission Provider or RTO or ISO with any filing of a proposed rate schedule at the time of such filing with FERC. To the extent that no rate schedule is in effect at the time the Interconnection Customer is required to provide or absorb any Reactive Power under this LGIA, Transmission Provider agrees to compensate Interconnection Customer in such amount as would have been due Interconnection Customer had the rate schedule been in effect at the time service commenced; provided, however, that such rate schedule must be filed at FERC or other appropriate Governmental Authority within sixty (60) Calendar Days of the commencement of service

11.6.1 Interconnection Customer Compensation for Actions During Emergency Condition. Transmission Provider or RTO or ISO shall compensate Interconnection Customer for its provision of real and reactive power and other Emergency Condition services that Interconnection Customer provides to support the Transmission System during an Emergency Condition in accordance with Article 11.6.

Article 12. Invoice.

12.1 General. Each Party shall submit to the other Party, on a monthly basis, invoices of amounts due for the preceding month. Each invoice shall state the month to which the invoice applies and fully describe the services and equipment provided. The Parties may discharge mutual debts and payment obligations due and owing to each other on the same date through netting, in which case all amounts a Party owes to the other Party under this LGIA, including interest payments or credits, shall be netted so that only the net amount remaining due shall be paid by the owing Party.

12.2 Final Invoice. Within six months after completion of the construction of Transmission Provider's Interconnection Facilities and the Network Upgrades, Transmission Provider shall provide an invoice of the final cost of the construction of Transmission Provider's Interconnection Facilities and the Network Upgrades and shall set forth such costs in sufficient detail to enable Interconnection Customer to compare the actual costs with the estimates and to ascertain deviations, if any, from the cost estimates. Transmission Provider shall refund to Interconnection Customer any amount by which the actual payment by Interconnection Customer for estimated costs exceeds the actual costs of construction within thirty (30) Calendar Days of the issuance of such final construction invoice

12.3 Payment. Invoices shall be rendered to the paying Party at the address specified in Appendix F. The Party receiving the invoice shall pay the invoice within thirty (30) Calendar Days of receipt. All payments shall be made in immediately available funds payable to the other Party, or by wire transfer to a bank named and account designated by the invoicing Party. Payment of invoices by either Party will not constitute a waiver of any rights or claims either Party may have under this LGIA.

12.4 Disputes. In the event of a billing dispute between Transmission Provider and Interconnection Customer, Transmission Provider shall continue to provide

Interconnection Service under this LGIA as long as Interconnection Customer: (i) continues to make all payments not in dispute; and (ii) pays to Transmission Provider or into an independent escrow account the portion of the invoice in dispute, pending resolution of such dispute. If Interconnection Customer fails to meet these two requirements for continuation of service, then Transmission Provider may provide notice to Interconnection Customer of a Default pursuant to Article 17. Within thirty (30) Calendar Days after the resolution of the dispute, the Party that owes money to the other Party shall pay the amount due with interest calculated in accord with the methodology set forth in FERC's regulations at 18 CFR § 35.19a(a)(2)(iii)

Article 13. Emergencies

13.1 Definition. "Emergency Condition" shall mean a condition or situation: (i) that in the judgment of the Party making the claim is imminently likely to endanger life or property; or (ii) that, in the case of Transmission Provider, is imminently likely (as determined in a non-discriminatory manner) to cause a material adverse effect on the security of, or damage to the Transmission System, Transmission Provider's Interconnection Facilities or the Transmission Systems of others to which the Transmission System is directly connected; or (iii) that, in the case of Interconnection Customer, is imminently likely (as determined in a non-discriminatory manner) to cause a material adverse effect on the security of, or damage to, the Large Generating Facility or Interconnection Customer's Interconnection Facilities' System restoration and black start shall be considered Emergency Conditions; provided, that Interconnection Customer is not obligated by this LGIA to possess black start capability.

13.2 Obligations. Each Party shall comply with the Emergency Condition procedures of the applicable ISO/RTO, NERC, the Applicable Reliability Council, Applicable Laws and Regulations, and any emergency procedures agreed to by the Joint Operating Committee.

13.3 Notice. Transmission Provider shall notify Interconnection Customer promptly when it becomes aware of an Emergency Condition that affects Transmission Provider's Interconnection Facilities or the Transmission System that may reasonably be expected to affect Interconnection Customer's operation of the Large Generating Facility or Interconnection Customer's Interconnection Facilities. Interconnection Customer shall notify Transmission Provider promptly when it becomes aware of an Emergency Condition that affects the Large Generating Facility or Interconnection Customer's Interconnection Facilities that may reasonably be expected to affect the Transmission System or Transmission Provider's Interconnection Facilities. To the extent information is known, the notification shall describe the Emergency Condition, the extent of the damage or deficiency, the expected effect on the operation of Interconnection Customer's or Transmission Provider's facilities and operations, its anticipated duration and the corrective action taken and/or to be taken. The initial notice shall be followed as soon as practicable with written notice.

13.4 Immediate Action. Unless, in Interconnection Customer's reasonable judgment, immediate action is required, Interconnection Customer shall obtain the consent of Transmission Provider, such consent to not be unreasonably withheld, prior to performing any manual switching operations at the Large Generating Facility or Interconnection Customer's Interconnection Facilities in response to an Emergency

Condition either declared by Transmission Provider or otherwise regarding the Transmission System.

13.5 Transmission Provider Authority.

13.5.1 General. Transmission Provider may take whatever actions or inactions with regard to the Transmission System or Transmission Provider's Interconnection Facilities it deems necessary during an Emergency Condition in order to (i) preserve public health and safety, (ii) preserve the reliability of the Transmission System or Transmission Provider's Interconnection Facilities, (iii) limit or prevent damage, and (iv) expedite restoration of service.

Transmission Provider shall use Reasonable Efforts to minimize the effect of such actions or inactions on the Large Generating Facility or Interconnection Customer's Interconnection Facilities. Transmission Provider may, on the basis of technical considerations, require the Large Generating Facility to mitigate an Emergency Condition by taking actions necessary and limited in scope to remedy the Emergency Condition, including, but not limited to, directing Interconnection Customer to shut-down, start-up, increase or decrease the real or reactive power output of the Large Generating Facility; implementing a reduction or disconnection pursuant to Article 13.5.2; directing Interconnection Customer to assist with blackstart (if available) or restoration efforts; or altering the outage schedules of the Large Generating Facility and Interconnection Customer's Interconnection Facilities. Interconnection Customer shall comply with all of Transmission Provider's operating instructions concerning Large Generating Facility real power and reactive power output within the manufacturer's design limitations of the Large Generating Facility's equipment that is in service and physically available for operation at the time, in compliance with Applicable Laws and Regulations.

13.5.2 Reduction and Disconnection. Transmission Provider may reduce Interconnection Service or disconnect the Large Generating Facility or Interconnection Customer's Interconnection Facilities, when such, reduction or disconnection is necessary under Good Utility Practice due to Emergency Conditions. These rights are separate and distinct from any right of curtailment of Transmission Provider pursuant to Transmission Provider's Tariff. When Transmission Provider can schedule the reduction or disconnection in advance, Transmission Provider shall notify Interconnection Customer of the reasons, timing and expected duration of the reduction or disconnection. Transmission Provider shall coordinate with Interconnection Customer using Good Utility Practice to schedule the reduction or disconnection during periods of least impact to Interconnection Customer and Transmission Provider. Any reduction or disconnection shall continue only for so long as reasonably necessary under Good Utility Practice. The Parties shall cooperate with each other to restore the Large Generating Facility, the Interconnection Facilities, and the Transmission System to their normal operating state as soon as practicable consistent with Good Utility Practice.

13.6 Interconnection Customer Authority. Consistent with Good Utility Practice and the LGIA and the LGIP, Interconnection Customer may take actions or inactions with regard

to the Large Generating Facility or Interconnection Customer's Interconnection Facilities during an Emergency Condition in order to (i) preserve public health and safety, (ii) preserve the reliability of the Large Generating Facility or Interconnection Customer's Interconnection Facilities, (iii) limit or prevent damage, and (iv) expedite restoration of service. Interconnection Customer shall use Reasonable Efforts to minimize the effect of such actions or inactions on the Transmission System and Transmission Provider's Interconnection Facilities. Transmission Provider shall use Reasonable Efforts to assist Interconnection Customer in such actions.

13.7 Limited Liability. Except as otherwise provided in Article 11.6.1 of this LGIA, neither Party shall be liable to the other for any action it takes in responding to an Emergency Condition so long as such action is made in good faith and is consistent with Good Utility Practice.

Article 14. Regulatory Requirements and Governing Law

14.1 Regulatory Requirements. Each Party's obligations under this LGIA shall be subject to its receipt of any required approval or certificate from one or more Governmental Authorities in the form and substance satisfactory to the applying Party, or the Party making any required filings with, or providing notice to, such Governmental Authorities, and the expiration of any time period associated therewith. Each Party shall in good faith seek and use its Reasonable Efforts to obtain such other approvals. Nothing in this LGIA shall require Interconnection Customer to take any action that could result in its inability to obtain, or its loss of, status or exemption under the Federal Power Act, the Public Utility Holding Company Act of 1935, as amended, or the Public Utility Regulatory Policies Act of 1978.

14.2 Governing Law.

14.2.1 The validity, interpretation and performance of this LGIA and each of its provisions shall be governed by the laws of the state where the Point of Interconnection is located, without regard to its conflicts of law principles.

14.2.2 This LGIA is subject to all Applicable Laws and Regulations.

14.2.3 Each Party expressly reserves the right to seek changes in, appeal, or otherwise contest any laws, orders, rules, or regulations of a Governmental Authority.

Article 15. Notices

15.1 General. Unless otherwise provided in this LGIA, any notice, demand or request required or permitted to be given by either Party to the other and any instrument required or permitted to be tendered or delivered by either Party in writing to the other shall be effective when delivered and may be so given, tendered or delivered, by recognized national courier, or by depositing the same with the United States Postal Service with postage prepaid, for delivery by certified or registered mail, addressed to the Party, or personally delivered to the Party, at the address set out in Appendix F, Addresses for Delivery of Notices and Billings.

Either Party may change the notice information in this LGIA by giving five (5) Business Days written notice prior to the effective date of the change.

15.2 Billings and Payments. Billings and payments shall be sent to the addresses set out in Appendix F.

15.3 Alternative Forms of Notice. Any notice or request required or permitted to be given by a Party to the other and not required by this Agreement to be given in writing may be so given by telephone, facsimile or email to the telephone numbers and email addresses set out in Appendix F.

15.4 Operations and Maintenance Notice. Each Party shall notify the other Party in writing of the identity of the person(s) that it designates as the point(s) of contact with respect to the implementation of Articles 9 and 10

Article 16. Force Majeure

16.1 Force Majeure.

16.1.1 Economic hardship is not considered a Force Majeure event.

16.1.2 Neither Party shall be considered to be in Default with respect to any obligation hereunder, (including obligations under Article 4), other than the obligation to pay money when due, if prevented from fulfilling such obligation by Force Majeure. A Party unable to fulfill any obligation hereunder (other than an obligation to pay money when due) by reason of Force Majeure shall give notice and the full particulars of such Force Majeure to the other Party in writing or by telephone as soon as reasonably possible after the occurrence of the cause relied upon. Telephone notices given pursuant to this article shall be confirmed in writing as soon as reasonably possible and shall specifically state full particulars of the Force Majeure, the time and date when the Force Majeure occurred and when the Force Majeure is reasonably expected to cease. The Party affected shall exercise due diligence to remove such disability with reasonable dispatch, but shall not be required to accede or agree to any provision not satisfactory to it in order to settle and terminate a strike or other labor disturbance.

Article 17. Default

17.1 Default.

17.1.1 General. No Default shall exist where such failure to discharge an obligation (other than the payment of money) is the result of Force Majeure as defined in this LGIA or the result of an act of omission of the other Party. Upon a Breach, the non-breaching Party shall give written notice of such Breach to the breaching Party. Except as provided in Article 17.1.2, the breaching Party shall have thirty (30) Calendar Days from receipt of the Default notice within which to cure such Breach; provided however, if such Breach is not capable of cure within thirty (30) Calendar Days, the breaching Party shall commence such cure within thirty (30) Calendar Days after notice and

continuously and diligently complete such cure within ninety (90) Calendar Days from receipt of the Default notice; and, if cured within such time, the Breach specified in such notice shall cease to exist.

17.1.2 **Right to Terminate**. If a Breach is not cured as provided in this article, or if a Breach is not capable of being cured within the period provided for herein, the non-breaching Party shall have the right to declare a Default and terminate this LGIA by written notice at any time until cure occurs, and be relieved of any further obligation hereunder and, whether or not that Party terminates this LGIA, to recover from the breaching Party all amounts due hereunder, plus all other damages and remedies to which it is entitled at law or in equity. The provisions of this article will survive termination of this LGIA.

Article 18. Indemnity, Consequential Damages and Insurance

18.1 **Indemnity.** The Parties shall at all times indemnify, defend, and hold the other Party harmless from, any and all damages, losses, claims, including claims and actions relating to injury to or death of any person or damage to property, demand, suits, recoveries, costs and expenses, court costs, attorney fees, and all other obligations by or to third parties, arising out of or resulting from the other Party's action or inactions of its obligations under this LGIA on behalf of the Indemnifying Party, except in cases of gross negligence or intentional wrongdoing by the Indemnified Party.

18.1.1 **Indemnified Person**. If an Indemnified Person is entitled to indemnification under this Article 18 as a result of a claim by a third party, and the Indemnifying Party fails, after notice and reasonable opportunity to proceed under Article 18.1, to assume the defense of such claim, such Indemnified Person may at the expense of the Indemnifying Party contest, settle or consent to the entry of any judgment with respect to, or pay in full, such claim.

18.1.2 **Indemnifying Party**. If an Indemnifying Party is obligated to indemnify and hold any Indemnified Person harmless under this Article 18, the amount owing to the Indemnified Person shall be the amount of such Indemnified Person's actual Loss, net of any insurance or other recovery.

18.1.3 **Indemnity Procedures**. Promptly after receipt by an Indemnified Person of any claim or notice of the commencement of any action or administrative or legal proceeding or investigation as to which the indemnity provided for in Article 18.1 may apply, the Indemnified Person shall notify the Indemnifying Party of such fact. Any failure of or delay in such notification shall not affect a Party's indemnification obligation unless such failure or delay is materially prejudicial to the Indemnifying Party.

The Indemnifying Party shall have the right to assume the defense thereof with counsel designated by such Indemnifying Party and reasonably satisfactory to the Indemnified Person. If the defendants in any such action include one or more Indemnified Persons and the Indemnifying Party and if the Indemnified Person reasonably concludes that there may be legal defenses available to it and/or other Indemnified Persons which are different

from or additional to those available to the Indemnifying Party, the Indemnified Person shall have the right to select separate counsel to assert such legal defenses and to otherwise participate in the defense of such action on its own behalf. In such instances, the Indemnifying Party shall only be required to pay the fees and expenses of one additional attorney to represent an Indemnified Person or Indemnified Persons having such differing or additional legal defenses.

The Indemnified Person shall be entitled, at its expense, to participate in any such action, suit or proceeding, the defense of which has been assumed by the Indemnifying Party. Notwithstanding the foregoing, the Indemnifying Party (i) shall not be entitled to assume and control the defense of any such action, suit or proceedings if and to the extent that, in the opinion of the Indemnified Person and its counsel, such action, suit or proceeding involves the potential imposition of criminal liability on the Indemnified Person, or there exists a conflict or adversity of interest between the Indemnified Person and the Indemnifying Party, in such event the Indemnifying Party shall pay the reasonable expenses of the Indemnified Person, and (ii) shall not settle or consent to the entry of any judgment in any action, suit or proceeding without the consent of the Indemnified Person, which shall not be reasonably withheld, conditioned or delayed.

18.2 **Consequential Damages**. Other than the Liquidated Damages heretofore described, in no event shall either Party be liable under any provision of this LGIA for any losses, damages, costs or expenses for any special, indirect, incidental, consequential, or punitive damages, including but not limited to loss of profit or revenue, loss of the use of equipment, cost of capital, cost of temporary equipment or services, whether based in whole or in part in contract, in tort, including negligence, strict liability, or any other theory of liability; provided, however, that damages for which a Party may be liable to the other Party under another agreement will not be considered to be special, indirect, incidental, or consequential damages hereunder.

18.3 **Insurance**. Each party shall, at its own expense, maintain in force throughout the period of this LGIA, and until released by the other Party, the following minimum insurance coverages, with insurers authorized to do business in the state where the Point of Interconnection is located:

18.3.1 Employers' Liability and Workers' Compensation Insurance providing statutory benefits in accordance with the laws and regulations of the state in which the Point of Interconnection is located.

18.3.2 Commercial General Liability Insurance including premises and operations, personal injury, broad form property damage, broad form blanket contractual liability coverage (including coverage for the contractual indemnification) products and completed operations coverage, coverage for explosion, collapse and underground hazards, independent contractors coverage, coverage for pollution to the extent normally available and punitive damages to the extent normally available and a cross liability endorsement, with minimum limits of One Million Dollars ($1,000,000) per occurrence/One

Million Dollars ($1,000,000) aggregate combined single limit for personal injury, bodily injury, including death and property damage.

18.3.3 Comprehensive Automobile Liability Insurance for coverage of owned and non-owned and hired vehicles, trailers or semi-trailers designed for travel on public roads, with a minimum, combined single limit of One Million Dollars ($1,000,000) per occurrence for bodily injury, including death, and property damage.

18.3.4 Excess Public Liability Insurance over and above the Employers' Liability Commercial General Liability and Comprehensive Automobile Liability Insurance coverage, with a minimum combined single limit of Twenty Million Dollars ($20,000,000) per occurrence/Twenty Million Dollars ($20,000,000) aggregate.

18.3.5 The Commercial General Liability Insurance, Comprehensive Automobile Insurance and Excess Public Liability Insurance policies shall name the other Party, its parent, associated and Affiliate companies and their respective directors, officers, agents, servants and employees ("Other Party Group") as additional insured. All policies shall contain provisions whereby the insurers waive all rights of subrogation in accordance with the provisions of this LGIA against the Other Party Group and provide thirty (30) Calendar Days advance written notice to the Other Party Group prior to anniversary date of cancellation or any material change in coverage or condition.

18.3.6 The Commercial General Liability Insurance, Comprehensive Automobile Liability Insurance and Excess Public Liability Insurance policies shall contain provisions that specify that the policies are primary and shall apply to such extent without consideration for other policies separately carried and shall state that each insured is provided coverage as though a separate policy had been issued to each, except the insurer's liability shall not be increased beyond the amount for which the insurer would have been liable had only one insured been covered. Each Party shall be responsible for its respective deductibles or retentions.

18.3.7 The Commercial General Liability Insurance, Comprehensive Automobile Liability Insurance and Excess Public Liability Insurance policies, if written on a Claims First Made Basis, shall be maintained in full force and effect for two (2) years after termination of this LGIA, which coverage may be in the form of tail coverage or extended reporting period coverage if agreed by the Parties.

18.3.8 The requirements contained herein as to the types and limits of all insurance to be maintained by the Parties are not intended to and shall not in any manner, limit or qualify the liabilities and obligations assumed by the Parties under this LGIA.

18.3.9 Within ten (10) days following execution of this LGIA, and as soon as practicable after the end of each fiscal year or at the renewal of the insurance policy and in any event within ninety (90) days thereafter, each Party shall

provide certification of all insurance required in this LGIA, executed by each insurer or by an authorized representative of each insurer.

18.3.10 Notwithstanding the foregoing, each Party may self-insure to meet the minimum insurance requirements of Articles 18.3.2 through 18.3.8 to the extent it maintains a self-insurance program; provided that, such Party's senior secured debt is rated at investment grade or better by Standard & Poor's and that its self-insurance program meets the minimum insurance requirements of Articles 18.3.2 through 18.3.8. For any period of time that a Party's senior secured debt is unrated by Standard & Poor's or is rated at less than investment grade by Standard & Poor's, such Party shall comply with the insurance requirements applicable to it under Articles 18.3.2 through 18.3.9. In the event that a Party is permitted to self-insure pursuant to this article, it shall notify the other Party that it meets the requirements to self-insure and that its self-insurance program meets the minimum insurance requirements in a manner consistent with that specified in Article 18.3.9.

18.3.11 The Parties agree to report to each other in writing as soon as practical all accidents or occurrences resulting in injuries to any person, including death, and any property damage arising out of this LGIA.

Article 19. Assignment

19.1 **Assignment**. This LGIA may be assigned by either Party only with the written consent of the other; provided that either Party may assign this LGIA without the consent of the other Party to any Affiliate of the assigning Party with an equal or greater credit rating and with the legal authority and operational ability to satisfy the obligations of the assigning Party under this LGIA; and provided further that Interconnection Customer shall have the right to assign this LGIA, without the consent of Transmission Provider, for collateral security purposes to aid in providing financing for the Large Generating Facility, provided that Interconnection Customer will promptly notify Transmission Provider of any such assignment. Any financing arrangement entered into by Interconnection Customer pursuant to this article will provide that prior to or upon the exercise of the secured party's, trustee's or mortgagee's assignment rights pursuant to said arrangement, the secured creditor, the trustee or mortgagee will notify Transmission Provider of the date and particulars of any such exercise of assignment right(s), including providing the Transmission Provider with proof that it meets the requirements of Articles 11.5 and 18.3. Any attempted assignment that violates this article is void and ineffective. Any assignment under this LGIA shall not relieve a Party of its obligations, nor shall a Party's obligations be enlarged, in whole or in part, by reason thereof. Where required, consent to assignment will not be unreasonably withheld, conditioned or delayed.

Article 20. Severability

20.1 **Severability**. If any provision in this LGIA is finally determined to be invalid, void or unenforceable by any court or other Governmental Authority having jurisdiction, such determination shall not invalidate, void or make unenforceable any other provision, agreement or covenant of this LGIA; provided that if Interconnection Customer (or any third party, but only if such third party is not acting at the direction of Transmission

Provider) seeks and obtains such a final determination with respect to any provision of the Alternate Option (Article 5.1.2), or the Negotiated Option (Article 5.1.4), then none of these provisions shall thereafter have any force or effect and the Parties' rights and obligations shall be governed solely by the Standard Option (Article 5.1.1)

Article 21. Comparability

21.1 Comparability. The Parties will comply with all applicable comparability and code of conduct laws, rules and regulations, as amended from time to time.

Article 22. Confidentiality

22.1 Confidentiality. Confidential Information shall include, without limitation, all information relating to a Party's technology, research and development, business affairs, and pricing, and any information supplied by either of the Parties to the other prior to the execution of this LGIA.

Information is Confidential Information only if it is clearly designated or marked in writing as confidential on the face of the document, or, if the information is conveyed orally or by inspection, if the Party providing the information orally informs the Party receiving the information that the information is confidential.

If requested by either Party, the other Party shall provide in writing, the basis for asserting that the information referred to in this Article 22 warrants confidential treatment, and the requesting Party may disclose such writing to the appropriate Governmental Authority. Each Party shall be responsible for the costs associated with affording confidential treatment to its information.

22.1.1 Term. During the term of this LGIA, and for a period of three (3) years after the expiration or termination of this LGIA, except as otherwise provided in this Article 22, each Party shall hold in confidence and shall not disclose to any person Confidential Information.

22.1.2 Scope. Confidential Information shall not include information that the receiving Party can demonstrate: (1) is generally available to the public other than as a result of a disclosure by the receiving Party; (2) was in the lawful possession of the receiving Party on a non-confidential basis before receiving it from the disclosing Party; (3) was supplied to the receiving Party without restriction by a third party, who, to the knowledge of the receiving Party after due inquiry, was under no obligation to the disclosing Party to keep such information confidential; (4) was independently developed by the receiving Party without reference to Confidential Information of the disclosing Party; (5) is, or becomes, publicly known, through no wrongful act or omission of the receiving Party or Breach of this LGIA; or (6) is required, in accordance with Article 22.1.7 of the LGIA, Order of Disclosure, to be disclosed by any Governmental Authority or is otherwise required to be disclosed by law or subpoena, or is necessary in any legal proceeding establishing rights and obligations under this LGIA. Information designated as Confidential Information will no longer be deemed confidential if the Party that designated

the information as confidential notifies the other Party that it no longer is confidential.

22.1.3 **Release of Confidential Information**. Neither Party shall release or disclose Confidential Information to any other person, except to its Affiliates (limited by the Standards of Conduct requirements), subcontractors, employees, consultants, or to parties who may be or considering providing financing to or equity participation with Interconnection Customer, or to potential purchasers or assignees of Interconnection Customer, on a need-to-know basis in connection with this LGIA, unless such person has first been advised of the confidentiality provisions of this Article 22 and has agreed to comply with such provisions. Notwithstanding the foregoing, a Party providing Confidential Information to any person shall remain primarily responsible for any release of Confidential Information in contravention of this Article 22.

22.1.4 **Rights**. Each Party retains all rights, title, and interest in the Confidential Information that each Party discloses to the other Party. The disclosure by each Party to the other Party of Confidential Information shall not be deemed a waiver by either Party or any other person or entity of the right to protect the Confidential Information from public disclosure.

22.1.5 **No Warranties**. By providing Confidential Information, neither Party makes any warranties or representations as to its accuracy or completeness. In addition, by supplying Confidential Information, neither Party obligates itself to provide any particular information or Confidential Information to the other Party nor to enter into any further agreements or proceed with any other relationship or joint venture.

22.1.6 **Standard of Care**. Each Party shall use at least the same standard of care to protect Confidential Information it receives as it uses to protect its own Confidential Information from unauthorized disclosure, publication or dissemination. Each Party may use Confidential Information solely to fulfill its obligations to the other Party under this LGIA or its regulatory requirements.

22.1.7 **Order of Disclosure**. If a court or a Government Authority or entity with the right, power, and apparent authority to do so requests or requires either Party, by subpoena, oral deposition, interrogatories, requests for production of documents, administrative order, or otherwise, to disclose Confidential Information, that Party shall provide the other Party with prompt notice of such request(s) or requirement(s) so that the other Party may seek an appropriate protective order or waive compliance with the terms of this LGIA. Notwithstanding the absence of a protective order or waiver, the Party may disclose such Confidential Information which, in the opinion of its counsel, the Party is legally compelled to disclose. Each Party will use Reasonable Efforts to obtain reliable assurance that confidential treatment will be accorded any Confidential Information so furnished.

22.1.8 **Termination of Agreement**. Upon termination of this LGIA for any reason, each Party shall, within ten (10) Calendar Days of receipt of a written request

from the other Party, use Reasonable Efforts to destroy, erase, or delete (with such destruction, erasure, and deletion certified in writing to the other Party) or return to the other Party, without retaining copies thereof, any and all written or electronic Confidential Information received from the other Party.

22.1.9 **Remedies**. The Parties agree that monetary damages would be inadequate to compensate a Party for the other Party's Breach of its obligations under this Article 22. Each Party accordingly agrees that the other Party shall be entitled to equitable relief, by way of injunction or otherwise, if the first Party Breaches or threatens to Breach its obligations under this Article 22, which equitable relief shall be granted without bond or proof of damages, and the receiving Party shall not plead in defense that there would be an adequate remedy at law. Such remedy shall not be deemed an exclusive remedy for the Breach of this Article 22, but shall be in addition to all other remedies available at law or in equity. The Parties further acknowledge and agree that the covenants contained herein are necessary for the protection of legitimate business interests and are reasonable in scope. No Party, however, shall be liable for indirect, incidental, or consequential or punitive damages of any nature or kind resulting from or arising in connection with this Article 22.

22.1.10 **Disclosure to FERC, its Staff, or a State**. Notwithstanding anything in this Article 22 to the contrary, and pursuant to 18 CFR section 1b.20, if FERC or its staff, during the course of an investigation or otherwise, requests information from one of the Parties that is otherwise required to be maintained in confidence pursuant to this LGIA, the Party shall provide the requested information to FERC or its staff, within the time provided for in the request for information. In providing the information to FERC or its staff, the Party must, consistent with 18 CFR section 388.112, request that the information be treated as confidential and non-public by FERC and its staff and that the information be withheld from public disclosure. Parties are prohibited from notifying the other Party to this LGIA prior to the release of the Confidential Information to FERC or its staff. The Party shall notify the other Party to the LGIA when it is notified by FERC or its staff that a request to release Confidential Information has been received by FERC, at which time either of the Parties may respond before such information would be made public, pursuant to 18 CFR section 388.112. Requests from a state regulatory body conducting a confidential investigation shall be treated in a similar manner if consistent with the applicable state rules and regulations.

22.1.11 Subject to the exception in Article 22.1.10, any information that a Party claims is competitively sensitive, commercial or financial information under this LGIA ("Confidential Information") shall not be disclosed by the other Party to any person not employed or retained by the other Party, except to the extent disclosure is (i) required by law; (ii) reasonably deemed by the disclosing Party to be required to be disclosed in connection with a dispute between or among the Parties, or the defense of litigation or dispute; (iii) otherwise permitted by consent of the other Party, such consent not to be unreasonably withheld; or (iv) necessary to fulfill its obligations under this LGIA or as a transmission service provider or a Control Area operator including disclosing the Confidential Information to an RTO or ISO or to a regional or national

reliability organization. The Party asserting confidentiality shall notify the other Party in writing of the information it claims is confidential. Prior to any disclosures of the other Party's Confidential Information under this subparagraph, or if any third party or Governmental Authority makes any request or demand for any of the information described in this subparagraph, the disclosing Party agrees to promptly notify the other Party in writing and agrees to assert confidentiality and cooperate with the other Party in seeking to protect the Confidential Information from public disclosure by confidentiality agreement, protective order or other reasonable measures.

Article 23. Environmental Releases

23.1 Each Party shall notify the other Party, first orally and then in writing, of the release of any Hazardous Substances, any asbestos or lead abatement activities, or any type of remediation activities related to the Large Generating Facility or the Interconnection Facilities, each of which may reasonably be expected to affect the other Party. The notifying Party shall: (i) provide the notice as soon as practicable, provided such Party makes a good faith effort to provide the notice no later than twenty-four hours after such Party becomes aware of the occurrence; and (ii) promptly furnish to the other Party copies of any publicly available reports filed with any Governmental Authorities addressing such events

Article 24. Information Requirements

24.1 **Information Acquisition.** Transmission Provider and Interconnection Customer shall submit specific information regarding the electrical characteristics of their respective facilities to each other as described below and in accordance with Applicable Reliability Standards.

24.2 **Information Submission by Transmission Provider**. The initial information submission by Transmission Provider shall occur no later than one hundred eighty (180) Calendar Days prior to Trial Operation and shall include Transmission System information necessary to allow Interconnection Customer to select equipment and meet any system protection and stability requirements, unless otherwise agreed to by the Parties. On a monthly basis Transmission Provider shall provide Interconnection Customer a status report on the construction and installation of Transmission Provider's Interconnection Facilities and Network Upgrades, including, but not limited to, the following information: (1) progress to date; (2) a description of the activities since the last report (3) a description of the action items for the next period; and (4) the delivery status of equipment ordered.

24.3 **Updated Information Submission by Interconnection Customer**. The updated information submission by Interconnection Customer, including manufacturer information, shall occur no later than one hundred eighty (180) Calendar Days prior to the Trial Operation. Interconnection Customer shall submit a completed copy of the Large Generating Facility data requirements contained in Appendix 1 to the LGIP. It shall also include any additional information provided to Transmission Provider for the Feasibility and Facilities Study. Information in this submission shall be the most current Large Generating Facility design or expected performance data. Information submitted for stability models shall be compatible with Transmission Provider standard models. If

there is no compatible model, Interconnection Customer will work with a consultant mutually agreed to by the Parties to develop and supply a standard model and associated information.

If Interconnection Customer's data is materially different from what was originally provided to Transmission Provider pursuant to the Interconnection Study Agreement between Transmission Provider and Interconnection Customer, then Transmission Provider will conduct appropriate studies to determine the impact on Transmission Provider Transmission System based on the actual data submitted pursuant to this Article 24.3. The Interconnection Customer shall not begin Trial Operation until such studies are completed.

24.4 Information Supplementation. Prior to the Operation Date, the Parties shall supplement their information submissions described above in this Article 24 with any and all "as-built" Large Generating Facility information or "as-tested" performance information that differs from the initial submissions or, alternatively, written confirmation that no such differences exist. The Interconnection Customer shall conduct tests on the Large Generating Facility as required by Good Utility Practice such as an open circuit "step voltage" test on the Large Generating Facility to verify proper operation of the Large Generating Facility's automatic voltage regulator.

Unless otherwise agreed, the test conditions shall include: (1) Large Generating Facility at synchronous speed; (2) automatic voltage regulator on and in voltage control mode; and (3) a five percent change in Large Generating Facility terminal voltage initiated by a change in the voltage regulators reference voltage. Interconnection Customer shall provide validated test recordings showing the responses of Large Generating Facility terminal and field voltages. In the event that direct recordings of these voltages is impractical, recordings of other voltages or currents that mirror the response of the Large Generating Facility's terminal or field voltage are acceptable if information necessary to translate these alternate quantities to actual Large Generating Facility terminal or field voltages is provided. Large Generating Facility testing shall be conducted and results provided to Transmission Provider for each individual generating unit in a station.

Subsequent to the Operation Date, Interconnection Customer shall provide Transmission Provider any information changes due to equipment replacement, repair, or adjustment. Transmission Provider shall provide Interconnection Customer any information changes due to equipment replacement, repair or adjustment in the directly connected substation or any adjacent Transmission Provider-owned substation that may affect Interconnection Customer's Interconnection Facilities equipment ratings, protection or operating requirements. The Parties shall provide such information no later than thirty (30) Calendar Days after the date of the equipment replacement, repair or adjustment.

Article 25. Information Access and Audit Rights

25.1 Information Access. Each Party (the "disclosing Party") shall make available to the other Party information that is in the possession of the disclosing Party and is necessary in order for the other Party to: (i) verify the costs incurred by the disclosing Party for which the other Party is responsible under this LGIA; and (ii) carry out its obligations and

responsibilities under this LGIA. The Parties shall not use such information for purposes other than those set forth in this Article 25.1 and to enforce their rights under this LGIA.

25.2 Reporting of Non-Force Majeure Events. Each Party (the "notifying Party") shall notify the other Party when the notifying Party becomes aware of its inability to comply with the provisions of this LGIA for a reason other than a Force Majeure event. The Parties agree to cooperate with each other and provide necessary information regarding such inability to comply, including the date, duration, reason for the inability to comply, and corrective actions taken or planned to be taken with respect to such inability to comply. Notwithstanding the foregoing, notification, cooperation or information provided under this article shall not entitle the Party receiving such notification to allege a cause for anticipatory breach of this LGIA.

25.3 Audit Rights. Subject to the requirements of confidentiality under Article 22 of this LGIA, each Party shall have the right, during normal business hours, and upon prior reasonable notice to the other Party, to audit at its own expense the other Party's accounts and records pertaining to either Party's performance or either Party's satisfaction of obligations under this LGIA. Such audit rights shall include audits of the other Party's costs, calculation of invoiced amounts, Transmission Provider's efforts to allocate responsibility for the provision of reactive support to the Transmission System, Transmission Provider's efforts to allocate responsibility for interruption or reduction of generation on the Transmission System, and each Party's actions in an Emergency Condition. Any audit authorized by this article shall be performed at the offices where such accounts and records are maintained and shall be limited to those portions of such accounts and records that relate to each Party's performance and satisfaction of obligations under this LGIA. Each Party shall keep such accounts and records for a period equivalent to the audit rights periods described in Article 25.4.

25.4 Audit Rights Periods.

25.4.1 Audit Rights Period for Construction-Related Accounts and Records. Accounts and records related to the design, engineering, procurement, and construction of Transmission Provider's Interconnection Facilities and Network Upgrades shall be subject to audit for a period of twenty-four months following Transmission Provider's issuance of a final invoice in accordance with Article 12.2.

25.4.2 Audit Rights Period for All Other Accounts and Records. Accounts and records related to either Party's performance or satisfaction of all obligations under this LGIA other than those described in Article 25.4.1 shall be subject to audit as follows: (i) for an audit relating to cost obligations, the applicable audit rights period shall be twenty-four months after the auditing Party's receipt of an invoice giving rise to such cost obligations; and (ii) for an audit relating to all other obligations, the applicable audit rights period shall be twenty-four months after the event for which the audit is sought.

25.5 Audit Results. If an audit by a Party determines that an overpayment or an underpayment has occurred, a notice of such overpayment or underpayment shall be given to the other Party together with those records from the audit which support such determination.

Article 26. Subcontractors

26.1 General. Nothing in this LGIA shall prevent a Party from utilizing the services of any subcontractor as it deems appropriate to perform its obligations under this LGIA; provided, however, that each Party shall require its subcontractors to comply with all applicable terms and conditions of this LGIA in providing such services and each Party shall remain primarily liable to the other Party for the performance of such subcontractor.

26.2 Responsibility of Principal. The creation of any subcontract relationship shall not relieve the hiring Party of any of its obligations under this LGIA. The hiring Party shall be fully responsible to the other Party for the acts or omissions of any subcontractor the hiring Party hires as if no subcontract had been made; provided, however, that in no event shall Transmission Provider be liable for the actions or inactions of Interconnection Customer or its subcontractors with respect to obligations of Interconnection Customer under Article 5 of this LGIA. Any applicable obligation imposed by this LGIA upon the hiring Party shall be equally binding upon, and shall be construed as having application to, any subcontractor of such Party.

26.3 No Limitation by Insurance. The obligations under this Article 26 will not be limited in any way by any limitation of subcontractor's insurance.

Article 27. Disputes

27.1 Submission. In the event either Party has a dispute, or asserts a claim, that arises out of or in connection with this LGIA or its performance, such Party (the "disputing Party") shall provide the other Party with written notice of the dispute or claim ("Notice of Dispute"). Such dispute or claim shall be referred to a designated senior representative of each Party for resolution on an informal basis as promptly as practicable after receipt of the Notice of Dispute by the other Party. In the event the designated representatives are unable to resolve the claim or dispute through unassisted or assisted negotiations within thirty (30) Calendar Days of the other Party's receipt of the Notice of Dispute, such claim or dispute may, upon mutual agreement of the Parties, be submitted to arbitration and resolved in accordance with the arbitration procedures set forth below. In the event the Parties do not agree to submit such claim or dispute to arbitration, each Party may exercise whatever rights and remedies it may have in equity or at law consistent with the terms of this LGIA.

27.2 External Arbitration Procedures. Any arbitration initiated under this LGIA shall be conducted before a single neutral arbitrator appointed by the Parties. If the Parties fail to agree upon a single arbitrator within ten (10) Calendar Days of the submission of the dispute to arbitration, each Party shall choose one arbitrator who shall sit on a three-member arbitration panel. The two arbitrators so chosen shall within twenty (20) Calendar Days select a third arbitrator to chair the arbitration panel. In either case, the arbitrators shall be knowledgeable in electric utility matters, including electric transmission and bulk power issues, and shall not have any current or past substantial business or financial relationships with any party to the arbitration (except prior arbitration). The arbitrator(s) shall provide each of the Parties an opportunity to be heard and, except as otherwise provided herein, shall conduct the arbitration in accordance with the Commercial Arbitration Rules of the American Arbitration Association

("Arbitration Rules") and any applicable FERC regulations or RTO rules; provided, however, in the event of a conflict between the Arbitration Rules and the terms of this Article 27, the terms of this Article 27 shall prevail.

27.3 **Arbitration Decisions**. Unless otherwise agreed by the Parties, the arbitrator(s) shall render a decision within ninety (90) Calendar Days of appointment and shall notify the Parties in writing of such decision and the reasons therefor. The arbitrator(s) shall be authorized only to interpret and apply the provisions of this LGIA and shall have no power to modify or change any provision of this Agreement in any manner. The decision of the arbitrator(s) shall be final and binding upon the Parties, and judgment on the award may be entered in any court having jurisdiction. The decision of the arbitrator(s) may be appealed solely on the grounds that the conduct of the arbitrator(s), or the decision itself, violated the standards set forth in the Federal Arbitration Act or the Administrative Dispute Resolution Act. The final decision of the arbitrator must also be filed with FERC if it affects jurisdictional rates, terms and conditions of service, Interconnection Facilities, or Network Upgrades.

27.4 **Costs**. Each Party shall be responsible for its own costs incurred during the arbitration process and for the following costs, if applicable: (1) the cost of the arbitrator chosen by the Party to sit on the three member panel and one half of the cost of the third arbitrator chosen; or (2) one half the cost of the single arbitrator jointly chosen by the Parties.

Article 28. Representations, Warranties, and Covenants

28.1 **General**. Each Party makes the following representations, warranties and covenants:

28.1.1 **Good Standing**. Such Party is duly organized, validly existing and in good standing under the laws of the state in which it is organized, formed, or incorporated, as applicable; that it is qualified to do business in the state or states in which the Large Generating Facility, Interconnection Facilities and Network Upgrades owned by such Party, as applicable, are located; and that it has the corporate power and authority to own its properties, to carry on its business as now being conducted and to enter into this LGIA and carry out the transactions contemplated hereby and perform and carry out all covenants and obligations on its part to be performed under and pursuant to this LGIA.

28.1.2 **Authority**. Such Party has the right, power and authority to enter into this LGIA, to become a Party hereto and to perform its obligations hereunder. This LGIA is a legal, valid and binding obligation of such Party, enforceable against such Party in accordance with its terms, except as the enforceability thereof may be limited by applicable bankruptcy, insolvency, reorganization or other similar laws affecting creditors' rights generally and by general equitable principles (regardless of whether enforceability is sought in a proceeding in equity or at law).

28.1.3 **No Conflict**. The execution, delivery and performance of this LGIA does not violate or conflict with the organizational or formation documents, or bylaws or operating agreement, of such Party, or any judgment, license, permit,

order, material agreement or instrument applicable to or binding upon such Party or any of its assets.

28.1.4 **Consent and Approval**. Such Party has sought or obtained, or, in accordance with this LGIA will seek or obtain, each consent, approval, authorization, order, or acceptance by any Governmental Authority in connection with the execution, delivery and performance of this LGIA, and it will provide to any Governmental Authority notice of any actions under this LGIA that are required by Applicable Laws and Regulations

Article 29. Joint Operating Committee

29.1 **Joint Operating Committee**. Except in the case of ISOs and RTOs, Transmission Provider shall constitute a Joint Operating Committee to coordinate operating and technical considerations of Interconnection Service. At least six (6) months prior to the expected Initial Synchronization Date, Interconnection Customer and Transmission Provider shall each appoint one representative and one alternate to the Joint Operating Committee. Each Interconnection Customer shall notify Transmission Provider of its appointment in writing. Such appointments may be changed at any time by similar notice. The Joint Operating Committee shall meet as necessary, but not less than once each calendar year, to carry out the duties set forth herein. The Joint Operating Committee shall hold a meeting at the request of either Party, at a time and place agreed upon by the representatives. The Joint Operating Committee shall perform all of its duties consistent with the provisions of this LGIA. Each Party shall cooperate in providing to the Joint Operating Committee all information required in the performance of the Joint Operating Committee's duties. All decisions and agreements, if any, made by the Joint Operating Committee, shall be evidenced in writing. The duties of the Joint Operating Committee shall include the following:

29.1.1 Establish data requirements and operating record requirements.

29.1.2 Review the requirements, standards, and procedures for data acquisition equipment, protective equipment, and any other equipment or software.

29.1.3 Annually review the one (1) year forecast of maintenance and planned outage schedules of Transmission Provider's and Interconnection Customer's facilities at the Point of Interconnection.

29.1.4 Coordinate the scheduling of maintenance and planned outages on the Interconnection Facilities, the Large Generating Facility and other facilities that impact the normal operation of the interconnection of the Large Generating Facility to the Transmission System.

29.1.5 Ensure that information is being provided by each Party regarding equipment availability.

29.1.6 Perform such other duties as may be conferred upon it by mutual agreement of the Parties.

Article 30. Miscellaneous

30.1 Binding Effect. This LGIA and the rights and obligations hereof, shall be binding upon and shall inure to the benefit of the successors and assigns of the Parties hereto.

30.2 Conflicts. In the event of a conflict between the body of this LGIA and any attachment, appendices or exhibits hereto, the terms and provisions of the body of this LGIA shall prevail and be deemed the final intent of the Parties.

30.3 Rules of Interpretation. This LGIA, unless a clear contrary intention appears, shall be construed and interpreted as follows: (1) the singular number includes the plural number and vice versa; (2) reference to any person includes such person's successors and assigns but, in the case of a Party, only if such successors and assigns are permitted by this LGIA, and reference to a person in a particular capacity excludes such person in any other capacity or individually; (3) reference to any agreement (including this LGIA), document, instrument or tariff means such agreement, document, instrument, or tariff as amended or modified and in effect from time to time in accordance with the terms thereof and, if applicable, the terms hereof; (4) reference to any Applicable Laws and Regulations means such Applicable Laws and Regulations as amended, modified, codified, or reenacted, in whole or in part, and in effect from time to time, including, if applicable, rules and regulations promulgated thereunder; (5) unless expressly stated otherwise, reference to any Article, Section or Appendix means such Article of this LGIA or such Appendix to this LGIA, or such Section to the LGIP or such Appendix to the LGIP, as the case may be; (6) "hereunder", "hereof", "herein", "hereto" and words of similar import shall be deemed references to this LGIA as a whole and not to any particular Article or other provision hereof or thereof; (7) "including" (and with correlative meaning "include") means including without limiting the generality of any description preceding such term; and (8) relative to the determination of any period of time, "from" means "from and including", "to" means "to but excluding" and "through" means "through and including".

30.4 Entire Agreement. This LGIA, including all Appendices and Schedules attached hereto, constitutes the entire agreement between the Parties with reference to the subject matter hereof, and supersedes all prior and contemporaneous understandings or agreements, oral or written, between the Parties with respect to the subject matter of this LGIA. There are no other agreements, representations, warranties, or covenants which constitute any part of the consideration for, or any condition to, either Party's compliance with its obligations under this LGIA.

30.5 No Third Party Beneficiaries. This LGIA is not intended to and does not create rights, remedies, or benefits of any character whatsoever in favor of any persons, corporations, associations, or entities other than the Parties, and the obligations herein assumed are solely for the use and benefit of the Parties, their successors in interest and, where permitted, their assigns.

30.6 Waiver. The failure of a Party to this LGIA to insist, on any occasion, upon strict performance of any provision of this LGIA will not be considered a waiver of any obligation, right, or duty of, or imposed upon, such Party.

Any waiver at any time by either Party of its rights with respect to this LGIA shall not be deemed a continuing waiver or a waiver with respect to any other failure to comply with

any other obligation, right, duty of this LGIA. Termination or Default of this LGIA for any reason by Interconnection Customer shall not constitute a waiver of Interconnection Customer's legal rights to obtain an interconnection from Transmission Provider. Any waiver of this LGIA shall, if requested, be provided in writing.

30.7 Headings. The descriptive headings of the various Articles of this LGIA have been inserted for convenience of reference only and are of no significance in the interpretation or construction of this LGIA.

30.8 Multiple Counterparts. This LGIA may be executed in two or more counterparts, each of which is deemed an original but all constitute one and the same instrument.

30.9 Amendment. The Parties may by mutual agreement amend this LGIA by a written instrument duly executed by the Parties.

30.10 Modification by the Parties. The Parties may by mutual agreement amend the Appendices to this LGIA by a written instrument duly executed by the Parties. Such amendment shall become effective and a part of this LGIA upon satisfaction of all Applicable Laws and Regulations.

30.11 Reservation of Rights. Transmission Provider shall have the right to make a unilateral filing with FERC to modify this LGIA with respect to any rates, terms and conditions, charges, classifications of service, rule or regulation under section 205 or any other applicable provision of the Federal Power Act and FERC's rules and regulations thereunder, and Interconnection Customer shall have the right to make a unilateral filing with FERC to modify this LGIA pursuant to section 206 or any other applicable provision of the Federal Power Act and FERC's rules and regulations thereunder; provided that each Party shall have the right to protest any such filing by the other Party and to participate fully in any proceeding before FERC in which such modifications may be considered. Nothing in this LGIA shall limit the rights of the Parties or of FERC under sections 205 or 206 of the Federal Power Act and FERC's rules and regulations thereunder, except to the extent that the Parties otherwise mutually agree as provided herein.

30.12 No Partnership. This LGIA shall not be interpreted or construed to create an association, joint venture, agency relationship, or partnership between the Parties or to impose any partnership obligation or partnership liability upon either Party. Neither Party shall have any right, power or authority to enter into any agreement or undertaking for, or act on behalf of, or to act as or be an agent or representative of, or to otherwise bind, the other Party.

IN WITNESS WHEREOF, the Parties have executed this LGIA in duplicate originals, each of which shall constitute and be an original effective Agreement between the Parties.

[Insert name of Transmission Provider or Transmission Owner, if applicable]

By: _____ By: _____

Title: _____Title: _____

Date: _____ Date: _____

[Insert name of Interconnection Customer]

By: _____

Title: _____

Date: _____

Appendix A to LGIA

Interconnection Facilities, Network Upgrades and Distribution Upgrades

1. Interconnection Facilities:

(a) [insert Interconnection Customer's Interconnection Facilities]:

(b) [insert Transmission Provider's Interconnection Facilities]:

2. Network Upgrades:

(a) [insert Stand Alone Network Upgrades]:

(b) [insert Other Network Upgrades]:

3. Distribution Upgrades:

Appendix B to LGIA

Milestones

Appendix C to LGIA

Interconnection Details

Appendix D to LGIA

Security Arrangements Details

Infrastructure security of Transmission System equipment and operations and control hardware and software is essential to ensure day-to-day Transmission System reliability and operational security. FERC will expect all Transmission Providers, market participants, and Interconnection Customers interconnected to the Transmission System to comply with the recommendations offered by the President's Critical Infrastructure Protection Board and, eventually, best practice recommendations from the electric reliability authority. All public utilities will be expected to meet basic standards for system infrastructure and operational security, including physical, operational, and cyber-security practices.

Appendix E to LGIA

Commercial Operation Date

This Appendix E is a part of the LGIA between Transmission Provider and Interconnection Customer.

[Date]

[Transmission Provider Address]

Re: _____ Large Generating Facility

Dear: _____

On **[Date] [Interconnection Customer]** has completed Trial Operation of Unit No. ___. This letter confirms that [Interconnection Customer] commenced Commercial Operation of Unit No. ___ at the Large Generating Facility, effective as of [Date plus one day].

Thank you.

[Signature]

[Interconnection Customer Representative]

Appendix F to LGIA

Addresses for Delivery of Notices and Billings

Notices:.

Transmission Provider:

[To be supplied.]

Interconnection Customer:

[To be supplied.]

Billings and Payments:

Transmission Provider:

[To be supplied.]

Interconnection Customer:

[To be supplied.]

Alternative Forms of Delivery of Notices (telephone, facsimile or email):

Transmission Provider:

[To be supplied.]

Interconnection Customer:

[To be supplied.]

APPENDIX G

INTERCONNECTION REQUIREMENTS FOR A WIND GENERATING PLANT

Appendix G sets forth requirements and provisions specific to a wind generating plant. All other requirements of this LGIA continue to apply to wind generating plant interconnections.

A. Technical Standards Applicable to a Wind Generating Plant

i. Low Voltage Ride-Through (LVRT) Capability

A wind generating plant shall be able to remain online during voltage disturbances up to the time periods and associated voltage levels set forth in the standard below. The LVRT standard provides for a transition period standard and a post-transition period standard.

Transition Period LVRT Standard

The transition period standard applies to wind generating plants subject to FERC Order 661 that have either: (i) interconnection agreements signed and filed with the Commission, filed with the Commission in unexecuted form, or filed with the Commission as non-conforming agreements between January 1, 2006 and December 31, 2006, with a scheduled in-service date no later than December 31, 2007, or (ii) wind

generating turbines subject to a wind turbine procurement contract executed prior to December 31, 2005, for delivery through 2007.

1. Wind generating plants are required to remain in-service during three-phase faults with normal clearing (which is a time period of approximately 4 – 9 cycles) and single line to ground faults with delayed clearing, and subsequent post-fault voltage recovery to prefault voltage unless clearing the fault effectively disconnects the generator from the system. The clearing time requirement for a three-phase fault will be specific to the wind generating plant substation location, as determined by and documented by the transmission provider. The maximum clearing time the wind generating plant shall be required to withstand for a three-phase fault shall be 9 cycles at a voltage as low as 0.15 p.u., as measured at the high side of the wind generating plant step-up transformer (i.e. the transformer that steps the voltage up to the transmission interconnection voltage or "GSU"), after which, if the fault remains following the location-specific normal clearing time for three-phase faults, the wind generating plant may disconnect from the transmission system.

2. This requirement does not apply to faults that would occur between the wind generator terminals and the high side of the GSU or to faults that would result in a voltage lower than 0.15 per unit on the high side of the GSU serving the facility.

3. Wind generating plants may be tripped after the fault period if this action is intended as part of a special protection system.

4. Wind generating plants may meet the LVRT requirements of this standard by the performance of the generators or by installing additional equipment (e.g., Static VAr Compensator, etc.) within the wind generating plant or by a combination of generator performance and additional equipment.

5. Existing individual generator units that are, or have been, interconnected to the network at the same location at the effective date of the Appendix G LVRT Standard are exempt from meeting the Appendix G LVRT Standard for the remaining life of the existing generation equipment. Existing individual generator units that are replaced are required to meet the Appendix G LVRT Standard.

Post-transition Period LVRT Standard

All wind generating plants subject to FERC Order No. 661 and not covered by the transition period described above must meet the following requirements:

1. Wind generating plants are required to remain in-service during three-phase faults with normal clearing (which is a time period of approximately 4 – 9 cycles) and single line to ground faults with delayed clearing, and subsequent post-fault voltage recovery to prefault voltage unless clearing the fault effectively disconnects the generator from the system. The clearing time requirement for a three-phase fault will be specific to the wind generating plant substation location, as determined by and documented by the transmission provider. The maximum clearing time the wind generating plant shall be required to withstand for a three-phase fault shall be 9 cycles after which, if the fault remains following the location-specific normal clearing time for three-phase faults, the wind generating plant may disconnect from the transmission system. A wind generating plant shall remain interconnected during such a fault on the transmission system for a voltage level as low as zero volts, as measured at the high voltage side of the wind GSU.

2. This requirement does not apply to faults that would occur between the wind generator terminals and the high side of the GSU.

3. Wind generating plants may be tripped after the fault period if this action is intended as part of a special protection system.

4. Wind generating plants may meet the LVRT requirements of this standard by the performance of the generators or by installing additional equipment (e.g., Static VAr Compensator) within the wind generating plant or by a combination of generator performance and additional equipment.

5. Existing individual generator units that are, or have been, interconnected to the network at the same location at the effective date of the Appendix G LVRT Standard are exempt from meeting the Appendix G LVRT Standard for the remaining life of the existing generation equipment. Existing individual generator units that are replaced are required to meet the Appendix G LVRT Standard.

ii. Power Factor Design Criteria (Reactive Power)

A wind generating plant shall maintain a power factor within the range of 0.95 leading to 0.95 lagging, measured at the Point of Interconnection as defined in this LGIA, if the Transmission Provider's System Impact Study shows that such a requirement is necessary to ensure safety or reliability. The power factor range standard can be met by using, for example, power electronics designed to supply this level of reactive capability

(taking into account any limitations due to voltage level, real power output, etc.) or fixed and switched capacitors if agreed to by the Transmission Provider, or a combination of the two. The Interconnection Customer shall not disable power factor equipment while the wind plant is in operation. Wind plants shall also be able to provide sufficient dynamic voltage support in lieu of the power system stabilizer and automatic voltage regulation at the generator excitation system if the System Impact Study shows this to be required for system safety or reliability.

iii. Supervisory Control and Data Acquisition (SCADA) Capability

The wind plant shall provide SCADA capability to transmit data and receive instructions from the Transmission Provider to protect system reliability. The Transmission Provider and the wind plant Interconnection Customer shall determine what SCADA information is essential for the proposed wind plant, taking into account the size of the plant and its characteristics, location, and importance in maintaining generation resource adequacy and transmission system reliability in its area.

APPENDIX 6.1

INTERCONNECTION PROCEDURES FOR A WIND GENERATING PLANT

Appendix G sets forth procedures specific to a wind generating plant. All other requirements of this LGIP continue to apply to wind generating plant interconnections.

A. Special Procedures Applicable to Wind Generators

The wind plant Interconnection Customer, in completing the Interconnection Request required by section 3.3 of this LGIP, may provide to the Transmission Provider a set of preliminary electrical design specifications depicting the wind plant as a single equivalent generator. Upon satisfying these and other applicable Interconnection Request conditions, the wind plant may enter the queue and receive the base case data as provided for in this LGIP.

No later than six months after submitting an Interconnection Request completed in this manner, the wind plant Interconnection Customer must submit completed detailed electrical design specifications and other data (including collector system layout data) needed to allow the Transmission Provider to complete the System Impact Study.

O-PSCo, Public Service Company of Colorado Formulaic Rate Tables Version: 0.0.1 Effective: 11/17/2012

ATTACHMENT O - PSCo
Public Service Company of Colorado Formulaic Rates

O-PSCo Formula Rate, Table 1, Table of Contents Version: 0.0.1 Effective: 11/17/2012

Public Service Company of Colorado **Table 1**
Transmission Formula Rate Settlement Template **Table of Contents**
Twelve Months Ended December 31, 20XX

Table No.	Schedule/Workpaper	Description
Table 2	Est. Rates	Summary of Estimated Rates
Table 3	Actual Rates	Actual Rates and True-up
Table 4	ATRR Est.	Annual Transmission Revenue Requirements- Estimated
Table 5	ATRR Act	Annual Transmission Revenue Requirements- Actual
Table 6	WP_A-2	Prior Period Corrections
Table 7	WP_B-1	Gross Plant, Accumulated Depreciation & Amortization, and Depreciation Expense
Table 8	WP_B-2	Accumulated Deferred Income Taxes (Credits)
Table 9	WP_B-3	Accumulated Deferred Income Taxes (Debits)
Table 10	WP_B-4	Acquisition Adjustment
Table 11	WP_B-5	Prepayments- FERC Account 165
Table 12	WP_B-6	Materials and Supplies - FERC Account 154
Table 13	WP_B-7	Regulatory Liabilities- FERC Account 254
Table 14	WP_B-8	Construction Work in Progress
Table 15	WP_B-Inputs Est.	Rate Base Data Inputs- Estimated
Table 16	WP_B-Inputs Act.	Rate Base Data Inputs- Actual
Table 17	WP_C-1	Transmission O&M
Table 18	WP_C-2	Administrative and General Expenses
Table 19	WP_C-3	Post-Employment Benefits Other than Pensions (FAS 106)
Table 20	WP_C-4	Regulatory Commission Expense Detail (FERC Account 928)
Table 21	WP_D-1	Taxes Other Than Income Tax
Table 22	WP_E-1	Revenue Credits
Table 23	WP_F-1	Account 456.1- Revenues from Transmission of Electricity of Others
Table 24	WP_G-1	Capital Structure Details
Table 25	WP_H-1	Depreciation and Amortization Rates
Table 26	WP_I-1	Transmission System Peak Demand Summary
Table 27	Schedule 1	Scheduling System Control and Dispatch Service
Table 28	Schedule 2	Reactive Supply and Voltage Control From Generation Source Services
Table 29	Schedule 3	Regulation and Frequency Response Service
Table 30	Schedule 5	Operating Reserve - Spinning Reserve Service
Table 31	Schedule 6	Operating Reserve - Supplemental Reserve Service
Table 32	WP_FCR	Fixed Charge Rate Worksheet ("FCR")
Table 33	WP_Cost per Unit	Cost Per Unit
Table 34	WP_Load Factor	Schedule 3 Load Factor

O-PSCo Formula Rate, Table 2, Rates- Summary of Rates Version: 0.1.0 Effective: 1/1/2015

Public Service Company of Colorado

Table 2 Est. Rates

Transmission Formula Rate Settlement Template
Twelve Months Ended December 31, 20XX
Summary of Estimated Rates

Line No.	Description	Reference	Transmission Amount	
	Col. (1)	Col. (2)	Col. (3)	
1	**Revenue Requirement**	ATRR Est. Line 130	$ -	
2				
3	Prior Period Correction True up Adjustment	WP_A-2 Line 136	-	
4	Interest on Prior Period Correction True Up Adjustment	WP_A-2 Line 137	-	
5				
6	**Estimated Revenue Requirement with True Up**	Sum Lines 1 through 4	$ -	
7				
8	**Divisor**			
9	Transmission Network Load	WP_I-1 Line 15, Col. (g)	0	
10				
11	**Rates**			
12	Annual Cost ($/kW-Yr)	Line 6 / Line 9	$ -	/kW-year
13				
14	Network & Point-to-Point Rate ($/kW-Mo)	Line 12 / 12	$ -	/kW-month
15				
16	Weekly P-To-P Rate	Line 12 / 52	$ -	/kW-week
17	Daily P-To-P Rate (Capped at weekly rate)	Line 16 / 6	$ -	/kW-day
18	On Peak Hourly P-To-P Rate (Capped at weekly & daily rate)	(Line 17 / 16) X 1,000	$ -	/MWh
19	Off Peak Hourly P-To-P Rate	((Line 16 / 7) / 24) X 1,000	$ -	/MWh
20				
21	**FERC Annual Charge**	(Note 1)		/MWh
22				

Ancillary Service Rates (2)

Schedule 1- Scheduling, System Control and Dispatch

Monthly Point-to-Point Delivery	Schedule 1 Line 18	$ -	/kW-month	
Weekly Point-to-Point Delivery	Schedule 1 Line 19	$ -	/kW-week	
Daily Point-to-Point Delivery	Schedule 1 Line 20	$ -	/kW-day	
Hourly Point-to-Point Delivery	Schedule 1 Line 21	$ -	/MWh	
Network Integration Delivery	Schedule 1 Line 18	$ -	/kW-month	
Ancillary Service Delivery	Schedule 1 Line 18	$ -	/kW-month	

Schedule 2- Reactive Supply and Voltage Control From Generation Sources Service

Monthly Point-to-Point Delivery	Schedule 2 Line 24	$ -	/kW-month	
Weekly Point-to-Point Delivery	Schedule 2 Line 25	$ -	/kW-week	
Daily Point-to-Point Delivery	Schedule 2 Line 26	$ -	/kW-day	
Daily Point-to-Point Delivery off Peak	Schedule 2 Line 27	$ -	/kW-day	
Hourly Point-to-Point Delivery	Schedule 2 Line 28	$ -	/MWh	
Hourly Point-to-Point Delivery off Peak	Schedule 2 Line 29	$ -	/MWh	
Network Integration Delivery	Schedule 2 Line 24	$ -	/kW-month	
Ancillary Service Delivery	Schedule 2 Line 24	$ -	/kW-month	

Schedule 3 and 3A- Regulation and Frequency Response Service		Load	Non-VER	VER	
Reserved Capacity Factor applicable to network load or reserved capacity	Note 3	1.27%	0.30%	2.06%	
		$ -	$ -	$ -	
Monthly Point-to-Point Delivery	Schedule 3 Line 34	$ -	$ -	$ -	/kW-month
Weekly Point-to-Point Delivery	Schedule 3 line 35	$ -	$ -	$ -	/kW-week
Daily Point-to-Point	Schedule 3	$	$	$	/MW-

	Delivery on Peak	Line 36	-	-	-	day
	Daily Point-to-Point	Schedule 3	$	$	$	/MW-
49	Delivery off Peak	Line 37	-	-	-	day
	Hourly Point-to-Point	Schedule 3	$	$	$	
50	Delivery on Peak	Line 38	-	-	-	/MWh
	Hourly Point-to-Point	Schedule 3	$	$	$	
51	Delivery off Peak	Line 39	-	-	-	/MWh
	Network Integration	Schedule 3	$	$	$	/kW-
52	Delivery	Line 34	-	-	-	month
	Ancillary Service	Schedule 3	$	$	$	/kW-
53	Delivery	Line 34	-	-	-	month
54						
55						
56	**Schedule 5- Operating Reserve- Spinning Reserve Service**					
57	Reserved Capacity Factor applicable to network load or reserved capacity	Note 3	3.50%	x monthly Load		
58	Monthly Point-to-Point Delivery	Schedule 5 Line 22	$ -	/kW-month		
59	Weekly Point-to-Point Delivery	Schedule 5 Line 23	$ -	/kW-week		
60	Daily Point-to-Point Delivery	Schedule 5 Line 24	$ -	/kW-day		
61	Daily Point-to-Point Delivery off Peak	Schedule 5 Line 25	$ -	/kW-day		
62	Hourly Point-to-Point Delivery on Peak	Schedule 5 Line 26	$ -	/MWh		
63	Hourly Point-to-Point Delivery off Peak	Schedule 5 Line 27	$ -	/MWh		
64	Network Integration Delivery	Schedule 5 Line 22	$ -	/kW-month		
65	Ancillary Service Delivery	Schedule 5 Line 22	$ -	/kW-month		
66						
67	**Schedule 6 - Operating Reserve - Supplemental Reserve Service**					
68	Reserved Capacity Factor applicable to network load or reserved capacity	Note 3	3.50%	x monthly Load		
69	Monthly Point-to-Point Delivery	Schedule 6 Line 22	$ -	/kW-month		
70	Weekly Point-to-Point Delivery	Schedule 6 Line 23	$ -	/kW-week		
71	Daily Point-to-Point Delivery	Schedule 6 Line 24	$ -	/kW-day		
72	Daily Point-to-Point Delivery off Peak	Schedule 6 Line 25	$ -	/kW-day		
73	Hourly Point-to-Point Delivery on Peak	Schedule 6 Line 26	$ -	/MWh		
74	Hourly Point-to-Point	Schedule 6	$	/MW		

	Delivery off Peak	Line 27	-	h
	Network Integration	Schedule 6	$	/kW-mont
75	Delivery	Line 22	-	h
	Ancillary Service	Schedule 6	$	/kW-mont
76	Delivery	Line 22	-	h
77				
78	**Schedule 6a - Flex Reserve**			
79	Reserved Capacity Factor applicable to network load or reserved capacity	Note 3	18.08%	x monthly Load
			$ -	
	Monthly Point-to-	Schedule 6a	$	/kW-mont
80	Point Delivery	Line 34	-	h
	Weekly Point-to-Point	Schedule 6a	$	/kW-
81	Delivery	line 35	-	week
	Daily Point-to-Point	Schedule 6a	$	/kW-
82	Delivery	Line 36	-	day
	Daily Point-to-Point	Schedule 6a	$	/kW-
83	Delivery off Peak	Line 37	-	day
	Hourly Point-to-Point	Schedule 6a	$	/MW
84	Delivery on Peak	Line 38	-	h
	Hourly Point-to-Point	Schedule 6a	$	/MW
85	Delivery off Peak	Line 39	-	h
	Network Integration	Schedule 6a	$	/kW-mont
86	Delivery	Line 34	-	h
	Ancillary Service	Schedule 6a	$	/kW-mont
87	Delivery	Line 34	-	h

Note 1. The FERC's annual charge per MWh is established by the Commission annually, and is assessed to the Transmission Owner, and is passed through to the Transmission Customers.
Note 2. Ancillary Service Schedules 2, 3, 3A, 5, 6, 6A will be based on actual data from the latest FERC Form No. 1. These schedules will be updated annually with the Annual Update but will not be subject to the True-up provision. Ancillary Service Schedule 1 will be updated annually, will be based on forecast data and will be subject to the True-up provision.
Note 3. Fixed value that cannot change without a Section 205 or 206 filing.

O-PSCo Formula Rate, Table 3, ATRR Est.- Annual Trans. Rev Rqmts- Est Version: 0.0.1 Effective: 11/17/2012

Public Service Company of Colorado **Table 3**
Transmission Formula Rate Settlement Template **Actual Rates**
Twelve Months Ended December 31, 20XX
Actual Rates and True-up

Line No.	Description	Reference	Actual Rates	Estimated Rates	Difference (True-up) (Note 1)	
	Col. (1)	Col. (2)	Col. (3)	Col. (4)	Col. (5) = (3) - (4)	
1	**Revenue Requirement**	ATRR Act & Est. Line 130	$ -	$ -	$ -	
2						
3	**Divisor**					
4	Transmission Network Load	WP_I-1 Line 15	-	-	-	
5						
6	**Rates**					
7	Annual Cost ($/kW-Yr)	Line 1 / Line 4	$ -	$ -	$ -	/kW-year
8						
9	Network & Point-to-Point Rate ($/kW-Mo)	Line 7 / 12	$ -	$ -	$ -	/kW-month
10						
11	Weekly P-To-P Rate	Line 7 / 52	$ -	$ -	$ -	/kW-week
12	Daily P-To-P Rate (Capped at weekly rate)	Line 11 / 6	$ -	$ -	$ -	/kW-day
13	On Peak Hourly P-To-P Rate (Capped at weekly & daily rate)	(Line 12 / 16) X 1,000	$ -	$ -	$ -	/MWh
14	Off Peak Hourly P-To-P Rate	((Line 11 / 7) / 24) X 1,000	$ -	$ -	$ -	/MWh
15						
16						
17		**Ancillary Service Rates (Note 2)**				
18						
19	**Schedule 1- Scheduling, System Control and Dispatch**					
20	Monthly Point-to-Point Delivery	Schedule 1 Line 40 & 17	$ -	$ -	$ -	/kW-month
21	Weekly Point-to-Point Delivery	Schedule 1 Line 41 & 18	$ -	$ -	$ -	/kW-week
22	Daily Point-to-Point Delivery	Schedule 1 Line 42 & 19	$ -	$ -	$ -	/kW-day
23	Hourly Point-to-Point Delivery	Schedule 1 Line 43 & 20	$ -	$ -	$ -	/MWh
24	Network Integration Delivery	Schedule 1 Line 40 & 17	$ -	$ -	$ -	/kW-month
25	Ancillary Service Delivery	Schedule 1 Line 40 & 17	$ -	$ -	$ -	/kW-month

Note 1. The True-up calculations will include interest pursuant to Section 35.19a of the FERC's regulations. Interest will be calculated from the beginning of the Rate year to the date the refunds or surcharges are billed.

Note 2. Ancillary Service Schedule 1 is the only Ancillary Services rate that is subject to true up.

O-PSCo Formula Rate, Table 4, ATRR Act- Annual Trans. Rev Rqmts- Act Version: 0.0.2 Effective: 11/17/2012

Public Service Company of Colorado **Table 4**
Transmission Formula Rate Settlement Template **ATRR Est.**
Twelve Months Ended December 31, 20XX
Annual Transmission Revenue Requirements- Estimated

Line No.	RATE BASE & RETURN CALCULATION	Reference/Notes	Total	Allocator (Note O)		Transmission
	Col. (1)	Col. (2)	Col. (3)	Col. (4)		Col. (5)
1	GROSS PLANT IN SERVICE	(Note A)				
2	Production	WP_B-1 Col. (d), Line 2	-	NA	0.00%	-
3	Transmission	WP_B-1 Col. (d), Line 3	-	DA	100%	0
4	Distribution	WP_B-1 Col. (d), Line 4	-	NA	0.00%	-
5	General Plant	WP_B-1 Col. (d), Line 5	-	W/S	0.00%	0
6	Intangible Plant	WP_B-1 Col. (d), Line 6	-	W/S	0.00%	0
7	Common Intangible	WP_B-1 Col. (d), Line 7	-	CE	0.00%	0
8	Common General	WP_B-1 Col. (d), Line 8	-	CE	0.00%	0
9	TOTAL GROSS PLANT	Sum Lines 2 through 8	-			-
10		Line 9, Col (5) divided by Col (3)		**GP =**	**0.00%**	
11						
12	ACCUMULATED DEPRECIATION	(Note A)				
13	Production	WP_B-1 Col. (d), Line 12	-	NA	0.00%	-
14	Transmission	WP_B-1 Col. (d), Line 13	-	DA	100%	-
15	Distribution	WP_B-1 Col. (d), Line 14	-	NA	0.00%	-
16	General Plant	WP_B-1 Col. (d), Line 15	-	W/S	0.00%	-
17	Intangible Plant	WP_B-1 Col. (d), Line 16	-	W/S	0.00%	-
18	Common Intangible	WP_B-1 Col. (d), Line 17	-	CE	0.00%	-
19	Common General	WP_B-1 Col. (d), Line 18	-	CE	0.00%	-
20	TOTAL ACCUMULATED DEPRECIATION	Sum Lines 13 through 19	-			-
21						
22	NET ACQUISITION ADJUSTMENT	(Note B)				
23	Production	WP_B-4 Col.(i) Line 15	-	NA	0.00%	-
24	Transmission Serving Production	WP_B-4 Col.(j) Line 15	-	NA	0.00%	-
25	Transmission Serving Transmission	WP_B-4 Col.(k) Line 15	-	DA	100%	-
26	TOTAL NET ACQUISITION ADJUSTMENT	Sum Lines 23 through 25	-			-
27						
28	NET PLANT IN SERVICE	(Note A)				
29	Production	Line 2 minus 13 plus 23 plus 24	-			-

30	Transmission	Line 3 minus 14 plus 25	-			-
31	Distribution	Line 4 minus 15	-			-
32	General Plant	Line 5 minus 16	-			-
33	Intangible Plant	Line 6 minus 17	-			-
34	Common Intangible	Line 7 minus 18	-			-
35	Common General	Line 8 minus 19	-			-
36	TOTAL NET PLANT IN SERVICE	Sum Lines 29 through 35	-			-
37		Line 36, Col (5) divided by Col (3)		**NP=**	**0.00%**	
38						
39	OTHER RATE BASE ITEMS	(Note C)				
40	Account No. 281	WP_B-2 Col (c) & (e), Line 3	-	DA	0.00%	-
41	Account No. 282	WP_B-2 Col (c) & (e), Line 30	-	DA		-
42	Account No. 283	WP_B-2 Col (c) & (e), Line 44	-	DA		-
43	Account No. 190	WP_B-3 Col (c) & (e), Line 81	-	DA		-
44	Regulatory Liabilities- FERC Account No. 254 (Note C)	WP_B-7 Col (e), Line 14	-	W/S	0.00%	-
45	Account No. 255	267.8.h	-	DA	100%	-
46	Account No. 107 (CWIP) (Note E)	WP_B-8 Col (a), Line 16	-	DA	100%	-
47	Net Pre-Funded AFUDC on CWIP included (Note E)	WP_B-8 Col (d), Line 16	-	DA	100%	-
48	Unamortized Balance of Abandoned Incentive Plant (Note E)	WP_B-Inputs Est. Line 143	-	DA	100%	-
49	Unamortized Balance of Extraordinary Property Loss (Note E)	WP_B-Inputs Est. Line 143	-	DA	100%	-
50	TOTAL OTHER RATE BASE ITEMS	Sum Lines 40 through 49	-			-
51						
52	LAND HELD FOR FUTURE USE (Note F)	WP_B-Inputs Est. Line 143	-	TP	0.00%	-
53						
54	WORKING CAPITAL					
55	Cash Working Capital	(Note G)	-			-
56	Materials & Supplies - Transmission	WP_B-6 Line 29	-	TP	0.00%	-
57	Materials & Supplies - Other	WP_B-6 Line 31	-	NP	0.00%	-
58	Prepayments (Account 165) Plant Related	WP_B-5 Line 8	-	NP	0.00%	-
59	Prepayments (Account 165) Labor Related	WP_B-5 Line 15	-	W/S	0.00%	-
60	Prepayments (Account 165) Transmission Related	WP_B-5 Line 19	-	TP	0.00%	-
61	Prepayments (Account 165) Other Not Allocated	WP_B-5 Line 29	-	NA	0.00%	-
62	TOTAL WORKING CAPITAL	Sum Lines 55 through 61	-			-
63						
64	RATE BASE	Line 36 plus 50 plus 52 plus 62	-			-
65						
66	Rate of Return	Line 158	0.00%			0.00%

67						
68	RETURN (Rate Base * Rate of Return)	Line 64 times Line 66	-			-

Line No.	EXPENSE, TAXES & REVENUE REQUIREMENTS CALCULATION	Reference/Notes	Total	Allocator (Note O)		Total Transmission
	Col. (1)	Col. (2)	Col. (3)	Col. (4)		Col. (5)
69	OPERATION & MAINTENANCE EXPENSE					
70	Transmission	WP_C-1 Line 31	-			
71	Less Total Account 561	WP_C-1 Line 36	-			
72	Add Back Account 561.4	WP_C-1 Line 5	-			
73	Add Back Account 561.5	WP_C-1 Line 6	-			
74	Add Back Account 561.6	WP_C-1 Line 7	-			
75	Add Back Account 561.7	WP_C-1 Line 8	-			
76	Add Back Account 561.8	WP_C-1 Line 9	-			
77	Less Total Account 565 (Note H)	WP_C-1 Line 13	-			
78	Add Back Account 565.25- System Integration Costs	WP_C-1 Line 34	-			
79	Transmission Subtotal	Sum Lines 70 through 78	-	TP	0.00%	-
80						
81	Administrative and General (Note I)	WP_C-2 Line 15	-			
82	Less: Acc. 924, Property Insurance	WP_C-2 Line 5	-			
83	Balance of A & G	Sum Lines 81 through 82	-	W/S	0.00%	-
84	Plus: Account 924, Property Insurance	Line 82	-	NP	0.00%	-
85	Account 928 - Transmission Specific	WP_C-4 Line 6	-	DA	100%	-
86	A & G Subtotal	Sum Lines 81 through 85	-			-
87						
88	TOTAL O & M EXPENSE	Line 79 plus Line 86	-			-
89						
90						
91	DEPRECIATION AND AMORTIZATION EXPENSE					
92	Transmission	WP_B-1 Line 24 Col. (d)	-	DA	100%	-
93	Plus: Pre-Funded AFUDC Amortization (Note E)	WP_B-8 Col (f), Line 18	-	DA	100%	-
94	Plus: Recovery of Abandoned Incentive Plant (Note E)	WP_B-Inputs Est. Line 143	-	DA	100%	-
95	Plus: Recovery of Extraordinary Property Loss (Note E)	WP_B-Inputs Est. Line 143	-	DA	100%	-
96	General	WP_B-1 Line 26 Col. (d)	-	W/S	0.00%	-
97	Intangible	WP_B-1 Line 27 Col. (d)	-	W/S	0.00%	-
98	Common Intangible	WP_B-1 Line 28 Col. (d)	-	CE	0.00%	-

99	Common General	WP_B-1 Line 29 Col. (d)	-	CE	0.00%	-
100	Acquisition Adjustment Amortization (Note F)	WP_B-4 Line 15 Col. Col. (o)	-	DA	100%	-
101	TOTAL DEPRECIATION AND AMORTIZATION	Sum Lines 92 through 100	-			-
102						
103	TAXES OTHER THAN INCOME	(Note J)				
104	Labor Related	WP_D-1 Line 5	-	W/S	0.00%	-
105	Plant Related	WP_D-1 Line 9	-	NP	0.00%	-
106	Miscellaneous	WP_D-1 Line 12	-	NA	0.00%	-
107	TOTAL OTHER TAXES	Sum Lines 104 through 106	-			-
108						
109	INCOME TAXES	(Note K)				
110	T=1 - {[(1 - SIT) * (1 - FIT)] / (1 - SIT * FIT * p)} =		0.00%			
111	CIT=(T/1-T) * (1-(WCLTD/R)) =		0.00%			
112	where WCLTD=(line 153) and R= (line 156)					
113	and FIT, SIT & p are as given in Note K.					
114	1 / (1 - T) = (from ln 110)		-			
115	Amortized Investment Tax Credit (enter negative)	Company Records				
116						
117	Income Tax Calculation	Line 68 times Line 111	-			-
118	ITC adjustment	Line 114 times Line 115	-	NP	0.00%	-
119	TOTAL INCOME TAXES	Sum Lines 117 through 118	-			-
120						
121						
122	REVENUE CREDITS	(Note L)				
123	Account No. 454 (Rent from Transmission Facilities)	WP_E-1 Line 4	-	DA	100%	-
124	Account No. 421.1 (Gain From Disposition of Utility Plant)	WP_E-1 Line 9	-	WS	0.00%	-
125	Account No. 456.1 (Revenue from Trans. of Elect. of Others)	WP_F-1 Line 36 Col. (b)	-	DA	100%	-
126	Account No. 456.1 (Revenue from Trans. of Elect. of Others)	WP_F-1 Line 36 Col. (c)	-	DA	100%	-
127	Settlement Credit	Note P	726,905	DA	100%	-
128	Total Revenue Credits		726,905			-
129						
130	REVENUE REQUIREMENT		(726,905)			-

Line No.	SUPPORTING CALCULATIONS	Reference/Notes	Total	Allocator (Note O)	Total Transmission
	Col. (1)	Col. (2)	Col. (3)	Col. (4)	Col. (5)

131	TRANSMISSION PLANT INCLUDED IN THE ATRR	(Note M)				
132	Transmission plant	WP_B-1 Col. (a), Line 3				-
133	Transmission related Acquisition Adjustment	WP_B-4 Col. (c), Line 15				-
134	Total Transmission Plant	Sum Lines 131 through 132				-
135	Eliminate Generator Step-up facilities	WP_B-Inputs Est. Line 118				-
136	Transmission plant included in OATT Trans Rate	Sum Lines 133 through 134				-
137	Percent of Transmission Plant in the ATRR	Line 136 divided by Line 134			**TP=**	**0.00%**
138						
139	WAGES & SALARY ALLOCATOR (W/S)					
140	Production	Company Records		NA	0.00%	-
141	Transmission	WP_C-1 Line 31 Col. (b)	-	TP	0.00%	-
142	Regional Market	Company Records		NA	0.00%	-
143	Distribution	Company Records		NA	0.00%	-
144	Other	Company Records		NA	0.00%	-
145	Total	Sum Lines 140 through 144	-			-
146						
147	W/S Allocator	Line 145, Col. Col. (5) divided by Col. Col. (3)			**W/S=**	**0.00%**
148						
149	Common to Electric Transmission Allocator	Common Plant to Electric (Common Plant Study)				
150		W/S Allocator, Line 147				0.00%
151		Line 149 times Line 150			**CE=**	**0.00%**
152						
153						
154	RETURN	(Note N)	$	%	Cost	Weighted
155	Long Term Debt	WP_G-1 Col (n), Line 6	-	0.00 %	0.00%	0.0000
156	Preferred Stock	WP_G-1 Col (n), Line 8	-	0.00 %	0.00%	0.0000
157	Common Stock	WP_G-1 Col (n), Line 14	-	0.00 %	9.72%	0.0000
158	Total	Sum Lines 155 through 157	-		**ROR=**	**0.0000**
159						
160						
161	PREPAYMENTS ALLOCATION FACTOR TO ELECTRIC		**20XX FERC Form No. 1**			
162						
163	Total Electric Plant in Service	207, Ln.100, Col. (g)				
164	Common PIS Allocated to Electric	356				
165	Electric Plant Held for Future Use	214, Ln. 47, Col. (d)				
166	Electric Construction Work in Progress	216, Ln. 43, Col. (b)				
167	Common CWIP Allocated to Electric	356				

168	Total Electric Plant	Sum Lines 163 through 167	-
169	Total Utility Plant	110, Ln. 4, Col. (c)	
170			
171	Electric Plant to Total Plant Allocation Factor	Line 168 divided by Line 169	**0.00%**

General Notes: a) References to data from FERC Form No. 1 are indicated as: page#.line#.col.#

Notes:

A Gross Plant, Accumulated Depreciation Reserves will be the average of thirteen monthly balances.

B Transmission serving transmission related amounts associated with the Calpine Acquisition are included.
Future Acquisition Adjustment amounts will not be included in the formula except as directed by the Commission pursuant to a Section 205 filing.
The Net Acquisition Adjustment will be the average of thirteen monthly balances.

C Reflects the BOY/EOY average of the transmission related portion of balances in Accounts 281, 282, 283, 190, and 255 as adjusted by any amounts in contra accounts identified as regulatory assets or liabilities related to FASB 106, 109, 133,158 or FASB Interpretation No. 48. Balance of Account 255 is reduced by prior flow throughs and completely excluded if the utility chose to utilize amortization of tax credits against taxable income as discussed in Note k.

D The Regulatory Liability associated with the sale of the Technical Service Building (TSB) will be included in Rate Base. Future Regulatory Liabilities will not be included in the formula except as directed by the Commission pursuant to a Section 205 filing.

E Includes any incentive Construction Work in Progress (CWIP), any related Pre-funded Allowance for Funds Used During Construction (AFUDC), any unamortized balances related to the recovery of abandoned incentive plant costs, any extraordinary property losses and any related depreciation and amortization expense amounts.
Formula amounts for all of the foregoing items will remain at $0 until approved by FERC pursuant to a Section 205 filing under a separate docket.

F Includes only transmission related or functionally booked as transmission land held for future use.

G Cash Working Capital will be set at and remain $0 until such time as PSCo files and receives FERC approval.

H Account 565 Transmission by Others is included only to the extent used to integrate the PSCo Transmission system.

I Post-Employment Benefits Other than Pensions (FAS 106) shall remain as a stated, fixed amount and shall not be changed except as directed by the Commission following a filing seeking such change pursuant to section 205 or 206 of the FPA. The adjustment is shown on WP_C-3 PBOP.
Regulatory Commission expenses (FERC Account 928) will be directly assigned or allocated to Transmission.
General Advertising Expenses (FERC Account 930.1) will be excluded.
All industry association dues recorded in FERC Account 930.2 will be excluded. The adjustment is shown on WP_C-2, Note 4.

J Includes only FICA, unemployment, property, and other assessments charged in the current year.
Taxes related to income are excluded. Franchise taxes are not included in transmission revenue requirement in the Rate Formula Template,

K The currently effective income tax rate, where FIT is the Federal income tax rate; SIT is the State income tax rate, and p = "the percentage of federal income tax deductible for state income taxes".
PSCo has elected to utilize amortization of tax credits against taxable income, rather than book tax credits to Account No. 255 and reduce rate base, must reduce its income tax expense by the amount of the Amortized Investment Tax Credit (Form 1, 266.8.f) less adjustments multiplied by (1/1-T) (page 3, line 30).

Inputs Required:

FIT =

SIT= (State Income Tax Rate or

		Composite SIT)
p =		(percent of FIT deductible for state purposes)

If a change in an income tax rate is known sufficiently in advance to be reflected in the estimated rates that will become effective January 1 for the upcoming formula rate year, PSCo will reflect the new tax rate(s) in the estimated rate calculations for the months in which the new tax rate will be in effect for the formula rate year. Otherwise, such tax change will be captured and reflected in the annual formula true-up by weighting the tax rates in effect during the year by the number of days each such tax rate was in effect.

L Includes income related to transmission facilities, such as pole attachments, rentals and special use for the Transmission facilities included herein.

FERC 421.1 Gain on the Disposition of Utility Property will be assigned or allocated to the transmission function based on the specific property sold.

Revenue from coincident peak loads included in the DIVISOR are also not included as revenue credits unless this revenue is offset by a corresponding expense

M Removes the dollars of plant booked to transmission plant that is excluded from the Tariff because it does not meet the Tariff's definition of Transmission

Facilities, or is booked to transmission (e.g. step-up transformers) that is included in the development of OATT ancillary service rates,

or is otherwise not eligible to be recovered under this Tariff.

N Return on Equity will be set at 9.72%. Thereafter, any change will require a filing with the Commission pursuant to FPA Section 205 or a Commission order pursuant to FPA Section 206.

If and when the Company issues preferred stock, footnote will indicate the authorizing regulatory agency, the docket/case number, and the date of the authorizing order.

O The calculation of the **GP** Allocator is found on Line 10.

The calculation of the **NP** Allocator is found on Line 37.

The calculation of the **W/S** Allocator is found on Line 147.

The calculation of the **CE** Allocator is found on Line 151.

The calculation of the **TP** Allocator is found on Line 137.

P The Company agreed in Docket No. ER12-1589-000 to include a total company credit in the Transmission Formula Template equal to $726,905. This amount is fixed and cannot be

changed without a Section 205 or 206 filing.

O-PSCo Formula Rate, Table 5, WP_A-1- True-up of Estimated Rates Version: 0.0.2 Effective: 11/17/2012

Public Service Company of Colorado **Table 5**
Transmission Formula Rate Settlement Template **ATRR Act**
Twelve Months Ended December 31, 20XX
Annual Transmission Revenue Requirements- Actual

Line No.	RATE BASE & RETURN CALCULATION	Reference/Notes	Total	Allocator (Note O)		Transmission
	Col. (1)	Col. (2)	Col. (3)	Col. (4)		Col. (5)
1	GROSS PLANT IN SERVICE	(Note A)				
2	Production	WP_B-1 Col. (d), Line 2	-	NA	0.00%	-
3	Transmission	WP_B-1 Col. (d), Line 3	-	DA	100%	-
4	Distribution	WP_B-1 Col. (d), Line 4	-	NA	0.00%	-
5	General Plant	WP_B-1 Col. (d), Line 5	-	W/S	0.00%	-
6	Intangible Plant	WP_B-1 Col. (d), Line 6	-	W/S	0.00%	-
7	Common Intangible	WP_B-1 Col. (d), Line 7	-	CE	0.00%	-
8	Common General	WP_B-1 Col. (d), Line 8	-	CE	0.00%	-
9	TOTAL GROSS PLANT	Sum Lines 2 through 8	-			-
10		Line 9, Col. (5) divided by Col. (3)		**GP=**	**0.00%**	
11						
12	ACCUMULATED DEPRECIATION	(Note A)				
13	Production	WP_B-1 Col. (d), Line 12	-	NA	0.00%	-
14	Transmission	WP_B-1 Col. (d), Line 13	-	DA	100%	-
15	Distribution	WP_B-1 Col. (d), Line 14	-	NA	0.00%	-
16	General Plant	WP_B-1 Col. (d), Line 15	-	W/S	0.00%	-
17	Intangible Plant	WP_B-1 Col. (d), Line 16	-	W/S	0.00%	-
18	Common Intangible	WP_B-1 Col. (d), Line 17	-	CE	0.00%	-
19	Common General	WP_B-1 Col. (d), Line 18	-	CE	0.00%	-
20	TOTAL ACCUMULATED DEPRECIATION	Sum Lines 13 through 19	-			-
21						
22	NET ACQUISITION ADJUSTMENT	(Note B)				
23	Production	WP_B-4 Col.(i) Line 15	-	NA	0.00%	-
24	Transmission Serving Production	WP_B-4 Col.(j) Line 15	-	NA	0.00%	-
25	Transmission Serving Transmission	WP_B-4 Col.(k) Line 15	-	DA	100%	-
26	TOTAL NET ACQUISITION ADJUSTMENT	Sum Lines 23 through 25	-			-
27						
28	NET PLANT IN SERVICE	(Note A)				
29	Production	Line 2 minus 13 plus 23 plus 24	-			-

30	Transmission	Line 3 minus 14 plus 25	-			-
31	Distribution	Line 4 minus 15	-			-
32	General Plant	Line 5 minus 16	-			-
33	Intangible Plant	Line 6 minus 17	-			-
34	Common Intangible	Line 7 minus 18	-			-
35	Common General	Line 8 minus 19	-			-
36	TOTAL NET PLANT IN SERVICE	Sum Lines 29 through 35	-			-
37		Line 36, Col (5) divided by Col (3)		**NP=**	**0.00%**	
38						
39	OTHER RATE BASE ITEMS	(Note C)				
40	Account No. 281	WP_B-2 Col. (c) & (e), Line 3	-	DA	0.00%	-
41	Account No. 282	WP_B-2 Col. (c) & (e), Line 30	-	DA		-
42	Account No. 283	WP_B-2 Col. (c) & (e), Line 83	-	DA		-
43	Account No. 190	WP_B-3 Col. (c) & (e), Line 84	-	DA		-
44	Regulatory Liabilities- FERC Account No. 254 (Note C)	WP_B-7 Line 14	-	W/S	0.00%	-
45	Account No. 255	267.8.h	-	DA	100%	-
46	Account No. 107 (CWIP) (Note E)	WP_B-8 Col. (a), Line 16	-	DA	100%	-
47	Net Pre-Funded AFUDC on CWIP included (Note E)	WP_B-8 Col. (d), Line 16	-	DA	100%	-
48	Unamortized Balance of Abandoned Incentive Plant (Note E)	WP_B-Inputs Act. Line 142	-	DA	100%	-
49	Unamortized Balance of Extraordinary Property Loss (Note E)	WP_B-Inputs Act. Line 142	-	DA	100%	-
50	TOTAL OTHER RATE BASE ITEMS	Sum Lines 40 through 49	-			-
51						
52	LAND HELD FOR FUTURE USE (Note F)	WP_B-Inputs Act. Line 142	-	TP	0.00%	-
53						
54	WORKING CAPITAL					
55	Cash Working Capital	(Note G)	-			-
56	Materials & Supplies - Transmission	WP_B-6 Line 29	-	TP	0.00%	-
57	Materials & Supplies - Other	WP_B-6 Line 31	-	NP	0.00%	-
58	Prepayments (Account 165) Plant Related	WP_B-5 Line 8	-	NP	0.00%	-
59	Prepayments (Account 165) Labor Related	WP_B-5 Line 15	-	W/S	0.00%	-
60	Prepayments (Account 165) Transmission Related	WP_B-5 Line 19	-	TP	0.00%	-
61	Prepayments (Account 165) Other Not Allocated	WP_B-5 Line 29	-	NA	0.00%	-
62	TOTAL WORKING CAPITAL	Sum Lines 55 through 61	-			-
63						
64	RATE BASE	Line 36 plus 50 plus 52 plus 62	-			-
65						
66	Rate of Return	Line 158	0.00%			0.00%

67					
68	RETURN (Rate Base * Rate of Return)	Line 64 times Line 66	-		-

Line No.	EXPENSE, TAXES & REVENUE REQUIREMENTS CALCULATION	Reference/Notes	Total	Allocator (Note O)		Total Transmission
	Col. (1)	Col. (2)	Col. (3)	Col. (4)		Col. (5)
69	OPERATION & MAINTENANCE EXPENSE					
70	Transmission	WP_C-1 Line 31	-			
71	Less Total Account 561	WP_C-1 Line 36	-			
72	Add Back Account 561.4	WP_C-1 Line 5	-			
73	Add Back Account 561.5	WP_C-1 Line 6	-			
74	Add Back Account 561.6	WP_C-1 Line 7	-			
75	Add Back Account 561.7	WP_C-1 Line 8	-			
76	Add Back Account 561.8	WP_C-1 Line 9	-			
77	Less Total Account 565 (Note H)	WP_C-1 Line 13	-			
78	Add Back Account 565.25- System Integration Costs	WP_C-1 Line 34	-			
79	Transmission Subtotal	Sum Lines 70 through 78	-	TP	0.00%	-
80						
81	Administrative and General (Note I)	WP_C-2 Line 15	-			
82	Less: Acc. 924, Property Insurance	WP_C-2 Line 5	-			
83	Balance of A & G	Sum Lines 81 through 82	-	W/S	0.00%	-
84	Plus: Account 924, Property Insurance	Line 82	-	NP	0.00%	-
85	Account 928 - Transmission Specific	WP_C-4 Line 7	-	DA	100%	-
86	A & G Subtotal	Sum Lines 81 through 85	-			-
87						
88	TOTAL O & M EXPENSE	Line 79 plus Line 86	-			-
89						
90						
91	DEPRECIATION AND AMORTIZATION EXPENSE					
92	Transmission	WP_B-1 Line 24 Col. (d)	-	DA	100%	-
93	Plus: Pre-Funded AFUDC Amortization (Note E)	WP_B-8 Col (f), Line 16	-	DA	100%	-
94	Plus: Recovery of Abandoned Incentive Plant (Note E)	WP_B-Inputs Act. Line 142	-	DA	100%	-
95	Plus: Recovery of Extraordinary Property Loss (Note E)	WP_B-Inputs Act. Line 142	-	DA	100%	-
96	General	WP_B-1 Line 26 Col. (d)	-	W/S	0.00%	-
97	Intangible	WP_B-1 Line 27 Col. (d)	-	W/S	0.00%	-
98	Common Intangible	WP_B-1 Line 28 Col. (d)	-	CE	0.00%	-

99	Common General	WP_B-1 Line 29 Col. (d)	-	CE	0.00%	-
100	Acquisition Adjustment Amortization (Note F)	WP_B-4 Line 15 Col. Col. (o)	-	DA	100%	-
101	TOTAL DEPRECIATION AND AMORTIZATION	Sum Lines 92 through 100	-			-
102						
103	TAXES OTHER THAN INCOME	(Note J)				
104	Labor Related	WP_D-1 Line 5	-	W/S	0.00%	-
105	Plant Related	WP_D-1 Line 9	-	NP	0.00%	-
106	Miscellaneous	WP_D-1 Line 12	-	NA	0.00%	-
107	TOTAL OTHER TAXES	Sum Lines 104 through 106	-			-
108						
109	INCOME TAXES	(Note K)				
110	T=1 - {[(1 - SIT) * (1 - FIT)] / (1 - SIT * FIT * p)} =		0.00%			
111	CIT=(T/1-T) * (1-(WCLTD/R)) =		0.00%			
112	where WCLTD=(line 153) and R= (line 156)					
113	and FIT, SIT & p are as given in Note K.					
114	1 / (1 - T) = (from ln 110)		-			
115	Amortized Investment Tax Credit (enter negative)	FF1 266.8.f				
116						
117	Income Tax Calculation	Line 68 times Line 111	-			-
118	ITC adjustment	Line 114 times Line 115	-	NP	0.00%	-
119	TOTAL INCOME TAXES	Sum Lines 117 through 118	-			-
120						
121						
122	REVENUE CREDITS	(Note L)				
123	Account No. 454 (Rent from Transmission Facilities)	WP_E-1 Line 4	-	DA	100%	-
124	Account No. 421.1 (Gain From Disposition of Utility Plant)	WP_E-1 Line 9	-	WS	0.00%	-
125	Account No. 456.1 (Revenue from Trans. of Elect. of Others)	WP_F-1 Line 36 Col. (b)	-	DA	100%	-
126	Account No. 456.1 (Revenue from Trans. of Elect. of Others)	WP_F-1 Line 36 Col. (c)	-	DA	100%	-
127	Settlement Credit	Note P	726,905	DA	100%	-
128	Total Revenue Credits		-			-
129						
130	REVENUE REQUIREMENT		-			-

Line No.	SUPPORTING CALCULATIONS	Reference/Notes	Total	Allocator (Note O)	Total Transmission
	Col. (1)	Col. (2)	Col. (3)	Col. (4)	Col. (5)
131	TRANSMISSION PLANT INCLUDED IN THE ATRR	(Note M)			
132	Transmission plant	WP_B-1 Col (a),			

		Line 3				-
133	Transmission related Acquisition Adjustment	WP_B-4 Col. (c), Line 15				-
134	Total Transmission Plant	Sum Lines 131 through 132				-
135	Eliminate Generator Step-up facilities	WP_B-Inputs Act. Line 117				-
136	Transmission plant included in OATT Trans Rate	Sum Lines 133 through 134				-
137	Percent of Transmission Plant in the ATRR	Line 136 divided by Line 134			**TP=**	**0.00%**
138						
139	WAGES & SALARY ALLOCATOR (W/S)					
140	Production	FF1. 354.20.b		NA	0.00%	-
141	Transmission	WP_C-1 Line 31 Col. (b)	-	TP	0.00%	-
142	Regional Market	FF1. 354.22.b		NA	0.00%	-
143	Distribution	FF1. 354.23.b		NA	0.00%	-
144	Other	FF1. 354.24.b		NA	0.00%	-
145	Total	Sum Lines 140 through 144	-			-
146						
147	W/S Allocator	Line 145, Col. Col. (5) divided by Col. Col. (3)			**W/S=**	**0.00%**
148						
149	Common to Electric Transmission Allocator	FF1.356				
150		W/S Allocator, Line 147				0.00%
151		Line 149 times Line 150			**CE=**	**0.00%**
152						
153						
154	RETURN	(Note N)	$	%	Cost	Weighted
155	Long Term Debt	WP_G-1 Line 6	-	0.00 %	0.00%	0.0000
156	Preferred Stock	WP_G-1 Line 8	-	0.00 %	0.00%	0.0000
157	Common Stock	WP_G-1 Line 14	-	0.00 %	9.72%	0.0000
158	Total	Sum Lines 155 through 157	-		**ROR=**	**0.0000**
159						
160						
161	PREPAYMENTS ALLOCATION FACTOR TO ELECTRIC		**20XX FERC Form No. 1**			
162						
163	Total Electric Plant in Service	207, Ln.100, Col. (g)				
164	Common PIS Allocated to Electric	356				
165	Electric Plant Held for Future Use	214, Ln. 47, Col. (d)				
166	Electric Construction Work in Progress	216, Ln. 43, Col. (b)				
167	Common CWIP Allocated to Electric	356				
168	Total Electric Plant	Sum Lines 163 through 167	-			
169	Total Utility Plant	110, Ln. 4, Col. (c),				

		plus Ln. 16, Col. (c)	
170			
171	Electric Plant to Total Plant Allocation Factor	Line 168 divided by Line 169	**0.00%**

General Notes: a) References to data from FERC Form No. 1 are indicated as: page#.line#.col.#

Notes:

A Gross Plant, Accumulated Depreciation Reserves will be the average of thirteen monthly balances.

B Transmission serving transmission related amounts associated with the Calpine Acquisition are included.
Future Acquisition Adjustment amounts will not be included in the formula except as directed by the Commission pursuant to a Section 205 filing.
The Net Acquisition Adjustment will be the average of thirteen monthly balances.

C Reflects the BOY/EOY average of the transmission related portion of balances in Accounts 281, 282, 283, 190, and 255 as adjusted by any amounts in contra accounts identified as regulatory assets or liabilities related to FASB 106, 109, 133,158 or FASB Interpretation No. 48. Balance of Account 255 is reduced by prior flow throughs and completely excluded if the utility chose to utilize amortization of tax credits against taxable income as discussed in Note k.

D The Regulatory Liability associated with the sale of the Technical Service Building (TSB) will be included in Rate Base. Future Regulatory Liabilities will not be included in the formula except as directed by the Commission pursuant to a Section 205 filing.

E Includes any incentive Construction Work in Progress (CWIP), any related Pre-funded Allowance for Funds Used During Construction (AFUDC), any unamortized balances related to the recovery of abandoned incentive plant costs, any extraordinary property losses and any related depreciation and amortization expense amounts.
Formula amounts for all of the foregoing items will remain at $0 until approved by FERC pursuant to a Section 205 filing under a separate docket.

F Includes only transmission related or functionally booked as transmission land held for future use.

G Cash Working Capital will be set at and remain $0 until such time as PSCo files and receives FERC approval.

H Account 565 Transmission by Others is included only to the extent used to integrate the PSCo Transmission system.

I Post-Employment Benefits Other than Pensions (FAS 106) shall remain as a stated, fixed amount and shall not be changed except as directed by the Commission following a filing seeking such change pursuant to section 205 or 206 of the FPA. The adjustment is shown on WP_C-3 PBOP.
Regulatory Commission expenses (FERC Account 928) will be directly assigned or allocated to Transmission.
General Advertising Expenses (FERC Account 930.1) will be excluded.
All industry association dues recorded in FERC Account 930.2 will be excluded. The adjustment is shown on WP_C-2, Note 4.

J Includes only FICA, unemployment, property, and other assessments charged in the current year.
Taxes related to income are excluded. Franchise taxes are not included in transmission revenue requirement in the Rate Formula Template,

K The currently effective income tax rate, where FIT is the Federal income tax rate; SIT is the State income tax rate, and p = "the percentage of federal income tax deductible for state income taxes".
PSCo has elected to utilize amortization of tax credits against taxable income, rather than book tax credits to Account No. 255 and reduce rate base, must reduce its income tax expense by the amount of the Amortized Investment Tax Credit (Form 1, 266.8.f) less adjustments multiplied by (1/1-T) (page 3, line 30).

Inputs Required:

FIT =

SIT= (State Income Tax Rate or Composite SIT)

p = (percent of FIT deductible for state purposes)

If a change in an income tax rate is known sufficiently in advance to be reflected in the estimated rates that will become effective January 1 for the upcoming formula rate year, PSCo will reflect the new tax rate(s) in the estimated rate calculations for the months in which the new tax rate will be in effect for the formula rate year. Otherwise, such tax change will be captured and reflected in the annual formula true-up by weighting the tax rates in effect during the year by the number of days each such tax rate was in effect.

L Includes income related to transmission facilities, such as pole attachments, rentals and special use for the Transmission facilities included herein.
FERC 421.1 Gain on the Disposition of Utility Property will be assigned or allocated to the transmission function based on the specific property sold.
Revenue from coincident peak loads included in the DIVISOR are also not included as revenue credits unless this revenue is offset by a corresponding expense

M Removes the dollars of plant booked to transmission plant that is excluded from the Tariff because it does not meet the Tariff's definition of Transmission
Facilities, or is booked to transmission (e.g. step-up transformers) that is included in the development of OATT ancillary service rates,
or is otherwise not eligible to be recovered under this Tariff.

N Return on Equity will be set at 9.72%. Thereafter, any change will require a filing with the Commission pursuant to FPA Section 205 or a Commission order pursuant to FPA 206.
If and when the Company issues preferred stock, footnote will indicate the authorizing regulatory agency, the docket/case number, and the date of the authorizing order.

O The calculation of the **GP** Allocator is found on Line 10.
The calculation of the **NP** Allocator is found on Line 37.
The calculation of the **W/S** Allocator is found on Line 147.
The calculation of the **CE** Allocator is found on Line 151.
The calculation of the **TP** Allocator is found on Line 137.

P The Company agreed in Docket No. ER12-1589-000 to include a total company credit in the Transmission Formula Template equal to $726,905. This amount is fixed and cannot be changed without a Section 205 or 206 filing.

O-PSCo Formula Rate, Table 6, WP_A-2- Prior Period Corrections Version: 0.0.1 Effective: 11/17/2012

Public Service Company of Colorado **Table 6**
Transmission Formula Rate Settlement Template **WP_A-2**
Twelve Months Ended December 31, 20XX
Prior Period Corrections

Line No.			
1	Explanation of Prior Period Correction:		
2			
3			
4	Rate Year Prior Period Correction Applicable to (input year)		
5	Effective True-up Year for Rate Year Prior Period Correction (line 4 year + 2 years)	0	
6	Year Prior Period Correction Settled/Agreed (input)		
7	Rate Year Prior Period Correction will be Included in ATRR (line 6 year + 1 year)	0	
8	Number of Months Prior Period Correction Subject to Interest ((ln 7 year - ln 4 year) * 12)	0	
9	I. Revenue Requirement True-up:		
10	Revenue Requirement for Prior Period Correction True-up Year without Prior Period Correction (input)		
11	Revised Revenue Requirement for True-up Year with Prior Period Correction (input)		
12	Revenue Requirement True-up Adjustment (Over Recovery is a Credit, Under Recovery is a Debit) (ln 11 - ln 10)	$0	
13	II. Volume True-up:		
14	Divisor for Prior Period Correction True-up Year without Prior Period Correction (input)		kw
15	Divisor for True-up Year with Prior Period Correction (input)		kw
16	Volume Adjustment (line 14 - line 15)	0	kw
17	Actual Rate (line 10 / line 14)	$0.00	
18	Revised Rate (line 11 / line 15)	$0.00	
19	Volume Revenue Adjustment (Over Recovery is a Credit, Under Recovery is a Debit) (line 16 x line 17)	$0	
20	Net Prior Period Correction True-up Adjustment (Over Recovery is a Credit, Under Recovery is a Debit) (line 12 + line 19)	$0	
21	III. Interest Calculation:		

	Month/Year	FERC Quarterly Interest Rates	Number of Days in Month	Monthly Interest Rate
22				
23				
24				
25				0.0000

26				0.0000
27				0.0000
28				0.0000
29				0.0000
30				0.0000
31				0.0000
32				0.0000
33				0.0000
34				0.0000
35				0.0000
36				0.0000
37				0.0000
38				0.0000
39				0.0000
40				0.0000
41				0.0000
42				0.0000
43				0.0000
44				0.0000
45				0.0000
46	Average Monthly Interest Rate			0.0000

47	Over/Under Recovery Amount (ln 20 amount)	$0
48	Average Monthly Interest Rate (ln 46)	0.000
49	Monthly Interest Recovery Amount (ln 47 x ln 48)	$0
50	Number of Months for Interest Recovery Amount (from line 8)	0
51	Interest Recovery Amount (ln 50 times ln 49)	$0
52	Prior Period Correction Adjustment (ln 20)	**$0 (Input to Annual Update)**
53	Interest on Prior Period Correction Adjustment (ln 51)	**$0 (Input to Annual Update)**

Note:
The interest is calculated persuant to Section 35.19a using the interest rate posted on the FERC website.

See link to website below.

http://www.ferc.gov/legal/acct-matts/interest-rates.asp#skipnavsub

O-PSCo Formula Rate, Table 7, WP_B-1- Gross Plant, Accum Depr, Depr Exp Version: 0.0.1 Effective: 11/17/2012

Public Service Company of Colorado **Table 7**
Transmission Formula Rate Settlement Template **WP_B-1**
Twelve Months Ended December 31, 20XX
Gross Plant, Accumulated Depreciation & Amortization, and Depreciation Expense

Estimated

Line No.	Functional Class	Reference	Per Books 13 Month Avg	GSU Reclass 13 Month Avg (1)	Adjustments 13 Month Avg (2)	Adjusted Balance 13 Month Avg
			Col. (a)	Col. (b)	Col. (c)	Col. (d)
1	**Plant in Service:**					
2	Production Plant	WP_B-Inputs Est. Line 17	-	-	-	-
3	Transmission	WP_B-Inputs Est. Line 17	-	-	-	-
4	Distribution (3)	WP_B-Inputs Est. Line 17	-	-	-	-
5	General (3)	WP_B-Inputs Est. Line 17	-	-	-	-
6	Intangible (3) (4)	WP_B-Inputs Est. Line 17	-		-	-
7	Common Intangible (4) (5)	WP_B-Inputs Est. Line 17	-		-	-
8	Common General (3)	WP_B-Inputs Est. Line 17	-		-	-
9	Total Plant In Service with Adjustments	Sum Lines 2 through 8	-	-	-	-
10						
11	**Accumulated Depreciation & Amortization: (6)**					
12	Production Plant	WP_B-Inputs Est. Line 40	-	-	-	-
13	Transmission	WP_B-Inputs Est. Line 40	-	-	-	-
14	Distribution (3)	WP_B-Inputs Est. Line 40	-	-	-	-
15	General (3)	WP_B-Inputs Est. Line 40	-	-	-	-
16	Intangible (3) (4)	WP_B-Inputs Est. Line 40	-		-	-
17	Common Intangible (4) (5)	WP_B-Inputs Est. Line 40	-		-	-
18	Common General (3)	WP_B-Inputs Est. Line 40	-		-	-
19	Total Accumulated Depreciation & Amortization with Adjustments	Sum Lines 12 through 18	-	-	-	-
20						
21			**Per Books 12 Month Total**	**GSU Reclass 12 Month Total (1)**	**Adjustments 12 Month Total (2)**	**Adjusted Balance 12 Month Total**
22	**Depreciation and Amortization Expense: (6)**					
23	Production Plant	WP_B-Inputs Est. Line 46	-	-	-	-
24	Transmission	WP_B-Inputs Est. Line 46	-	-	-	-
25	Distribution (3)	WP_B-Inputs Est. Line 46	-	-	-	-
26	General (3)	WP_B-Inputs Est. Line 46	-	-	-	-
27	Intangible (3) (4)	WP_B-Inputs Est.				

		Line 46	-		-	-
28	Common Intangible (4) (5)	WP_B-Inputs Est. Line 46	-		-	-
29	Common General (3)	WP_B-Inputs Est. Line 46	-		0	-
30	Total Depreciation and Amortization Expense	Sum Lines 23 through 29	-	-	-	-

Notes:
1. Generator Step Up's (GSU) are eliminated from Transmission, Distribution, and General Plant and reassigned to Production Plant
2. Adjustments are shown on WP_B-Inputs Est. Lines 67, 86, 92
3. Smart Grid City (retail) is eliminated
4. Retail related Franchises and Consents are eliminated from FERC 302
5. Retail Related CRS (Customer Resources System) and OMS (Outage Management System) are eliminated from Common Plant FERC 303
6. Should the FERC and Colorado depreciation rates be different, the Company will keep separate books for the two jurisdictions

Actual

Line No.	Functional Class	Reference	Per Books 13 Month Avg	GSU Reclass 13 Month Avg (1)	Adjustments 13 Month Avg (2)	Adjusted Balance 13 Month Avg
			Col. (a)	Col. (b)	Col. (c)	Col. (d)
1	**Plant in Service:**					
2	Production Plant	WP_B-Inputs Act. Line 17	-	-	-	-
3	Transmission	WP_B-Inputs Act. Line 17	-	-	-	-
4	Distribution (3)	WP_B-Inputs Act. Line 17	-	-	-	-
5	General (3)	WP_B-Inputs Act. Line 17	-	-	-	-
6	Intangible (3) (4)	WP_B-Inputs Act. Line 17	-		-	-
7	Common Intangible (4) (5)	WP_B-Inputs Act. Line 17	-		-	-
8	Common General (3)	WP_B-Inputs Act. Line 17	-		-	-
9	Total Plant In Service with Adjustments	Sum Lines 2 through 8	-	-	-	-
10						
11	**Accumulated Depreciation & Amortization: (6)**					
12	Production Plant	WP_B-Inputs Act. Line 40	-	-	-	-
13	Transmission	WP_B-Inputs Act. Line 40	-	-	-	-
14	Distribution (3)	WP_B-Inputs Act. Line 40	-	-	-	-
15	General (3)	WP_B-Inputs Act. Line 40	-	-	-	-
16	Intangible (3) (4)	WP_B-Inputs Act. Line 40	-		-	-
17	Common Intangible (4) (5)	WP_B-Inputs Act. Line 40	-		-	-
18	Common General (3)	WP_B-Inputs Act. Line 40	-		-	-
19	Total Accumulated Depreciation & Amortization with Adjustments	Sum Lines 12 through 18	-	-	-	-
20						

			Per Books 12 Month Total	GSU Reclass 12 Month Total (1)	Adjustments 12 Month Total (2)	Adjusted Balance 12 Month Total
21						
22	**Depreciation and Amortization Expense: (6)**					
23	Production Plant	WP_B-Inputs Act. Line 46	-	-	-	-
24	Transmission	WP_B-Inputs Act. Line 46	-	-	-	-
25	Distribution (3)	WP_B-Inputs Act. Line 46	-	-	-	-
26	General (3)	WP_B-Inputs Act. Line 46	-	-	-	-
27	Intangible (3) (4)	WP_B-Inputs Act. Line 46	-		-	-
28	Common Intangible (4) (5)	WP_B-Inputs Act. Line 46	-		-	-
29	Common General (3)	WP_B-Inputs Act. Line 46	-		-	-
30	Total Depreciation and Amortization Expense	Sum Lines 23 through 29	-	-	-	-

Notes:
1. GSU's are eliminated from Transmission, Distribution, and General Plant and reassigned to Production Plant
2. Adjustments are shown on WP_B-Inputs Est. Lines 109, 128, 134
3. Smart Grid City (retail) is eliminated
4. Retail related Franchises and Consents are eliminated from FERC 302
5. Retail Related CRS (Customer Resources System) and OMS (Outage Management System) are eliminated from Common Plant FERC 303
6. Should the FERC and Colorado depreciation rates be different, the Company will keep separate books for the two jurisdictions

O-PSCo Formula Rate, Table 8, WP_B-2- Accum Deferred Income Taxes (Credits) Version: 0.0.1 Effective: 11/17/2012

Public Service Company of Colorado **Table 8**
Transmission Formula Rate Settlement Template **WP_B-2**
Twelve Months Ended December 31, 20XX
Accumulated Deferred Income Taxes (Credits)

Estimated

Line No.	Account Number	Balance at 12/31/20XX	Balance at 12/31/20XX	Average Balance	Adj (1)	Adjusted Average Balance
		Col. (a)	Col. (b)	Col. (c)	Col. (d)	Col. (e)
1	**Account 281 - Accelerated amortization property (4)**					
2		-	-	-	-	-
3	Total Acct. 281 (Form No. 1 pg. 272-273, Line 17, Col. b & k)	-	-	-	-	-
4						
5	**Account 282 - Other Property (4)**					
6	Plant Related- Direct Assigned to Transmission					
7		-	-	-	-	-
8		-	-	-	-	-
9		-	-	-	-	-
10		-	-	-	-	-
11		-	-	-	-	-
12		-	-	-	-	-
13		-	-	-	-	-
14		-	-	-	-	-
15		-	-	-	-	-
16	Total	-	-	-	-	-
17						
18	Plant Related- Allocated to Transmission					
19		-	-	-	-	-
20		-	-	-		-
21		-	-	-	-	-
22		-	-	-		-
23	Total	-	-	-	-	-
24	Labor Allocation Factors, ATRR Est. Line 147					0.00%
25	Total Plant Related Allocated to Transmission					-
26						
27	FAS 109	-	-	-	-	-
28	Sub-total FAS 109	-	-	-	-	-

29						
30	Total Acct. 282 (Form No. 1, pg. 274-275, ln 2 + Ln 6, col b & k)	-	-	-	-	-
31						
32	**Account 283 - Other (4)**					
33	Plant Related- Direct Assigned to Production					
34		-	-	-	-	-
35		-	-	-	-	-
36	Total	-	-	-	-	-
37						
38	Direct Assigned to Transmission					
39		-	-	-	-	-
40	Total					
41						
42	Plant Related- Allocated to Transmission					
43		-	-	-	-	-
44		-	-	-	-	-
45		-	-	-	-	-
46		-	-	-	-	-
47	Total	-	-	-	-	-
48	Labor Allocation Factors, ATRR Est. Line 147					0.00%
49	Total Plant Related Allocated to Transmission					-
50						
51	Labor Related					
52		-	-	-	-	-
53		-	-	-	-	-
54	Sub-total labor Related	-	-	-	-	-
55	Labor Allocation Factors, ATRR Est. Line 147					0.00%
56	Total Plant Related Allocated to Transmission					-
57						
58	Related to All Plant					
59		-	-	-	-	-
60		-	-	-	-	-
61		-	-	-	-	-
62	Sub-total Production Related	-	-	-	-	-
63	Net Plant Allocation Factor, ATRR Est. Line 36					0.00%
64	Total Related to All Plant					-
65						
66	Retail Related					
67		-	-	-	-	-

68		-	-	-	-	-
69		-	-	-	-	-
70		-	-	-	-	-
71	Sub-total Retail Related	-	-	-	-	-
72						
73	Other Non-Transmission Related					
74		-	-	-	-	-
40		-	-	-	-	-
41		-	-	-	-	-
42	Sub-total Other Related	-	-	-	-	-
43						
44	Total Acct. 283 (Form No. 1, pg. 276-277, line 9, col b & k)	-	-	-	-	-

Note: 1. Deferred Taxes associated with implementing Statements of Financial Accounting Standards Board 109, distribution, production, retail, and non-utility plant related are eliminated.

Note: 2. Adjustment to ADIT associated with plant adjustments, see WP_B-Inputs.

Note: 3. ADIT associated with Pension expense has been eliminated because the prepaid pension asset is not included in rate base.

Note: 4. Should the FERC and Colorado depreciation rates be different, the Company will keep separate books for the two jurisdictions

Actuals

Line No.	Account Number	Balance at 12/31/20XX	Balance at 12/31/20XX	Average Balance	Adj (1)	Adjusted Average Balance
		Col. (a)	Col. (b)	Col. (c)	Col. (d)	Col. (e)
1	**Account 281 - Accelerated amortization property (4)**					
2		-	-	-	-	-
3	Total Acct. 281 (Form No. 1 pg. 272-273, Line 17, Col. b & k)	-	-	-	-	-
4						
5	**Account 282 - Other Property (4)**					
6	Plant Related- Direct Assigned to Transmission					
7		-	-	-		-
8		-	-	-		-
9		-	-	-		-
10		-	-	-		-
11		-	-	-		-
12		-	-	-		-
13		-	-	-		-
14		-				

			-	-		-
15				-		-
16	Total	-	-	-	-	-
17						
18	Plant Related- Allocated to Transmission					
19		-	-	-	-	-
20		-	-	-	-	-
21		-	-	-		-
22				-		-
23	Total	-	-	-	-	-
24	Labor Allocation Factors, ATRR Act. Line 147					0.00%
25	Total Plant Related Allocated to Transmission					-
26						
27		-	-	-	-	-
28	Sub-total FAS 109	-	-	-	-	-
29						
30	Total Acct. 282 (Form No. 1, pg. 274-275, ln 2 + Ln 6, col b & k)	-	-	-	-	-
31						
32	**Account 283 - Other (4)**					
33	Plant Related- Direct Assigned to Production					
34		-	-	-	-	-
35		-	-	-	-	-
36		-	-	-	-	-
37	Total	-	-	-	-	-
38						
39	Plant Related- Allocated to Transmission					
40		-	-	-	-	-
41		-	-	-		-
42		-	-	-	-	-
43		-	-	-		-
44	Total	-	-	-	-	-
45	Labor Allocation Factors, ATRR Act. Line 147					0.00%
46	Total Plant Related Allocated to Transmission					-
47						
48	Labor Related					
49		-	-	-		-
50		-	-	-	-	-
51	Sub-total labor Related	-	-	-	-	-

52	Labor Allocation Factors, ATRR Act. Line 147					0.00%
53	Total Plant Related Allocated to Transmission					-
54						
55	Related to All Plant					
56		-	-	-		-
57		-	-	-		-
58		-	-	-		-
59		-	-	-		-
60	Sub-total Production Related	-	-	-	-	-
61	Net Plant Allocation Factor, ATRR Act. Line 36					0.00%
62	Total Related to All Plant					-
63						
64	Retail Related					
65		-	-	-	-	-
66		-	-	-	-	-
67		-	-	-		-
68		-	-	-	-	-
69		-	-	-	-	-
70		-	-	-	-	-
71		-	-	-	-	-
72	Sub-total Retail Related	-	-	-	-	-
73						
74	Other Non-Production Related					
75		-	-	-	-	-
76		-	-	-	-	-
77		-	-	-	-	-
78		-	-	-	-	-
79		-	-	-	-	-
80		-	-	-	-	-
81	Sub-total Other Related	-	-	-	-	-
82						
83	Total Acct. 283 (Form No. 1, pg. 276-277, line 9, col b & k)	-	-	-	-	-

Note:
1. Deferred Taxes associated with implementing Statements of Financial Accounting Standards Board 109, distribution, production, retail, and non-utility plant related are eliminated.

Note: 2. Adjustment to ADIT associated with plant adjustments, see WP_B-Inputs.

Note: 3. ADIT associated with Pension expense has been eliminated because the prepaid pension asset is not included in rate base.

Note: 4. Should the FERC and Colorado depreciation rates be different, the Company will keep separate books for the two jurisdictions

O-PSCo Formula Rate, Table 9, WP_B-3- Accum Deferred Income Taxes (Debits) Version: 0.0.1 Effective: 11/17/2012

Public Service Company of Colorado **Table 9**
Transmission Formula Rate Settlement Template **WP_B-3**
Twelve Months Ended December 31, 20XX
Accumulated Deferred Income Taxes (Debits)

Estimated

Line No.	Account No.	Balance at 12/31/20XX	Balance at 12/31/20XX	Average Balance	Adj (1)	Adjusted Average Balance
		Col. (a)	Col. (b)	Col. (c)	Col. (d)	Col. (e)
1	**Account 190- Accumulated Deferred Income Taxes (2)**					
2						
3	Production Related - Demand					
4		-	-	-		-
5	Total Production - Demand Related	-	-	-	-	-
6						
7	Production Related - Energy					
8		-	-	-	-	-
9		-	-	-	-	-
10		-	-	-	-	-
11	Total Production - Energy Related	-	-	-	-	-
12						
13	Plant Related- Direct Assigned to Transmission					
14		-	-	-	-	-
15		-	-	-	-	-
16		-	-	-	-	-
17		-	-	-	-	-
18		-	-	-	-	-
19		-	-	-	-	-
20		-	-	-	-	-
21		-	-	-	-	-
22		-	-	-	-	-
23		-	-	-	-	-
24		-	-	-	-	-
25	Total Plant Related- Direct Assigned to Transmission	-	-	-	-	-
26						
27	Plant Related- Allocated to Transmission					
28		-	-	-	-	-

29		-	-	-	-	-
30		-	-	-	-	-
31		-	-	-	-	-
32		-	-	-	-	-
33		-	-	-	-	-
34	Total Plant Related- Allocated to Transmission	-	-	-	-	-
35	Labor Allocation Factors, ATRR Est. Line 147					0.00%
36	Total Plant Related Allocated to Transmission					-
37						
38	Related to All Plant					
39		-	-	-	-	-
40		-	-	-	-	-
41		-	-	-	-	-
42		-	-	-	-	-
43		-	-	-	-	-
44		-	-	-	-	-
45	Total Related to All Plant	-	-	-	-	-
46	Net Plant Allocation Factor, ATRR Est. Line 36					0.00%
47	Allocated Total Related to All Plant					-
48						
49	Labor Related					
50		-	-	-	-	-
51		-	-	-	-	-
52		-	-	-	-	-
53		-	-	-	-	-
54		-	-	-	-	-
55		-	-	-	-	-
56		-	-	-	-	-
57		-	-	-	-	-
58		-	-	-	-	-
59		-	-	-	-	-
60		-	-	-	-	-
61	Total Labor Related	-	-	-	-	-
62	Labor Allocation Factors, ATRR Est. Line 147					0.00%
63	Allocated Total Labor Related					-

64						
65	Retail Related					
66		-	-	-	-	-
67		-	-	-	-	-
68		-	-	-	-	-
69		-	-	-	-	-
70		-	-	-	-	-
71		-	-	-	-	-
72		-	-	-	-	-
73		-	-	-	-	-
74	Total Retail Related	-	-	-	-	-
75						
76	Other Non-Transmission Related					
77		-	-	-	-	-
78	Total Other Related	-	-	-	-	-
79						
80						
81	**Total Account 190 (Form No. 1, page 234, line 8, cols b & c)**	-	-	-		-

Note:

1. Deferred Taxes associated with implementing Statements of Financial Accounting Standards Board 109, distribution, production, retail, and non-utility plant related are eliminated.
2. Should the FERC and Colorado depreciation rates be different, the Company will keep separate

Note: books for the two jurisdictions

Actual

Line No.	Account No.	Balance at 12/31/20XX	Balance at 12/31/20XX	Average Balance	Adjustments (1)	Adjusted Average Balance
		Col. (a)	Col. (b)	Col. (c)	Col. (d)	Col. (e)
1	**Account 190- Accumulated Deferred Income Taxes (2)**					
2						
3	Production Related - Demand					
4				-		-
5	Total Production - Demand Related	-	-	-	-	-
6						
7	Production Related - Energy					
8		-	-	-	-	-
9		-	-	-	-	-
10		-	-	-	-	-
11	Total Production - Energy Related	-	-	-	-	-
12						

13	Plant Related- Direct Assigned to Transmission					
14		-	-	-	-	-
15		-	-	-	-	-
16		-	-	-	-	-
17		-	-	-		-
18		-	-	-	-	-
19		-	-	-		-
20		-	-	-	-	-
21		-	-	-	-	-
22		-	-	-		-
23		-	-	-		-
24		-	-	-		-
25	Total Plant Related- Direct Assigned to Transmission	-	-	-	-	-
26						
27	Plant Related- Allocated to Transmission					
28		-	-	-		-
29		-	-	-		-
30		-	-	-		-
31		-	-	-		-
32		-	-	-		-
33		-	-	-		-
34	Total Plant Related- Allocated to Transmission	-	-	-	-	-
35	Labor Allocation Factors, ATRR Act. Line 147					0.00%
36	Total Plant Related Allocated to Transmission					-
37						
38	Related to All Plant					
39		-	-	-		-
40		-	-	-		-
41		-	-	-		-
42		-	-	-		-
43		-	-	-	-	-
44		-	-	-		-
45		-	-	-		-
46		-	-	-	-	-
47	Total Related to All Plant	-	-	-	-	-

48	Net Plant Allocation Factor, ATRR Act. Line 36					0.00%
49	Allocated Total Related to All Plant					-
50						
51	Labor Related					
52		-	-	-		-
53		-	-	-		-
54		-	-	-		-
55		-	-	-		-
56		-	-	-		-
57		-	-	-		-
58		-	-	-		-
59		-	-	-		-
60		-	-	-		-
61		-	-	-		-
62		-	-	-		-
63		-	-	-		-
64	Total Labor Related	-	-	-	-	-
65	Labor Allocation Factors, ATRR Act. Line 147					0.00%
66	Allocated Total Labor Related					-
67						
68	Retail Related					
69		-	-	-	-	-
70		-	-	-	-	-
71		-	-	-	-	-
72		-	-	-	-	-
73	Total Retail Related	-	-	-	-	-
74						
75	Other Non-Transmission Related					
76		-	-	-	-	-
77	Total Other Related	-	-	-	-	-
78						
79						
80	**Total Account 190 (Form No. 1, page 234, line 8, cols b & c)**	-	-	-		-

Note:
1. Deferred Taxes associated with implementing Statements of Financial Accounting Standards Board 109, distribution, production, retail, and non-utility plant related are eliminated.
2. Should the FERC and Colorado depreciation rates be different, the Company will keep separate

Note: books for the two jurisdictions

O-PSCo Formula Rate, Table 10, WP_B-4- Acquisition Adjustment Version: 0.0.1 Effective: 11/17/2012

Public Service Company of Colorado
Transmission Formula Rate Settlement Template
Twelve Months Ended December 31, 20YY

Acquisition Adjustment

Table 10

WP_B-4

Estimated

		FERC 114- Electric Plant Acquisition Adjustment				FERC 115- Accumulated Provision for Amortization of Electric Plant Acquisition Adjustment				Net Acquisition Adjustment (Amount included in Rate Base)			
Line No	**Description**	**Prod**	**Trans Serving Prod**	**Trans Serving Trans**	**Total (1)**	**Prod**	**Trans Serving Prod**	**Trans Serving Trans**	**Total (2)**	**Prod**	**Trans Serving Prod**	**Trans Serving Trans**	**Total**
		(a)	(b)	(c)	(d)=(a)+(b)+(c)	(e)	(f)	(g)	(h)=(e)+(f)+(g)	(i)=(a)-(e)	(j)=(b)-(f)	(k)=(c)-(g)	(l)=(i)+(j)+(k)
	Estimated Balance												
1													
2	December				-				-	-	-	-	-
3	January				-				-	-	-	-	-
4	February				-				-	-	-	-	-
5	March				-				-	-	-	-	-
6	April				-				-	-	-	-	-
7	May				-				-	-	-	-	-
8	June				-				-	-	-	-	-
9	July				-				-	-	-	-	-
10	August				-				-	-	-	-	-
11	September				-				-	-	-	-	-
12	October				-				-	-	-	-	-
13	November				-				-	-	-	-	-
14	December				-				-	-	-	-	-
15	13 Month Avg. (Lns 2 - 14)	-	-	-	-	-	-	-	-	-	-	-	-

Note: Only transmission related amounts associated with the Calpine Acquisition are included. Future Acquisition Adjustment amounts will not be included in the formula except as directed by the Commission pursuant to a Section 205 filing. The Acquisition Adjustment related to the Production function will be amortized over 40 years, Transmission Serving Production 55 years, and

Transmission Serving Transmission 55 years.

Source:
1. Company Records
2. Company Records

Actual

Line No	Description	FERC 114- Electric Plant Acquisition Adjustment				FERC 115- Accumulated Provision for Amortization of Electric Plant Acquisition Adjustment				Net Acquisition Adjustment (Amount included in Rate Base)			
		Prod	Trans Serving Prod	Trans Serving Trans	Prod	Prod	Trans Serving Prod	Trans Serving Trans	Total (2)	Prod	Trans Serving Prod	Trans Serving Trans	Total
		(a)	(b)	(c)	(d)=(a)+(b)+(c)	(e)	(f)	(g)	(h)=(e)+(f)+(g)	(i)=(a)-(e)	(j)=(b)-(f)	(k)=(c)-(g)	(l)=(i)+(j)+(k)
	Actual Balance												
1													
2	December				-				-	-	-	-	-
3	January				-				-	-	-	-	-
4	February				-				-	-	-	-	-
5	March				-				-	-	-	-	-
6	April				-				-	-	-	-	-
7	May				-				-	-	-	-	-
8	June				-				-	-	-	-	-
9	July				-				-	-	-	-	-
10	August				-				-	-	-	-	-
11	September				-				-	-	-	-	-
12	October				-				-	-	-	-	-
13	November				-				-	-	-	-	-
14	December				-				-	-	-	-	-
15	13 Month Avg. (Lns 2 - 14)	-		-	-	-		-	-	-	-	-	-

Note: Only transmission related amounts associated with the Calpine Acquisition are included. Future Acquisition Adjustment amounts will not be included in the formula except as directed by the Commission pursuant to a Section 205 filing. The Acquisition Adjustment related to the Production function will be amortized over 40 years, Transmission Serving Production 55 years, and Transmission Serving Transmission 55 years.

Source:

1. FERC Account 114- FERC Form No. 1 pg. 200 Ln. 12
2. FERC Account 115- FERC Form No. 1 pg. 200 Ln. 32

Public Service Company of Colorado
Transmission Formula Rate Template
Twelve Months Ended December 31, 20YY
Acquisition Adjustment

Table 10
WP_B-4

Estimated

Line No	Description	FERC 406 (Amount included in Depreciation and Amortization Expense) Production	Transmission Serving Production	Transmission Serving Transmission	Total (3)
		(m)	(n)	(o)	(p)=(m)+(n)+(o)
	Estimated Balance				
1					
2	December				
3	January				-
4	February				-
5	March				-
6	April				-
7	May				-
8	June				-
9	July				-
10	August				-
11	September				-
12	October				-
13	November				-
14	December				-
15	13 Month Avg. (Lns 2 - 14)	-	-	-	-

Source:
3. Company Records

Actual

Line No	Description	FERC 406 (Amount included in Depreciation and Amortization Expense) Production	Transmission Serving Production	Transmission Serving Transmission	Total (3)
		(m)	(n)	(o)	(p)=(m)+(n)+(o)
	Actual Balance				
1					
2	December				
3	January				-
4	February				-
5	March				-
6	April				-
7	May				-

8	June				-
9	July				-
10	August				-
11	September				-
12	October				-
13	November				-
14	December				-
15	13 Month Avg. (Lns 2 - 14)	-	-	-	-

Source:
3. FERC Account 406- FERC Form 1 pg. 114 Ln. 9

O-PSCo Formula Rate, Table 11, WP_B-5- Prepayments & Materials and Supplies Version: 0.0.1 Effective: 11/17/2012

Public Service Company of Colorado
Transmission Formula Rate Settlement Template
Twelve Months Ended December 31, 20XX
Prepayments- FERC Account 165

Table 11

WP_B-5

Estimated

Line No.	Description	Reference	12/31/20XX	01/31/20XX	02/28/20XX	03/31/20XX	04/30/20XX	05/31/20XX	06/30/20XX	07/31/20XX	08/31/20XX	09/30/20XX	10/31/20XX	11/30/20XX	12/31/20XX	13 Month Avg
			Col. (a)	Col. (b)	Col. (a)	Col. (d)	Col. (e)	Col. (f)	Col. (g)	Col. (h)	Col. (i)	Col. (j)	Col. (k)	Col. (l)	Col. (m)	Col. (n)
	Prepayments (FERC Account 165) (1)															
1	**Plant Related:**															
2																$ -
3																-
4																-
5																-
6	Total Plant Related		$ -	$ -	$ -	$ -	$ -	$ -	$ -	$ -	$ -	$ -	$ -	$ -	$ -	$ -
7	Allocation Factor to Electric	ATRR Est. Line 171														0.00 %
8	Total Plant Related Allocated to Electric															$ -
9																
10	**Labor Related:**															
11																$ -
12																-
13	Total Labor Related		$ -	$ -	$ -	$ -	$ -	$ -	$ -	$ -	$ -	$ -	$ -	$ -	$ -	$ -
14	Allocation Factor to Electric	ATRR Est. Line 171														0.00 %
15	Total Labor Related Allocated to Electric															$ -
16																
17	**Transmission Related:**															
18																$ -
19	Total Transmission Related		$ -	$ -	$ -	$ -	$ -	$ -	$ -	$ -	$ -	$ -	$ -	$ -	$ -	$ -
20																
21	**Other Related: Non-Transmission**															
22																$ -

23																-
24																-
25																-
26																-
27	Total Other Related		$ -	$ -	$ -	$ -	$ -	$ -	$ -	$ -	$ -	$ -	$ -	$ -	$ -	$ -
28	Allocation Factor to Electric	ATRR Est. Line 171														0.00 %
29	Total Other Related Allocated to Electric															$ -
30	**Total Prepayments**	Lines 6 + 13 + 19 + 27	$ -	$ -	$ -	$ -	$ -	$ -	$ -	$ -	$ -	$ -	$ -	$ -	$ -	
31																
32	**Additional Prepayments included in the FERC Form No. 1**															
33																
34																
35																
36																
37																
38																
39	**Total**	FERC Form No. 1 pg. 111, Line 57, Col. (c) & (d)	$ -	$ -	$ -	$ -	$ -	$ -	$ -	$ -	$ -	$ -	$ -	$ -	$ -	

Note 1: Prepayments are the 13-month average of the most recent calendar year actuals.

Actual

Line No.	Description	Reference	12/31/20XX	1/31/20XX	2/28/20XX	3/31/20XX	4/30/20XX	5/31/20XX	6/30/20XX	7/31/20XX	8/31/20XX	9/30/20XX	10/31/20XX	11/30/20XX	12/31/20XX	13 Month Avg
			Col. (a)	Col. (b)	Col. (a)	Col. (d)	Col. (e)	Col. (f)	Col. (g)	Col. (h)	Col. (i)	Col. (j)	Col. (k)	Col. (l)	Col. (m)	Col. (n)
	Prepayments (FERC Account 165) (1)															
1	**Plant Related:**															
2																$ -
3																-
4																-
5																-
6	Total Plant Related		$ -	$ -	$ -	$ -	$ -	$ -	$ -	$ -	$ -	$ -	$ -	$ -	$ -	$ -
7	Alloc	ATRR Act														0.00

	ation Factor to Electric	Line 171														%
8	Total Plant Related Allocated to Electric															$ -
9																
10	**Labor Related:**															
11																$ -
12																-
13																-
14																-
15	Total Labor Related		$ -	$ -	$ -	$ -	$ -	$ -	$ -	$ -	$ -	$ -	$ -	$ -	$ -	$ -
16	Allocation Factor to Electric	ATRR Act Line 171														0.00 %
17	Total Labor Related Allocated to Electric															$ -
18																
19	**Transmission Related:**															
20																$ -
21																-
22	Total Transmission Related		$ -	$ -	$ -	$ -	$ -	$ -	$ -	$ -	$ -	$ -	$ -	$ -	$ -	$ -
23																
24	**Other Related: Non-Transmission**															
25																$ -
26																-
27																-
28																-
29																-
30																-
31																-
32																-
33																-
34																-
35																-
36																-
37	Total Other Related		$ -	$ -	$ -	$ -	$ -	$ -	$ -	$ -	$ -	$ -	$ -	$ -	$ -	$ -
38	Allocation Factor to Electric	ATRR Act Line 171														0.00 %

39	Total Other Related Allocated to Electric														$ -
40	**Total Prepayments**	Lines 6 + 15 + 22 + 37	$ -	$ -	$ -	$ -	$ -	$ -	$ -	$ -	$ -	$ -	$ -	$ -	$ -
41															
42	**Additional Prepayments included in the FERC Form No. 1**														
43															
44															
45															
46															
47	**Total**	FERC Form No. 1 pg. 111, Line 57, Col. (c) & (d)	$ -	$ -	$ -	$ -	$ -	$ -	$ -	$ -	$ -	$ -	$ -	$ -	$ -

Note 1: Prepayments are the 13-month average of the most recent calendar year actuals.

O-PSCo Formula Rate, Table 12, WP_B-6 - Regulatory Liabilities Version: 0.0.1 Effective: 11/17/2012

Public Service Company of Colorado **Table 12**
Transmission Formula Rate Settlement Template **WP_B-6**
Twelve Months Ended December 31, 20XX
Materials and Supplies - FERC Account 154

Estimated

Line No.	Month	Year	Reference	Ending Balance (1)
	Col. (a)	Col (b)	Col. (c)	Col. (d)
1	December	20XX	FF1, Page 227, ln 12, Col. (b)	
2	January	20XX	Company Records	
3	February	20XX	Company Records	
4	March	20XX	Company Records	
5	April	20XX	Company Records	
6	May	20XX	Company Records	
7	June	20XX	Company Records	
8	July	20XX	Company Records	
9	August	20XX	Company Records	
10	September	20XX	Company Records	
11	October	20XX	Company Records	
12	November	20XX	Company Records	
13	December	20XX	FF1, Page 227, ln 12, Col. (c)	
14	13 Month Avg. (Lns 1 - 13)			$ -
15				
16	Materials & Supplies Allocation Factor at Year End			
17	Assigned to Construction (Estimated)		FF1, Page 227, ln 5, Col. (c)	
18	Assigned to Operation and Maintenance (Estimated)		FF1, Page 227, ln 6, Col. (c)	
19	Production Plant (Estimated)		FF1, Page 227, ln 7, Col. (c)	
20	Transmission Plant (Estimated)		FF1, Page 227, ln 8, Col. (c)	
21	Distribution Plant (Estimated)		FF1, Page 227, ln 9, Col. (c)	
22	Regional Transmission and Market Operation Plant (Estimated)		FF1, Page 227, ln 10, Col. (c)	
23	Assigned to - Other		FF1, Page 227, ln 11, Col. (c)	
24	Total Account 154 (sum Lns 17 - 23)			$ -
25				
26	Transmission Materials & Supplies Allocation Factor		Ln 20 / Ln 24	0.00%
27	Other Materials & Supplies Allocation Factor		Ln 23 / Ln 24	0.00%
28				
29	Transmission Materials & Supplies		(Ln 14 * Ln 26)	$ -
30				
31	Other Materials & Supplies		(Ln 14 * Ln 27)	$ -

Note 1: Materials and Supplies are the 13-month average of the most recent calendar year actuals.

Actual

Line No.	Month	Year	Reference	Ending Balance
	Col. (a)	Col (b)	Col. (c)	Col. (d)
1	December	20XX	FF1, Page 227, ln 12, Col. (b)	
2	January	20XX	Company Records	
3	February	20XX	Company Records	
4	March	20XX	Company Records	
5	April	20XX	Company Records	
6	May	20XX	Company Records	
7	June	20XX	Company Records	
8	July	20XX	Company Records	
9	August	20XX	Company Records	
10	September	20XX	Company Records	
11	October	20XX	Company Records	
12	November	20XX	Company Records	
13	December	20XX	FF1, Page 227, ln 12, Col. (c)	
14	13 Month Avg. (Lns 1 - 13)			$ -
15				
16	Materials & Supplies Allocation Factor at Year End			
17	Assigned to Construction (Estimated)		FF1, Page 227, ln 5, Col. (c)	
18	Assigned to Operation and Maintenance (Estimated)		FF1, Page 227, ln 6, Col. (c)	
19	Production Plant (Estimated)		FF1, Page 227, ln 7, Col. (c)	
20	Transmission Plant (Estimated)		FF1, Page 227, ln 8, Col. (c)	
21	Distribution Plant (Estimated)		FF1, Page 227, ln 9, Col. (c)	
22	Regional Transmission and Market Operation Plant (Estimated)		FF1, Page 227, ln 10, Col. (c)	
23	Assigned to - Other		FF1, Page 227, ln 11, Col. (c)	
24	Total Account 154 (sum Lns 17 - 23)			$ -
25				
26	Transmission Materials & Supplies Allocation Factor		Ln 20 / Ln 24	0.00%
27	Other Materials & Supplies Allocation Factor		Ln 23 / Ln 24	0.00%
28				
29	Transmission Materials & Supplies		(Ln 14 * Ln 26)	$ -
30				
31	Other Materials & Supplies		(Ln 14 * Ln 27)	$ -

O-PSCo Formula Rate, Table 13, WP_B-7-Construction Work in Progress Version: 0.0.1 Effective: 11/17/2012

Public Service Company of Colorado **Table 13**
Transmission Formula Rate Settlement Template **WP_B-7**
Twelve Months Ended December 31, 20XX
Regulatory Liabilities- FERC Account 254

Estimated

Line No.	Date	Reference	Beginning Balance	Amortization	Ending Balance
	Col. (a)	Col. (b)	Col. (c)	Col. (d)	Col. (e)
	Gain on the sale of the Technical Service Building (Electric portion)				
1	December	Company Records			-
2	January	Company Records			-
3	February	Company Records			-
4	March	Company Records			-
5	April	Company Records			-
6	May	Company Records			-
7	June	Company Records			-
8	July	Company Records			-
9	August	Company Records			-
10	September	Company Records			-
11	October	Company Records			-
12	November	Company Records			-
13	December	Company Records			-
14	13 Month Avg. (Lns 1 - 13)		$ -		$ -
15	12 Month Total. (Lns 2 - 13)			$ -	

Actual

Line No.	Date	Reference	Beginning Balance	Amortization	Ending Balance
	Col. (a)	Col. (b)	Col. (c)	Col. (d)	Col. (e)
	Gain on the sale of the Technical Service Building (Electric portion)				
1	December	FF1, Page 278.1			-
2	January	Company Records			-
3	February	Company Records			-
4	March	Company Records			-
5	April	Company Records			-
6	May	Company Records			-
7	June	Company Records			-
8	July	Company Records			-
9	August	Company Records			-
10	September	Company Records			-
11	October	Company Records			-
12	November	Company Records			-
13	December	FF1, Page 278.1			-
14	13 Month Avg. (Lns 1 - 13)		$ -		$ -

15	12 Month Total. (Lns 2 - 13)	$ -

O-PSCo Formula Rate, Table 14, WP_B-8 Version: 0.0.1 Effective: 11/17/2012

Public Service Company of Colorado **Table 14**
Transmission Formula Rate Settlement Template **WP_B-8**
Twelve Months Ended December 31, 20XX
Construction Work in Progress (1)

Estimated

Line No.	Work Order #	Approved in FERC Docket	Work Order Description	Months	CWIP Balance (2)	Prefunded AFUDC Adjustments (2): Adjustment to Gross Plant	Adjustment to Accumulated Reserves	Adjustment to Net Plant	Adjustment to ADIT	Annual Amortization
					Col. (a)	Col. (b)	Col. (c)	Col. (d)	Col. (e)	Col. (f)
1										
2				December				-		
3				January				-		
4				February				-		
5				March				-		
6				April				-		
7				May				-		
8				June				-		
9				July				-		
10				August				-		
11				September				-		
12				October				-		
13				November				-		
14				December				-		
15										
16				13 Month Avg. (Lns 2 - 14)	-	-	-	-		
17				BOY/EOY Avg. (Lns 2 and 14)					-	
18				12 Month Total (Sum Lns 3 - 14)						-

Notes:
(1) No CWIP cost data will be included except as directed by the Commission following a filing pursuant to section 205 of the FPA.
(2) Source: Unless noted otherwise, all data from the Capital Asset Accounting Work Order tracking system.

Actual

Line No.	Work Order #	Approved in FERC Docket	Work Order Description	Months	CWIP Balance (2)	Prefunded AFUDC Adjustments (2): Adjustment to Gross Plant	Adjustment to Accumulated Reserves	Adjustment to Net Plant	Adjustment to ADIT	Annual Amortization
					Col. (a)	Col. (b)	Col. (c)	Col. (d)	Col. (e)	Col. (f)
1										
2				December				-		
3				January				-		
4				February				-		

5	March				-		
6	April				-		
7	May				-		
8	June				-		
9	July				-		
10	August				-		
11	September				-		
12	October				-		
13	November				-		
14	December				-		
15							
16	13 Month Avg. (Lns 2 - 14)	-	-	-	-		
17	BOY/EOY Avg. (Lns 2 and 14)					-	
18	12 Month Total (Sum Lns 3 - 14)						-

Notes:

(1) No CWIP cost data will be included except as directed by the Commission following a filing pursuant to section 205 of the FPA.

(2) Source: Unless noted otherwise, all data from the Capital Asset Accounting Work Order tracking system.

O-PSCo Formula Rate, Table 15, WP_B-Inputs Est.- Rate Base Data Inputs Version: 0.0.1 Effective: 11/17/2012

Public Service Company of Colorado

Transmission Formula Rate Settlement Template

Twelve Months Ended December 31, 20XX

Rate Base Data Inputs- Estimated

Table 15
WP_B-Inputs
Est.

Gross Plant

		Intangible Plant	Steam Production	Hydraulic Production	Other Production	Transmission Plant	Distribution Plant	General Plant	Common Intangible	Common General
	Reference	Company Records	Company Records	Company Records	Company Records	Company Records	Company Records	Company Records	Company Records	Company Records
1	December									
2	January									
3	February									
4	March									
5	April									
6	May									
7	June									
8	July									
9	August									
10	September									
11	October									
12	November									
13	December									
14	13 Month Avg. (Lns 1 - 13)	-	-	-	-	-	-	-	-	-
15	Less ARO (13 Month Avg) (1)	-	-	-	-	-	-	-	-	-
16										
17	Adj Balance	-	-	-	-	-	-	-	-	-
18										

19 **Accumulated Depreciation and Amortization**

20

		Intangible Plant	Steam Production	Hydraulic Production	Other Production	Transmission Plant	Distribution Plant	General Plant	Common Intangible	Common General
22	Reference	Company Records	Company Records	Company Records	Company Records	Company Records	Company Records	Company Records	Company Records	Company Records
23	December									
24	January									
25	February									
26	March									
27	April									
28	May									
29	June									
30	July									
31	August									
32	September									

33	October									
34	November									
35	December									
36	13 Month Avg. (Lns 23 - 35)	-	-	-	-	-	-	-	-	-
37	Less ARO									
38	(13 Month Avg) (1)	-	-	-	-	-	-	-	-	-
39										
40	Adj Balance	-	-	-	-	-	-	-	-	-
41										
42	**Depreciation Expense**									
43										
44		**Intangible Plant**	**Steam Production**	**Hydraulic Production**	**Other Production**	**Transmission Plant**	**Distribution Plant**	**General Plant**	**Common Intangible**	**Common General**
45	Reference	Company Records	Company Records	Company Records	Company Records	Company Records	Company Records	Company Records	Company Records	Company Records
46	Total									
47										
48	**Plant Adjustments (4)**									
49										
50	**Gross Plant**									
51										
52		**Electric Intangible**			**Distribution Plant**	**General Plant**	**Common Intangible**			**Common General**
53		**FERC 302**	**Smart Grid City**	**Total**	**Smart Grid City**	**Smart Grid City**	**FERC 302**	**CRS**	**OMS**	**Total**	**Smart Grid City**
54	December			-						-	
55	January			-						-	
56	February			-						-	
57	March			-						-	
58	April			-						-	

59	May			-						-	
60	June			-						-	
61	July			-						-	
62	August			-						-	
63	September			-						-	
64	October			-						-	
65	November			-						-	
66	December			-						-	
67	13 Month Avg. (Lns 54 - 66)	-	-	-	-	-	-	-	-	-	-
68											
69	**Accumulated Depreciation**										
70											
71		**Electric Intangible**			**Distribution Plant**	**General Plant**	**Common Intangible**				**Common General**
72		**FERC 302**	**Smart Grid City**	**Total**	**Smart Grid City**	**Smart Grid City**	**FERC 302**	**CRS**	**OMS**	**Total**	**Smart Grid City**
73	December			-						-	
74	January			-						-	
75	February			-						-	
76	March			-						-	
77	April			-						-	
78	May			-						-	
79	June			-						-	
80	July			-						-	
81	August			-						-	
82	September			-						-	
83	October			-						-	

84	November			-						-	
85	December			-						-	
86	13 Month Avg. (Lns 73 - 85)	-	-	-	-	-	-	-	-	-	-
87											
88	**Depreciation Expense**										
89											
90		**Electric Intangible**			**Distribution Plant**	**General Plant**	**Common Intangible**				**Common General**
91		**FERC 302**	**Smart Grid City**	**Total**	**Smart Grid City**	**Smart Grid City**	**FERC 302**	**CRS**	**OMS**	**Total**	**Smart Grid City**
92	Dec 12 Month	-	-	-	-	-	-	-	-	-	-
93											
94	**ADIT**										
95		**Electric Intangible**			**Distribution Plant**	**General Plant**	**Common Intangible**				**Common General**
96		**FERC 302**	**Smart Grid City**	**Total**	**Smart Grid City**	**Smart Grid City**	**FERC 302**	**CRS**	**OMS**	**Total**	**Smart Grid City**

97	December			-						-	
98	December			-						-	
99	BOY/EOY Avg	-	-	-	-	-	-	-	-	-	-
100											
101											
102	**Generator Step ups**										
103		**Gross Plant**			**Accum Depreciation & Amort**			**ADIT**			
104		**Transmission GSU**	**Distribution GSU**	**General GSU**	**Transmission GSU**	**Distribution GSU**	**General GSU**	**Transmission GSU**	**Distribution GSU**	**General GSU**	
105	December							-	-	-	
106	January										
107	February										
108	March										
109	April										
110	May										
111	June										
112	July										
113	August										
114	September										
115	October										
116	November										
117	December							-	-	-	
118	13 Month Avg. (Lns 105 - 117)	-	-	-	-	-	-	-	-	-	
119											
120					**Depreciation Expense**						
121					**Transmission GSU**	**Distribution GSU**	**General GSU**				
122											
123	Dec 12 Month				-	-	-				
124											
125											
126											
127		**Unamort. Balance**	**Current Year**	**Unamortized Balance**		**Unamort. Balance of Extraordinary**	**Current Year**	**Unamortized Balance**		**Land Held**	
128		**of Abandoned**	**Amortization**	**End of**			**Amortization**	**End of**		**For Future**	
129		**Incentive Plant (2)**	**Expense (2)**	**Current Year**		**Property Loss (2)**	**Expense (2)**	**Current Year**		**Use (3)**	
130	December			-				-			
131	January			-				-			
132	February			-				-			
133	March			-				-			
134	April			-				-			
135	May			-				-			

136	June			-			-		
137	July			-			-		
138	August			-			-		
139	September			-			-		
140	October			-			-		
141	November			-			-		
142	December			-			-		
143	13 Month Avg. (Lns 130 - 142)	-	-	-	-	-	-		-
144									
145									
146	Note 1. ARO is not included in the budgeted amounts								
147	Note 2. Abandoned Plant and Extraordinary Property Loss will remain at zero and can not be changes without a Section 205 filing.								
148	Note 3. Plant Held for Future Use recovered in the formula will be limited to Transmission related land and land rights recorded in Account 105, Plant Held for Future Use.								
149	Note 4. Source of Plant Adjustments: Company Records.								

O-PSCo Formula Rate, Table 16 WP_B-Inputs Act. Rate Base Data Inputs Version: 0.0.1 Effective: 11/17/2012

Public Service Company of Colorado

Table 16 WP_B-Inputs Act.

Transmission Formula Rate Settlement Template
Twelve Months Ended December 31, 20XX
Rate Base Data Inputs- Actual

Gross Plant

		Intangible Plant	Steam Production	Hydraulic Production	Other Production	Transmission Plant	Distribution Plant	General Plant	Common Intangible	Common General
	FERC Form No. 1 reference	(page 204 & 205 Ln. 5)	(page 204 & 205 Ln. 16)	(page 204 & 205 Ln. 35)	(page 204 & 205 Ln. 45)	(page 206 & 207 Ln. 58)	(page 206 & 207 Ln. 75)	(page 206 & 207 Ln. 99)	(page 356)	(page 356)
1	December									
2	January									
3	February									
4	March									
5	April									
6	May									
7	June									
8	July									
9	August									
10	September									
11	October									
12	November									
13	December									
14	13 Month Avg. (Lns 1 - 13)	-	-	-	-	-	-	-	-	-
15	Less ARO (13 Month Avg) (1)									
16										
17	Adj Balance	-	-	-	-	-	-	-	-	-
18										
19	**Accumulated Depreciation and Amortization**									
20										
21		**Intangible Plant**	**Steam Production**	**Hydraulic Production**	**Other Production**	**Transmission Plant**	**Distribution Plant**	**General Plant**	**Common Intangible**	**Common General**
22	FERC Form No. 1 reference	(page 200 Ln. 21)	(page 219 Ln. 20)	(page 219 Ln. 22 + 23)	(page 219 Ln. 24)	(page 219 Ln. 25)	(page 219 Ln. 26)	(page 219 Ln. 28)	(page 356)	(page 356)
23	December									
24	January									
25	February									

26	March									
27	April									
28	May									
29	June									
30	July									
31	August									
32	September									
33	October									
34	November									
35	December									
36	13 Month Avg. (Lns 23 - 35)	-	-	-	-	-	-	-	-	-
37	Less ARO									
38	(13 Month Avg) (1)									
39										
40	Adj Balance	-	-	-	-	-	-	-	-	-
41										
42	**Depreciation Expense**									
43										
44		**Intangible Plant**	**Steam Production**	**Hydraulic Production**	**Other Production**	**Transmission Plant**	**Distribution Plant**	**General Plant**	**Common Intangible**	**Common General**
45	FERC Form No. 1 reference	(page 336 Ln. 1)	(page 336 Ln. 2)	(page 336 Ln. 4 + 5)	(page 336 Ln. 6)	(page 336 Ln. 7)	(page 336 Ln. 8)	(page 336 Ln. 10)	(page 336 Ln. 11)	(page 336 Ln. 11)
46	Total									
47										
48	**Plant Adjustments (4)**									
49	**Gross Plant**									
50										
51		**Electric Intangible**			**Distribution Plant**	**General Plant**	**Common Intangible**			**Common General**
52		**FERC 302**	**Smart Grid City**	**Total**	**Smart Grid City**	**Smart Grid City**	**FERC 302**	**CRS**	**OMS**	**Total**	**Smart Grid City**
53	December			-						-	
54	January			-						-	
55	February			-						-	
56	March			-						-	

57	April			-						-	
58	May			-						-	
59	June			-						-	
60	July			-						-	
61	August			-						-	
62	September			-						-	
63	October			-						-	
64	November			-						-	
65	December			-						-	
66	13 Month Avg. (Lns 53 - 65)	-	-	-	-	-	-	-	-	-	-

67

68 **Accumulated Depreciation**

69

70		Electric Intangible			Distribution Plant	General Plant	Common Intangible				Common General
71		FERC 302	Smart Grid City	Total	Smart Grid City	Smart Grid City	FERC 302	CRS	OMS	Total	Smart Grid City
72	December			-						-	
73	January			-						-	
74	February			-						-	
75	March			-						-	
76	April			-						-	
77	May			-						-	
78	June			-						-	
79	July			-						-	
80	August			-						-	
81	September			-						-	
82	October			-						-	
83	November			-						-	
84	December			-						-	
85	13 Month Avg. (Lns 72 - 84)	-	-	-	-	-	-	-	-	-	-

86

87 **Depreciation Expense**

88

	Electric Intangible			Distribution Plant	General Plant	Common Intangible				Common General
	FERC 302	Smart Grid City	Total	Smart Grid City	Smart Grid City	FERC 302	CRS	OMS	Total	Smart Grid City
Dec 12 Month			-						-	

93 **ADIT**

	Electric Intangible			Distribution Plant	General Plant	Common Intangible				Common General
	FERC 302	Smart Grid City	Total	Smart Grid City	Smart Grid City	FERC 302	CRS	OMS	Total	Smart Grid City
December			-						-	
December			-						-	
BOY/EOY Avg	-	-	-	-	-	-	-	-	-	-

101 **Generator Step ups**

	Gross Plant			Accum Depreciation & Amort			ADIT		
	Transmission GSU	Distribution GSU	General GSU	Transmission GSU	Distribution GSU	General GSU	Transmission GSU	Distribution GSU	General GSU
December									
January									
February									
March									
April									
May									

110	June									
111	July									
112	August									
113	September									
114	October									
115	November									
116	December									
117	13 Month Avg. (Lns 104 - 116)	-	-	-	-	-	-	-	-	-
118										
119					Depreciation Expense					
120					Transmission GSU	Distribution GSU	General GSU			
121										
122	Dec 12 Month									
123										
124										
125				Unamort Balance End of Current Year						
126								Unamort		
127		Unamort. Balance	Current Year			Unamort. Balance	Current Year	Balance		Land Held For Future
128		of Abandoned	Amortization			of Extraordinary	Amortization	End of		
		Incentive Plant (2)	Expense (2)			Property Loss (2)	Expense (2)	Current Year		Use (3)
129	December			-				-		
130	January			-				-		
131	February			-				-		
132	March			-				-		
133	April			-				-		
134	May			-				-		
135	June			-				-		
136	July			-				-		
137	August			-				-		
138	September			-				-		
139	October			-				-		

140	November			-			-			
141	December			-			-			
142	13 Month Avg. (Lns 129 - 141)	-	-	-	-	-	-			-
143										
144										

145 Note 1. ARO is not included in the budgeted amounts

146 Note 2. Abandoned Plant and Extraordinary Property Loss will remain at zero and can not be changes without a Section 205 filing.

147 Note 3. Plant Held for Future Use recovered in the formula will be limited to Transmission related land and land rights recorded in Account 105, Plant Held for Future Use.

148 Note 4. Source of Plant Adjustments: Company Records.

O-PSCo Formula Rate, Table 17, WP_C-1- Transmission O&M Version: 0.0.1 Effective: 11/17/2012

Public Service Company of Colorado **Table 17**
Transmission Formula Rate Settlement Template **WP_C-1**
Twelve Months Ended December 31, 20XX
Transmission O&M

Line No.		TRANSMISSION EXPENSES	Estimated Amounts Ref	Estimated Amounts Non Labor	Estimated Amounts Labor	Estimated Amounts Total	Actual Amounts Ref	Actual Amounts Non Labor	Actual Amounts Labor	Actual Amounts Total
				Col. (a)	Col. (b)	Col. (c)		Col. (a)	Col. (b)	Col. (c)
		OPERATION								
1	560	Supervision and Engineering	Company Records			-	321.83.b			-
2	561.1	Load Dispatching - Reliability	Company Records			-	321.85.b			-
3	561.2	Load Dispatching - Monitor & Operate Transmission System	Company Records			-	321.86.b			-
4	561.3	Load Dispatching - Transmission Service & Scheduling	Company Records			-	321.87.b			-
5	561.4	Scheduling, System Control & Dispatch Services	Company Records			-	321.88.b			-
6	561.5	Reliability, Planning and Standards Development	Company Records			-	321.89.b			-
7	561.6	Transmission Service Studies (1)	Company Records			-	321.90.b			-
8	561.7	Generation Interconnection Studies	Company Records			-	321.91.b			-
9	561.8	Reliability, Planning & Standards Development Services	Company Records			-	321.92.b			-
10	562	Station Expenses	Company Records			-	321.93.b			-
11	563	Overhead Line Expenses	Company Records			-	321.94.b			-
12	564	Underground Lines Expense	Company Records			-	321.95.b			-
13	565	Transmission of Electricity by Others	Company Records			-	321.96.b			-
14	566	Miscellaneous Transmission Expenses	Company Records			-	321.97.b			-
15	567	Rents	Company Records			-	321.98.b			-
16		Total Operation		-	-	-		-	-	-
17										
18		MAINTENANCE								
19	568	Supervision and Engineering	Company Records			-	321.101.b			-
20	569	Structures	Company Records			-	321.102.b			-
21	569.1	Computer Hardware	Company Records			-	321.103.b			-
22	569.2	Computer Software	Company Records			-	321.104.b			-
23	569.3	Communication Equipment	Company Records			-	321.105.b			-
24	569.4	Miscellaneous Regional Transmission Plant	Company Records			-	321.106.b			-
25	570	Station Equipment	Company Records			-	321.107.b			-
26	571	Overhead Lines (2)	Company Records			-	321.108.b			-
27	572	Underground Lines	Company Records			-	321.109.b			-
28	573	Miscellaneous Transmission Plant	Company Records			-	321.110.b			-
29		Total Maintenance		-	-	-		-	-	-

30										
31		TOTAL TRANSMISSION		-	-	-		-	-	-
32										
33										
34	565.25	System Integration Costs- Holy Cross TIEA (3)	Company Records	-	-	-	Company Records		-	-
35										
36	561	Total FERC Account 561	Sum Lines 2 - 9	-	-	-		-	-	-

Note 1. Amount reflects 3 year amortization of the pre-construction costs associated with the San Luis-Calumet-Comanche Transmission Line ($2,625,528 X 50% / 3 = $437,588) beginning November 17, 2012 as shown on FERC Form No. 1 page 321, line 90 footnote page. See additional details on Table 25 concerning the 50/50 Sharing.

Note 2. Amount will include a 3 year amortization of the total amount deferred related to Mountain Pine Beetle as shown on FERC Form No. 1 page 321, line 108 footnote page. $5,926,097 will be amortized over 3 years beginning January 1, 2013.
Note 3. The Holy Cross system integration surplus/deficit payments are difficult to project, therefore, PSCo makes no effort to budget these costs or include them in the ATRR Est. However, these payments will be included on actuals and in the ATRR Act. calculation.

O-PSCo Formula Rate, Table 18, WP_C-2- Admin and Gen Exps Version: 0.0.1 Effective: 11/17/2012

Public Service Company of Colorado **Table 18**
Transmission Formula Rate Settlement Template **WP_C-2**
Twelve Months Ended December 31, 20XX
Administrative and General Expenses

Estimated

Line No.	FERC	Account Description	Reference	Total	Adjustment	Adjusted Total
				Col. (a)	Col. (b)	Col. (c)
1	920	Administrative and general salaries	Company Records		$ -	$ -
2	921	Office supplies and expenses	Company Records		-	-
3	922	Administrative expenses transferred—Credit	Company Records		-	-
4	923	Outside services employed	Company Records		-	-
5	924	Property insurance	Company Records		-	-
6	925	Injuries and damages	Company Records		-	-
7	926	Employee pensions and benefits (1)	Company Records		-	-
8	927	Franchise requirements	Company Records		-	-
9	928	Regulatory commission expenses (2)	Company Records		-	-
10	929	Duplicate charges—Credit	Company Records		-	-
11	930.1	General Advertising Expenses (3)	Company Records		-	-
12	930.2	Miscellaneous general expenses (4)	Company Records		-	-
13	931	Rents	Company Records		-	-
14	935	Maintenance of general plant	Company Records		-	-
15		Subtotal		$ -	$ -	$ -

Notes:

1. Post-Employment Benefits Other than Pensions (FAS 106) shall remain as a stated, fixed amount and shall not be changed except as directed by the Commission following a filing seeking such change pursuant to section 205 or 206 of the FPA. The adjustment is shown on WP_C-3 PBOP. PSCo will file annually to seek FERC approval of the updated PBOP expense.
2. Regulatory Commission expenses (FERC Account 928) will be directly assigned to Transmission and are shown on WP_C-4.
3. General Advertising Expenses (FERC Account 930.1) will be excluded.
4. All industry assocation dues recorded in FERC Account 930.2 will be excluded.

Total Exclusion — Company Records

Actuals

Line No.	FERC	Account Description	Reference	Total	Adjustment	Adjusted Total
				Col. (a)	Col. (b)	Col. (c)

1	920	Administrative and general salaries	FF1, pg. 323, Line 181		$ -	$ -
2	921	Office supplies and expenses	FF1, pg. 323, Line 182		-	-
3	922	Administrative expenses transferred—Credit	FF1, pg. 323, Line 183		-	-
4	923	Outside services employed	FF1, pg. 323, Line 184		-	-
5	924	Property insurance	FF1, pg. 323, Line 185		-	-
6	925	Injuries and damages	FF1, pg. 323, Line 186		-	-
7	926	Employee pensions and benefits (1)	FF1, pg. 323, Line 187		-	-
8	927	Franchise requirements	FF1, pg. 323, Line 188		-	-
9	928	Regulatory commission expenses (2)	FF1, pg. 323, Line 189		-	-
10	929	Duplicate charges—Credit	FF1, pg. 323, Line 190		-	-
11	930.1	General Advertising Expenses (3)	FF1, pg. 323, Line 191		-	-
12	930.2	Miscellaneous general expenses (4)	FF1, pg. 323, Line 192		-	-
13	931	Rents	FF1, pg. 323, Line 193		-	-
14	935	Maintenance of general plant	FF1, pg. 323, Line 196		-	-
15		Subtotal		$ -	$ -	$ -

Notes:

1. Post-Employment Benefits Other than Pensions (FAS 106) shall remain as a stated, fixed amount and shall not be changed except as directed by the Commission following a filing seeking such change pursuant to section 205 or 206 of the FPA. The adjustment is shown on WP_C-3 PBOP. PSCo will file annually to seek FERC approval of the updated PBOP expense.
2. Regulatory Commission expenses (FERC Account 928) will be directly assigned to Transmission and are shown on WP_C-4.
3. General Advertising Expenses (FERC Account 930.1) will be excluded.
4. All industry assocation dues recorded in FERC Account 930.2 will be excluded.

Industry Association Dues	FF1, pg. 335, Line 1	
Service Company Allocation of Industry Associateion Dues	FF1, pg. 335, Line 14	
Total Exclusion		$ -

O-PSCo Formula Rate, Table 19, WP_C-3- PBOP (FAS 106) Version: 0.0.1 Effective: 11/17/2012

Public Service Company of Colorado
Transmission Formula Rate Settlement Template
Twelve Months Ended December 31, 20XX
Post-Employment Benefits Other than Pensions (FAS 106)

Table 19
WP_C-3

Line No.	Description	Total Expense	O&M $	O&M Electric $
		Col. (a)	Col. (b)	Col. (c)
1				
2				
3	PSCo Direct Expense			
4	XES - Allocated to PSCo			
5				
6	Total	-	-	-
7				
8				
9				
10				
11	PSCo Direct Expense			
12	XES - Allocated to PSCo			
13				
14	Total	-	-	-
15				
16				
17				
18	PSCo Direct Expense			
19	XES - Allocated to PSCo			
20				
21	Total	-	-	-
22				
23				
24				
25	PSCo Direct Expense			
26	XES - Allocated to PSCo			
27				
28	Total	-	-	-
29				
30	Adjustment			
31	Estimated Amount Less Base Year Amount (Line 14 minus 6)	-	-	-
32	Actual Amount Less Base Year Amount (Line 28 minus 21)	-	-	-

Notes:
Once established in the true-up for the first Formula Rate Year that rates are in effect, the amount for Post-Employment Benefits Other than Pensions shall be the amount recovered

in the formula rate until a change is accepted and permitted by FERC pursuant to a Section 205 filing (to be made annually to update the PBOP expense) or a Section 206 filing.

Source: Employee Benefit Accounting PBOP analysis and actuarial study filed annually with the Commission.

O-PSCo Formula Rate, Table 20, WP_C-4- FERC Account 928 Details Version: 0.0.1 Effective: 11/17/2012

Public Service Company of Colorado **Table 20**
Transmission Formula Rate Settlement Template **WP_C-4**
Twelve Months Ended December 31, 20XX
Regulatory Commission Expense Detail (FERC Account 928)

Estimated

Line No.	Description	Reference	Transmission Specific	Non-Transmission Related	Total
			Col. (a)	Col. (b)	Col. (c)
1					-
2					-
3					
4					-
5					-
6	Total		-	-	-
7					

Footnote 1: Rate Case Expenses will be amortized over 3 years beginning November 17, 2012.

Actual

Line No.	Description	Reference	Transmission Specific	Non-Transmission Related	Total
			Col. (a)	Col. (b)	Col. (c)
1					-
2					-
3					
4					
5					-
6					-
7	Total	FF1, pg 351, Ln 46	-	-	-

Footnote 1: Rate Case Expenses will be amortized over 3 years beginning November 17, 2012.

O-PSCo Formula Rate, Table 21, WP_D-1- Taxes Other Than Income Tax Version: 0.0.1 Effective: 11/17/2012

Public Service Company of Colorado **Table 21**
Transmission Formula Rate Settlement Template **WP_D-1**
Twelve Months Ended December 31, 20XX
Taxes Other Than Income Tax

Line No.	Description	Reference	Estimated	FERC Form No. 1 Reference	Actual
1	FUTA			263.4.i	
2	FICA			263.5.i	
3	Unemployment SESA			263.13.i	
4	Occupational Denver			263.22.i	
5	Total taxes related to wages & salaries (1)	Company Records			-
6					
7	Real and personal property taxes			263.20.i	
8	Use tax			263.12.i	
9	Total taxes related to property (1)	Company Records			-
10					
11	Miscellaneous				
12		Company Records			
13					
14	Total TOTI	Line 5 plus Line 9 plus Line 12	$ -	115.14.g	$ -

Note 1. The PSCo budget estimates these taxes only in total. Details as to actual taxes will be available for actuals in the Annual True-up.

O-PSCo Formula Rate, Table 22, WP_E-1- Revenue Credits Version: 0.0.1 Effective: 11/17/2012

Public Service Company of Colorado **Table 22**
Transmission Formula Rate Settlement Template **WP_E-1**
Twelve Months Ended December 31, 20XX
Revenue Credits

Estimated

Line No.	FERC	Description	Total	Adjustments	Adjusted Total
			Col. (a)	Col. (b)	Col. (c)
1	454- Rent From Electric Property				
2	45400	Rental Income on Transmission Facilities		$ -	$ -
3	45400	Rental Income on Other Facilities		-	-
4	Total 454		$ -	$ -	$ -
5					
6	421.1 Gain on disposition of property				
7	421.1	Amortization of the Gain on the Sale of TSB (Allocated to Transmission) Ref. WP_B-6 Line 15	$ -	$ -	$ -
8	421.1	Gain on disposition of property (Other Related)	-	-	-
9	Total 421.1		$ -	$ -	$ -

Actual

Line No.	FERC	Description	Total	Adjustments	Adjusted Total
			Col. (a)	Col. (b)	Col. (c)
1	454- Rent From Electric Property				
2	45400	Rental Income on Transmission Facilities		$ -	$ -
3	45400	Rental Income on Other Facilities		-	-
4	Total 454- FERC Form No. 1 pg. 300 Ln 19		$ -	$ -	$ -
5					
6	421.1 Gain on disposition of property				
7	421.1	Amortization of the Gain on the Sale of TSB (Allocated to Transmission) Ref. WP_B-6 Line 15	$ -	$ -	$ -
8	421.1	Gain on disposition of property (Other Related)		-	-
9	Total 421.1- FERC Form No. 1 pg. 117 Ln 40		$ -	$ -	$ -

O-PSCo Formula Rate, Table 23, WP_F-1- Revs from Trans. of Elect. of Others Version: 0.0.1 Effective: 11/17/2012

Public Service Company of Colorado **Table 23**

Transmission Formula Rate Template **WP_F-1**

Account 456.1- Revenues from Transmission of Electricity of Others

Ln No.	Estimate Type	Desc Service Type	Divisor kW	Point-to-Point Trans Schedules 7 & 8 FERC 456.05	Network Trans Schedule 9 FERC 456.07	Scheduling, System Control & Dispatch Schedule 1 FERC 456.12	Reactive Supply & Voltage Control Schedule 2 FERC 456.14	Regulation and Frequency Schedule 3 FERC 456.16	Network & Energy Imbalance Schedule 4 FERC 456.19	Network & Interco. Spinning Reserve Schedule 5 FERC 456.22	Supplemental Spinning Reserve Schedule 6 FERC 456.24	FERC Assess Pass Through FERC 456.26	Total of Line Items
			(a)	(b)	(c)	(d)	(e)	(f)	(g)	(h)	(i)	(j)	(k)
1													
2													
3													
4													
5													
6													
7		Total	-	0	0	0	0	0	0	0	0	0	0
	Summarized by Type:												
8	Credit		-	0	0	0	0	0	0	0	0	0	0
9	Divisor		-	0	0	0	0	0	0	0	0	0	0
10	Ancillary		-	0	0	0	0	0	0	0	0	0	0
11	Other		-	0	0	0	0	0	0	0	0	0	0
12	Total		-	0	0	0	0	0	0	0	0	0	0

Description of Revenue Types:

Ancillary	Ancillary services includes regulation & frequency, control & dispatch, voltage control, reactive, spinning reserve, and scheduling.
Divisor	Load associated with these revenues are included in the formula divisor.
Credit	Revenue credit because the load is not included in divisor.

Actuals Ln No.	Type	Desc/ Service Type	Divisor kW	Point to Point Trans Schedules 7 & 8 FERC 456.05	Network Trans Schedule 9 FERC 456.07	Scheduling, System Control & Dispatch Schedule 1 FERC 456.12	Reactive Supply & Voltage Control Schedule 2 FERC 456.14	Regulation and Frequency Schedule 3 FERC 456.16	Network & Energy Imbalance Schedule 4 FERC 456.19	Network & Interco. Spinning Reserve Schedule 5 FERC 456.22	Supplemental Spinning Reserve Schedule 6 FERC 456.24	FERC Assess Pass Through FERC 456.26	Total of Line Items
			(a)	(b)	(c)	(d)	(e)	(f)	(g)	(h)	(i)	(j)	(k)
1													-
2													-
3													-
4													
5													
6													
7													
		Total	-	-	-	-	-	-	-	-	-	-	-
	Summarized by Type:												
8	Credit		-	-	-	-	-	-	-	-	-	-	-
9	Divisor		-	-	-	-	-	-	-	-	-	-	-
10	Ancillary		-	-	-	-	-	-	-	-	-	-	-
11	Other		-	-	-	-	-	-	-	-	-	-	-
12	Total		-	-	-	-	-	-	-	-	-	-	-

Description of Revenue Types:

Ancillary	Ancillary services includes regulation & frequency, control & dispatch, voltage control, reactive, spinning reserve, and scheduling.
Divisor	Load associated with these revenues are included in the formula divisor.
Credit	Revenue credit because the load is not included in divisor.

O-PSCo Formula Rate, Table 24, WP_G-1- Capital Structure- Details Version: 0.0.1 Effective: 11/17/2012

Public Service Company of Colorado
Transmission Formula Rate Settlement Template

Table 24

WP_G-1

Twelve Months Ended December 31, 20XX

Capital Structure Details

Estimated

Line No.	Description	Form No.1 Ref	Dec	Jan	Feb	March	April	May	June	July	Aug	Sept	Oct	Nov	Dec	13 Month Avg.
			Col. (a)	Col. (b)	Col. (c)	Col. (d)	Col. (e)	Col. (f)	Col. (g)	Col. (h)	Col. (i)	Col. (j)	Col. (k)	Col. (l)	Col. (m)	Col. (n)
1	Long Term Debt:															
2	Acct 221 Bonds	112.18.c,d														-
3	Acct 223 Advances from Assoc. Companies	112.20.c,d														-
4	Acct 224 Other Long Term Debt	112.21.c,d														-
5	Less Acct 222 Reacquired Debt	112.19 c,d														-
6	Total Long Term Debt	Sum Lines 2 - 4 Less Line 5	-	-	-	-	-	-	-	-	-	-	-	-	-	-
7																
8	Preferred Stock (1)	112.3.c,d	0	0	0	0	0	0	0	0	0	0	0	0	0	-
9																
10	Common Equity- Per Books	112.16.c,d														-
11	Less Acct 204 Preferred Stock	112.3.c,d														-
12	Less Acct 219 Accum Other Compre. Income	112.15.c,d														-
13	Less Acct 216.1 Unappropriated Undistributed Subsidiary Earnings	112.12.c,d														-
14	Adjusted Common Equity	Ln 10 - 11 - 12 - 13	0	0	0	0	0	0	0	0	0	0	0	0	0	0
15																
16	Total (Line 6 plus Line 8 plus Line 14)		0	0	0	0	0	0	0	0	0	0	0	0	0	0
17																
18	Cost of Debt															
19	Acct 427 Interest on Long Term Debt	117.62.c														
20	Acct 428 Amortization of Debt Discount and Expense	117.63.c														

21	Acct 428.1 Amortization of Loss on Reacquired Debt	117.64.c	
22	Acct 430 Interest on Debt to Assoc. Companies (LTD portion only) (2)	117.67.c	
23	Less: Acct 429 Amort of Premium on Debt	117.65.c enter negative	
24	Less: Acct 429.1 Amort of Gain on Reacquired Debt	117.66.c enter negative	
25	Total Interest Expense	Sum Lines 19 - 24	0
26			
27	Average Cost of Debt (Line 25 / Line 6)		0.00%
28			
29	Cost of Preferred Stock		
30	Preferred Stock Dividends	118.29.c enter positive	
31			
32	Average Cost of Preferred Stock (Line 30 / Line 8)		0.00%

Note 1. If and when the Company issues preferred stock, footnote will indicate the authorizing regulatory agency, the docket/case number, and the date of the authorizing order.
Note 2. Interest on Debt to Associated Companies (FERC 430) will be populated with interest related to Long-Term Debt only.

Actual

Line No.	Description	Form No.1 Ref	Dec	Jan	Feb	March	April	May	June	July	Aug	Sept	Oct	Nov	Dec	13 Month Avg.
			Col. (a)	Col. (b)	Col. (c)	Col. (d)	Col. (e)	Col. (f)	Col. (g)	Col. (h)	Col. (i)	Col. (j)	Col. (k)	Col. (l)	Col. (m)	Col. (n)
1	Long Term Debt:															
2	Acct 221 Bonds	112.18.c,d														-
3	Acct 223 Advances from Assoc. Companies	112.20.c,d														-
4	Acct 224 Other Long Term Debt	112.21.c,d														-
5	Less Acct 222 Reacquired Debt	112.19 c,d														-
6	Total Long Term Debt	Sum Lines 2 - 4 Less	-	-	-	-	-	-	-	-	-	-	-	-	-	-

		Line 5														
7																
8	Preferred Stock (1)	112.3.c,d														-
9																
10	Common Equity- Per Books	112.16.c,d														-
11	Less Acct 204 Preferred Stock	112.3.c,d														-
12	Less Acct 219 Accum Other Compre. Income	112.15.c,d														-
13	Less Acct 216.1 Unappropriated Undistributed Subsidiary Earnings	112.12.c,d														-
14	Adjusted Common Equity	Ln 10 - 11 - 12 - 13	-	-	-	-	-	-	-	-	-	-	-	-	-	-
15																
16	Total (Line 6 plus Line 8 plus Line 14)		-	-	-	-	-	-	-	-	-	-	-	-	-	-
17																
18	Cost of Debt															
19	Acct 427 Interest on Long Term Debt	117.62.c														
20	Acct 428 Amortization of Debt Discount and Expense	117.63.c														
21	Acct 428.1 Amortization of Loss on Reacquired Debt	117.64.c														
22	Acct 430 Interest on Debt to Assoc. Companies (LTD portion only) (2)	117.67.c														
23	Less: Acct 429 Amort of Premium on Debt	117.65.c enter negative														
24	Less: Acct 429.1 Amort of Gain on Reacquired Debt	117.66.c enter negative														
25	Total Interest Expense	Sum Lines 19 - 24														-
26																
27	Average Cost of Debt (Line 25 / Line 6)															0.00%
28																
29	Cost of Preferred Stock															
30	Preferred Stock Dividends	118.29.c enter positive														-
31																
32	Average Cost of Preferred Stock (Line 30 / Line 8)															0.00%

Note 1. If and when the Company issues preferred stock, footnote will indicate the authorizing regulatory agency, the docket/case number, and the date of the authorizing order.

Note 2. Interest on Debt to Associated Companies (FERC 430) will be populated with interest related to Long-Term Debt only.

O-PSCo Formula Rate, Table 25, WP_H-1- Incentive Projects Version: 0.0.1 Effective: 11/17/2012

Public Service Company of Colorado **Table 25**
Transmission Formula Rate Settlement Template **WP_H-1**
Twelve Months Ended December 31, 20XX
Depreciation and Amortization Rates
Utility Plant, Regulatory Assets, & Regulatory Liabilities

FERC Account	Name	Depreciation/ Amortization Rate (%)
Regulatory Asset Amortization		
	San Luis- Calumet-Comanche Transmission Line: The total O&M incurred associated with the project prior to the decision not to proceed, was $2,625,528. The Wholesale share of 50% of this amount will be recovered in the formula rates over a 3 year period beginning with the effective date of the Formula Rate. The Wholesale share of the other 50% will be booked to Account No. 426.5 and absorbed by the Company.	36 Months
	Mountain Pine Beetle: Amounts deferred from 2010 through 2012 will be amortized over a 3 year period beginning January 1, 2013. The total amount to be amortized is $5,926,097.	36 Months
Regulatory Liability Amortization		
	Technical Services Building- The gain on the sale of TSB will be amortized over a 24 month period beginning with the effective date of the Formula Rate.	24 Months
Electric Plant Acquisition Adjustment- Calpine Acquisition		
114	Transmission Serving Transmission	
	Rocky Mountain Energy Center- Amortization of 55 years ending in 2065.	1.82
Electric Intangible		
302	Franchises and Consents	N/A[1]
303	Electric Intangible Software 5 Yr	20.00
303	Electric Intangible Software 10 Yr	10.00
Steam Production		
302	Franchises and Consents	3.33
302/303	Licenses	N/A[5]
310.2	Steam Production Land Rights	2.00
310.3	Steam Production Water Rights	2.00
311	Structures and Improvements	
	Arapahoe 3	2.28
	Arapahoe 4	4.89
	Arapahoe Unit C	6.47
	Cameo 1	1.93
	Cameo 2	1.96
	Cameo C	3.56
	Cherokee 1	21.33

	Cherokee 2	36.85
	Cherokee 3	7.07
	Cherokee 4	2.06
	Cherokee C	2.55
	Comanche 1	1.83
	Comanche 2	1.54
	Comanche 3	2.01
	Comanche C	1.68
	Craig 1	1.55
	Craig 2	1.53
	Craig C	1.58
	Hayden 1	1.87
	Hayden 2	1.53
	Hayden C	2.51
	Pawnee 1	1.57
	Pawnee C	2.86
	Valmont 5	6.74
	Valmont C	6.93
	Zuni 1	2.84
	Zuni 2	0.00
	Zuni C	3.31
312	Boiler Plant Equipment	
	Arapahoe 3	4.36
	Arapahoe 3 AQIR	15.84
	Arapahoe 4	6.39
	Arapahoe C	15.17
	Cameo 1	3.61
	Cameo 2	3.29
	Cameo C	2.87
	Cherokee 1	28.37
	Cherokee 2	45.08
	Cherokee 2 AQIR	59.98
	Cherokee 3	8.37
	Cherokee 3 AQIR	11.41
	Cherokee 4	1.91
	Cherokee 4 AQIR	6.67
	Cherokee C	3.06
	Cherokee C AQIR	6.67
	Comanche 1	2.17
	Comanche 2	2.01
	Comanche 3	2.01
	Comanche C	1.82
	Craig 1	1.66
	Craig 2	1.65
	Craig C	2.41
	Hayden 1	3.30
	Hayden 2	1.97
	Hayden C	2.85
	Pawnee 1	1.78
	Pawnee C	3.05
	Valmont 5	6.88
	Valmont 5 AQIR	8.95
	Valmont C	8.72
	Zuni 1	2.98
	Zuni 2	2.71

	Zuni C	3.43
312.2	Coal Cars	3.17
314	Turbogenerator Units	
	Arapahoe 3	2.58
	Arapahoe 4	7.66
	Arapahoe C	22.57
	Cameo 1	2.17
	Cameo 2	2.18
	Cameo C	4.49
	Cherokee 1	31.36
	Cherokee 2	39.51
	Cherokee 3	7.22
	Cherokee 4	1.94
	Cherokee C	5.07
	Comanche 1	1.90
	Comanche 2	1.83
	Comanche C	2.57
	Comanche 3	2.01
	Craig 1	2.82
	Craig 2	1.62
	Craig C	1.66
	Hayden 1	2.30
	Hayden 2	1.69
	Hayden C	3.04
	Pawnee 1	1.70
	Pawnee C	2.42
	Valmont 5	7.66
	Valmont C	9.97
	Zuni 1	2.99
	Zuni 2	16.65
	Zuni C	2.09
315	Accessory Electric Equipment	
	Arapahoe 3	4.66
	Arapahoe 4	4.27
	Arapahoe C	9.77
	Cameo 1	2.05
	Cameo 2	2.37
	Cameo C	3.24
	Cherokee 1	29.23
	Cherokee 2	45.26
	Cherokee 3	8.68
	Cherokee 4	1.78
	Cherokee C	2.16
	Comanche 1	1.71
	Comanche 2	1.81
	Comanche C	1.85
	Comanche 3	2.01
	Craig 1	1.62
	Craig 2	1.58
	Craig C	1.63
	Hayden 1	2.17
	Hayden 2	1.56
	Hayden C	2.77
	Pawnee 1	1.65
	Pawnee C	2.29

	Valmont 5	5.77
	Valmont C	7.52
	Zuni 1	2.76
	Zuni 2	2.96
	Zuni C	3.19
315.2	Boiler Controls	
	Arapahoe Unit 4	11.78
	Arapahoe C	5.53
	Cherokee 1	3.90
	Cherokee 2	3.67
	Cherokee 3	4.21
	Cherokee 4	4.72
	Cherokee C	3.47
	Comanche 1	4.02
	Comanche C	3.78
	Craig C	3.02
	Hayden 1	4.09
	Hayden 2	3.83
	Pawnee 1	3.09
	Pawnee C	2.78
	Valmont C	3.63
	Zuni C	7.66
316	Miscellaneous Power Plant Equipment	
	Arapahoe 4	8.71
	Arapahoe C	11.68
	Cameo 1	1.81
	Cameo 2	1.98
	Cameo C	2.84
	Cherokee 1	3.36
	Cherokee 2	67.52
	Cherokee 3	10.89
	Cherokee 4	1.60
	Cherokee C	2.34
	Comanche 1	1.51
	Comanche 2	1.49
	Comanche C	1.76
	Comanche 3	2.01
	Craig 1	1.58
	Craig 2	1.55
	Craig C	1.71
	Hayden 1	1.89
	Hayden 2	1.57
	Hayden C	2.56
	Pawnee 1	1.64
	Pawnee C	2.42
	Valmont 5	5.81
	Valmont C	5.96
	Zuni 1	5.20
	Zuni 2	0.00
	Zuni C	5.60
317	Asset Retirement Costs for Steam Production Plant	N/A[6]

Hydraulic Production

330	Hydro Production Land Rights	N/A[7]

331	Structures and Improvements	
	Ames	1.49
	Cabin Creek	1.06
	Georgetown	1.70
	Palisade	1.28
	Salida	1.84
	Shoshone	1.68
	Tacoma	1.41
332	Reservoirs, Dams and Waterways	
	Ames	1.56
	Cabin Creek	1.09
	Georgetown	2.31
	Salida	1.59
	Shoshone	0.86
	Tacoma	1.38
333	Water Wheels, Turbines and Generators	
	Ames	0.94
	Cabin Creek	1.23
	Georgetown	1.03
	Ouray	0.99
	Palisade	1.12
	Salida	0.71
	Shoshone	1.78
	Tacoma	1.85
334	Accessory Electric Equipment	
	Ames	2.47
	Cabin Creek	1.43
	Georgetown	1.61
	Palisade	1.70
	Salida	2.04
	Shoshone	2.31
	Tacoma	1.80
334.2	Computers	1.32
335	Miscellaneous Power Plant Equipment	
	Ames	1.83
	Cabin Creek	1.71
	Georgetown	2.88
	Salida	3.69
	Shoshone	2.83
	Tacoma	1.93
335.2	Recreation Facility	
	Ames	2.36
	Cabin Creek	1.55
	Georgetown	2.27
	Salida	3.33
	Tacoma	1.66
336	Road, RR, Bridge	
	Ames	2.40
	Cabin Creek	1.07
	Salida	2.67
	Shoshone	1.12
	Tacoma	1.33

Other Production

340	Other Production Land Rights	2.00

341	Structures and Improvements	
	Alamosa	4.63
	Blue Spruce 1	2.69
	Blue Spruce 2	2.69
	Blue Spruce C	2.69
	Fruita CT	0.89
	FSV GT 1	1.44
	FSV GT 2	2.34
	FSV GT 3	2.34
	FSV GT 4	2.49
	FSV GT 5	2.56
	FSV GT 6	2.56
	FSV GT C	1.72
	Ft Lupton CT	2.56
	Misc PP&E	2.34
	Rocky Mtn 1	2.85
	Rocky Mtn 2	2.85
	Rocky Mtn 3	2.85
	Rocky Mtn C	2.85
	Valmont CT	0.82
342	Fuel Holders, Products and Accessories	
	Alamosa	1.04
	Blue Spruce 1	2.69
	Blue Spruce 2	2.69
	Blue Spruce C	2.69
	Fruita CT	1.04
	FSV GT 1	2.48
	FSV GT 2	2.85
	FSV GT 3	2.89
	FSV GT 4	2.53
	FSV GT 5	2.56
	FSV GT 6	2.56
	FSV GT C	1.70
	Ft Lupton CT	3.89
	Rocky Mtn 1	2.85
	Rocky Mtn 2	2.85
	Rocky Mtn 3	2.85
	Rocky Mtn C	2.85
	Valmont CT	1.35
343	Prime Movers	
	Blue Spruce 1	2.69
	Blue Spruce 2	2.69
	Blue Spruce C	2.69
	FSV	2.07
	FSV GT 1	2.21
	FSV GT 2	2.32
	FSV GT 3	2.07
	FSV GT 4	2.07
	FSV GT 5	2.56
	FSV GT 6	2.56
	FSV GT C	2.73
	Rocky Mtn 1	2.85
	Rocky Mtn 2	2.85
	Rocky Mtn 3	2.85
	Rocky Mtn C	2.85

344	Generators	
	Alamosa	1.62
	Blue Spruce 1	2.69
	Blue Spruce 2	2.69
	CO Wind Power	6.67
	Fruita CT	1.03
	FSV GT 1	1.42
	FSV GT 2	2.42
	FSV GT 3	2.73
	FSV GT 4	2.69
	FSV GT 5	2.56
	FSV GT 6	2.56
	FSV GT C	2.69
	Ft Lupton CT	4.03
	Rocky Mtn 1	2.85
	Rocky Mtn 2	2.85
	Rocky Mtn 3	2.85
	Valmont CT	1.90
345	Accessory Electric Equipment	
	Alamosa	3.75
	Blue Spruce 1	2.69
	Blue Spruce 2	2.69
	Blue Spruce C	2.69
	Fruita CT	4.20
	FSV GT 1	1.44
	FSV GT 2	2.21
	FSV GT 3	2.21
	FSV GT 4	2.54
	FSV GT 5	2.56
	FSV GT 6	2.56
	FSV GT C	2.70
	Ft Lupton CT	1.37
	Rocky Mtn 1	2.85
	Rocky Mtn 2	2.85
	Rocky Mtn 3	2.85
	Rocky Mtn C	2.85
	Valmont CT	4.55
345.2	Computers	
	FSV GT 1	1.71
	FSV GT 2	2.21
	FSV GT 3	0.23
	FSV GT C	2.20
346	Miscellaneous Power Plant Equipment	
	Alamosa	0.98
	Blue Spruce 1	2.69
	Blue Spruce 2	2.69
	Blue Spruce C	2.69
	Fruita CT	1.13
	FSV GT 1	1.49
	FSV GT 2	1.88
	FSV GT 3	1.88
	FSV GT 4	2.52
	FSV GT 5	2.56
	FSV GT 6	2.56
	FSV GT C	2.63

	Ft Lupton	1.46
	Rocky Mtn 1	2.85
	Rocky Mtn 2	2.85
	Rocky Mtn 3	2.85
	Rocky Mtn C	2.85
	Valmont CT	4.84
347	Asset Retirement Costs for Other Production Plant	N/A[6]
Electric Transmission		
350.2	Land Rights	1.03
352	Structures & Improvements	1.44
353	Station Equipment	1.78
354	Towers & Fixtures	1.18
355	Poles & Fixtures	1.64
356	OH Conductors & Devices	1.79
357	UG Conduit	1.94
358	UG Conductors & Devices	1.88
359	Roads & Trails	0.97
Electric Distribution		
360.1	Land	
360.2	Land Rights	1.09
361	Structures & Improvements	1.71
361.1	Structures & Improvements-Production	1.71
362	Station Equipment	2.05
362.1	Station Equipment-Production	2.05
364	Poles, Towers & Fixtures	3.65
365	OH Conductors & Devices	3.31
366	UG Conduit	1.99
367	UG Conductors & Devices	2.05
368	Line Transformers	2.21
369	Services	2.33
369.1	Services-Overhead	2.33
369.2	Services-Underground	2.33
370	Meters	3.97
370.2	AMR Equipment	8.81
371	Installation on Customer Premises	1.00
373	Street Lighting & Signal Systems	2.95
Electric General		
389	General Land Rights	N/A[2]
390	Structures and Improvements	4.88
390.1	General Buildings	2.98
390.2	Partitions	7.69
391	Office, Furniture and Equipment	4.75
391.1	Leased Partitions	5.00
391.2	Computers	20.00
392	Transportation Equipment	9.00
393	Stores Equipment	3.17
394	Tools Shop Equipment	3.80
395	Laboratory Equipment	9.50
396	Power Operated Equipment	9.00
397	Communications Equipment	6.67
398	Miscellaneous Equipment	5.00

Common Intangible

302	Franchises and Consents – Non-Unitized	3.33
302	Franchises and Consents	N/A[3]
303	Electric Intangible Software 5 Yr	20.00
303	Electric Intangible Software 10 Yr	10.00

Common General

389	General Land Rights	N/A[4]
390	Structures and Improvements	2.73
390	Structures and Improvements-Owned Building	1.64
390	Structures and Improvements-TSB	6.06
390	Structures and Improvements- Non-Unitized	6.06
390	1800 Larimer Leasehold Improvements	6.67
390.2	Partitions	3.80
391	Office, Furniture and Equipment	4.75
391	Leased Partitions	5.00
391	Computers 3 Year	33.35
391	Computers 5 Year	20.00
392	Transportation Equipment	9.00
393	Stores Equipment	3.17
394	Tools Shop Equipment	3.80
395	Laboratory Equipment	9.50
396	Power Operated Equipment	9.00
397	Communications Equipment	6.67
398	Miscellaneous Equipment	5.00

Notes:

1 The Depreciation Rates were approved in Docket ER08-224-000 and Docket ER11-2853 and will not change absent a 205 or 206 filing.

2 Electric Intangible Franchises are amortized over the life of the Franchise Agreement.

3 No Electric General Land Rights at December 31, 2010. To the extent PSCo acquires land rights, PSCo will make a section 205 FPA filing for approval of the depreciation rates.

4 Common Intangible Franchises are amortized over the life of the Franchise Agreement.

5 No Common General Land Rights at December 31, 2010. To the extent PSCo acquires land rights, PSCo will make a section 205 FPA filing for approval of the depreciation rates.

6 Licenses are amortized over the License term.

7 Asset Retirement Costs are not included in FERC-only Depreciation Rates.

There are no Hydro Land Rights as of December 31, 2010. To the extent PSCo acquires land rights, PSCo will make a section 205 FPA filing under the FPA for approval of the depreciation rates.

O-PSCo Formula Rate, Table 26, WP_I-1- Trans Sys Peak Demand Summary Version: 0.0.1 Effective: 11/17/2012

Public Service Company of Colorado **Table 26**
Transmission Formula Rate Settlement Template **WP_I-1**
Twelve Months Ended December 31, 20XX
Transmission System Peak Demand Summary

Estimated System Peak Demand Summary

Line No.	System Peak Date & Time	Generation Peak kW	Delete Generation Step-up Loss at Peak kW	Delete TIE Agmt Sales Load At Peak kW	Add Comanche 3 IREA at Peak kW	Add 3rd Party Transmission Network Load kW	Add Transmission Reserved Capacity kW	Transmission Peak kW
		Col. (a)	Col. (b)	Col. (c)	Col. (d)	Col. (e)	Col. (f)	Col. (g)
1								-
2								-
3								-
4								-
5								-
6								-
7								-
8								-
9								-
10								-
11								-
12								-
13	12 Month Total	-	-	-	-	-	-	-
14								
15	12 Month Average	-	-	-	-	-	-	-

Actual System Peak Demand Summary

Line No.	System Peak Date & Time	Transmission Peak kW (1)	Delete TIE Agmt Sales Load At Peak kW	Delete Company Use kW	Transmission Peak kW
		Col. (a)	Col. (b)	Col. (c)	Col. (d)
1					-
2					-
3					-
4					-
5					-
6					-
7					-
8					-

9					-
10					-
11					-
12					-
13	12 Month Total	-	-	-	-
14					
15	12 Month Average	-	-	-	-

Footnote 1. Amount in column (a) includes the Lamar DC tie

O-PSCo Formula Rate, Table 27,Schedule 1 Version: 0.0.1 Effective: 11/17/2012

Public Service Company of Colorado **Table 27**
Transmission Formula Rate Settlement Template **Schedule 1**
Ancillary Services, Schedule No. 1 -
Scheduling System Control and Dispatch Service

Line No.	Description	Reference	Amount	
1	**A. Schedule 1 - Estimated ARR for Billing Period 01/01/20XX to 12/31/20XX**			
2	Total Load Dispatch and Scheduling (Account 561)	WP_C-1 Lines 2 through 9	$0	
3	Less: Scheduling, System Control & Dispatch Services (Account 561.4)	WP_C-1 Line 5	$0	
4	Less: Reliability, Planning and Standards Development (Account 561.5)	WP_C-1 Line 6	$0	
5	Less: Transmission Service Studies (Account 561.6)	WP_C-1 Line 7	$0	
6	Less: Generation Interconnection Studies (Account 561.7)	WP_C-1 Line 8	$0	
7	Less: Reliability, Planning & Standards Development Services (Account 561.8)	WP_C-1 Line 9	$0	
8	Total 561 Costs for Projected Schedule 1 ARR	Sum Lines 2 through 7	$0	
9				
10	Less: Schedule 1 Point to Point Estimated Revenues	WP_F-1 Line 36	$0	
11				
12	Estimated Schedule 1 ARR	(Ln 8 - Ln 10)	$0	
13				
14	**B. Schedule 1 Estimated Rate Calculations**			
15	Estimated Average 12-Mo. Demand	WP_I-1 Line 15	0	kW
16				
17	Monthly Point to Point Rate in $/kW - Month	((Line 12 /Line 15) /12)	$0.000	kW
18	Weekly Point to Point Rate in $/kW - Weekly	((Line 12 /Line 15) /52)	$0.000	kW
19	Daily Point to Point Rate in $/kW - Day	((Line 12 /Line 15) /365)	$0.000	kW
20	Hourly Point to Point Rate in $/mW - Hourly	((Line 12 /Line 15) /8760 * 1000)	$0.000	mW
21				
22				
23				
24	**C. Schedule 1 - Actual ARR for the Billing Period 01/01/20XX to 12/31/20XX**			
25	Total Load Dispatch and Scheduling (Account 561)	WP_C-1 Lines 2 through 9	$0	
26	Less: Scheduling, System Control & Dispatch Services (Account 561.4)	WP_C-1 Line 5	$0	
27	Less: Reliability, Planning and Standards Development (Account 561.5)	WP_C-1 Line 6	$0	
28	Less: Transmission Service Studies (Account 561.6)	WP_C-1 Line 7	$0	
29	Less: Generation Interconnection Studies (Account 561.7)	WP_C-1 Line 8	$0	
30	Less: Reliability, Planning & Standards Development Services (Account 561.8)	WP_C-1 Line 9	$0	
31	Total 561 Costs for Actual Schedule 1 ARR	Sum Lines 25 through 30	$0	
32				
33	Less: Schedule 1 Point to Point Actual Revenues Billed	WP_F-1 Line 42	$0	
34				
35	Actual Schedule 1 ARR	(Ln 31 - Ln 33)	$0	
36				
37	**D. Schedule 1 Actual Rate Calculations**			
38	Actual Average 12-Mo. Demand	WP_I-1 Line 15	0	kW
39				
40	Monthly Point to Point Rate in $/kW - Month	((Line 35 /Line 38) /12)	$0.000	kW
41	Weekly Point to Point Rate in $/kW - Weekly	((Line 35 /Line 38) /52)	$0.000	kW

42	Daily Point to Point Rate in $/kW - Day	((Line 35 /Line 38) /365)	$0.000	kW
43	Hourly Point to Point Rate in $/mW - Hourly	((Line 35 /Line 38) /8760 * 1000)	$0.000	mW

O-PSCo Formula Rate, Table 28, Schedule 2 Version: 0.0.1 Effective: 11/17/2012

Public Service Company of Colorado **Table 28**
Transmission Formula Rate Settlement Template **Schedule 2**
Ancillary Services, Schedule No. 2 -
Reactive Supply and Voltage Control From Generation Source Services

Line No	Description		Amount	Reference/Notes
1	**Annual Cost of Reactive Power Equipment**			
2	Acct 314	Steam Turbogenerators		Most recent FF1, Pg 205, Ln 12
3	Acct 344	CT Generators		Most recent FF1, Pg 205, Ln 41
4	Subtotal of Production Accounts 314 & 344		$0	Line 2 + Line 3
5	Percent of Production Plant for Dual Use		20%	
6	Dual use of Production Accounts 314 & 344		$0	Line 4 * Line 5
7	Generation Step Ups			Most recent FF1, Footnote, Page 204, Line 58
8	Total Dual Use Production Plant		$0	Line 6 + Line 7
9	Dual Use Plant Alloc. To Reactive Power		$0	Line 34 * Line 8
10	Fixed Charge Rate (including O&M) for all Production Plant		0.0000	WP_FCR Line 21
11	Annual Cost of Reactive Power Equipment		$0	Line 9 * Line 10
12	**Revenue Requirement for Real Power losses related to reactive power equipment**			
13	Total Production Plant Investment		$0	WP_FCR Line 50
14	Less: Dual Use Plant Alloc. To Reactive Power		$0	Line 9
15	Net Production Plant		$0	Line 13 - Line 14
16	Fixed Charge Rate (including O&M) for all Production Plant		-	WP_FCR Line 21
17	Total Production Plant Revenue Requirement including O&M		$0	Line 15 * Line 16
18	Real Power Losses		0.15%	Fixed Value
19	Revenue Requirement for Real Power losses related to reactive power equipment		$0	Line 17 * Line 18
20	**Total Revenue Requirement for Reactive Power**		$0	Line 11 + Line 19
21	Average of 12 Month Coincident Peaks			Prior Year's True-up Formula Template
22	**Rates**			

23	Annual Reactive Power Charge	$0.000	$ per kW - Year (Line 20 / Line 21)
24	Monthly Point-to-Point Delivery	$0.000	$ per kW - Month (Line 23 / 12)
25	Weekly Point-to-Point Delivery	$0.000	$ per kW - Week (Line 23 / 52)
26	Daily Point-to-Point Delivery On-Peak	$0.000	$ per kW - day (Line 25 / 6)
27	Daily Point-to-Point Delivery Off-Peak	$0.000	$ per kW - day (Line 25 / 7)
28	Hourly Point-to-Point Delivery On-Peak	$0.000	$ per MWh ((Line 26 / 16) X 1000)
29	Hourly Point-to-Point Delivery Off-Peak	$0.000	$ per MWh ((Line 27 / 24) X 1000)
30	Network Integration Delivery	$0.000	$ per kW - Month (Line 23)

31	PSCO Total Rated Capacity =		kVA
32	PSCO Total Generator Net Max. =		kW
33	PSCO Total VAR Rating =		kVAR
34	% of Plant dedicated to VAR Production is = (kVAR^2 / kVA^2) X 100 =		0.0000%

O-PSCo Formula Rate, Table 29, Schedule 3 Version: 0.0.1 Effective: 11/17/2012

Public Service Company of Colorado **Table 29**

Transmission Formula Rate Settlement Template **Schedule 3**
Ancillary Services, Schedule No. 3 -
Regulation and Frequency Response Service

Line No	Plant	Total Cost (1)	Total dual use for VAR Production (2)	Cost of plant / Total Cost (a) / Ln 19	Total dual use for VAR Production per Plant (b x c)	Total Cost for Reg. and Freq. Response Serv.. (a) - (d)	Unity = Plants Selected for Regulation and Frequency Resp. Service (3)	Prod. FCR with O&M (4)	Annual Cost of Gen. Plnt.. to provide Svc. (e) * (f) * (g)	Gen. Max Name Plate (kW) (1)
		col. (a)	col. (b)	col. (c)	col. (d)	col. (e)	col. (f)	col. (g)	col. (h)	col. (i)
1	0	$ -	$ -	0.00000	$ -	$ -		0.0000	$ -	0
2	0	-	-	0.00000	-	-		0.0000	-	0
3	0	-	-	0.00000	-	-		0.0000	-	0
4	0	-	-	0.00000	-	-		0.0000	-	0
5	0	-	-	0.00000	-	-		0.0000	-	0
6	0	-	-	0.00000	-	-		0.0000	-	0
7	0	-	-	0.00000	-	-		0.0000	-	0
8	0	-	-	0.00000	-	-		0.0000	-	0
9	0	-	-	0.00000	-	-		0.0000	-	0
10	0	-	-	0.00000	-	-		0.0000	-	0
11	0	-	-	0.00000	-	-		0.0000	-	0
12	0	-	-	0.00000	-	-		0.0000	-	0
13	0			0.0000				0.0000		0

		-	-	0	-	-			-	
14	0	-	-	0.0000 0	-	-		0.0000	-	0
15	0	-	-	0.0000 0	-	-		0.0000	-	0
16	0	-	-	0.0000 0	-	-		0.0000	-	0
17	0	-	-	0.0000 0	-	-		0.0000	-	0
18	0	-	-	0.0000 0	-	-		0.0000	-	0
19		$ -		0.0000 0	$ -	$ -			$ -	0

20	Note: (1) WP_Cost per Unit			
21	(2) Schedule 2 Line 8 (3) 1 = Yes; 2 = No	Average Generation Unit Cost to Provide Service	$0.000	per kW year (Col. (h) ln 19 / Col. (i) Ln 19)
22	(4) WP_FCR Line 21	Monthly Point-to-Point Delivery	$0.000	per kW month (Line 21 / 12)
23		Weekly Point-to-Point Delivery	$0.000	per kW week (Line 21 / 52)
24		Daily Point-to-Point Delivery On-Peak	$0.000	per kW day (Line 23 / 6)
25		Daily Point-to-Point Delivery Off-Peak	$0.000	$ per kW - day (Line / 7)
26		Hourly Point-to-Point Delivery On-Peak	$0.000	per MWh ((Line 24 / 16) X 1000)
27		Hourly Point-to-Point Delivery Off-Peak	$0.000	$ per MWh ((Line 27 / 24) X 1000)
28		Network Integration Delivery	$0.000	per kW month (Line 22)

O-PSCo Formula Rate, Table 30, Schedule 5 Version: 0.0.1 Effective: 11/17/2012

Public Service Company of Colorado

Transmission Formula Rate Settlement Template
Ancillary Services, Schedule No. 5 -
Operating Reserve - Spinning Reserve Service

Table 30 Schedule 5

Line No.	Plant	Total Cost (1)	Total dual use for VAR Production (2)	Cost of plant / Total Cost (a) / Ln 19	Total dual use for VAR Production per Plant (b x c)	Total Cost for Reg. and Freq. Response Serv.. (a) - (d)	Unity = Plants Selected for Op Res Spinning Reserve (3)	Prod. FCR with O&M (4)	Annual Cost of Gen. Plnt.. To provide Svc. (e) X (f) * (g)	Gen. Max Name Plate (kW) (1)
		col. (a)	col. (b)	col. (c)	col. (d)	col. (e)	col. (f)	col. (g)	col. (h)	col. (i)
1	0	$ -	$ -	0.00000	$ -	$ -		0	$ -	0
2	0	-	-	0.00000	-	-		0	-	0
3	0	-	-	0.00000	-	-		0	-	0
4	0	-	-	0.00000	-	-		0	-	0
5	0	-	-	0.00000	-	-		0	-	0
6	0	-	-	0.00000	-	-		0	-	0
7	0	-	-	0.00000	-	-		0	-	0
8	0	-	-	0.00000	-	-		0	-	0
9	0	-	-	0.00000	-	-		0	-	0
10	0	-	-	0.00000	-	-		0	-	0
11	0	-	-	0.00000	-	-		0	-	0
12	0	-	-	0.00000	-	-		0	-	0
13	0	-	-	0.00000	-	-		0	-	0
14	0	-	-	0.00000	-	-		0	-	0
15	0			0.00000				0		0

		-	-		-	-			-	
16	0	-	-	0.00000	-	-		0	-	0
17	0	-	-	0.00000	-	-		0	-	0
18	0	-	-	0.00000	-	-		0	-	0
19		$ -		0.00000	$ -	$ -			$ -	0

20	Note: (1) WP_Cost per Unit			
21	(2) Schedule 2 Line 8 (3) 1 = Yes; 2 = No	Average Generation Unit Cost to Provide Service	$0.000	per kW year (Col. (h) ln 19 / Col. (i) Ln 19)
22	(4) WP_FCR Line 21	Monthly Point-to-Point Delivery	$0.000	per kW month (Line 21 / 12)
23		Weekly Point-to-Point Delivery	$0.000	per kW week (Line 21 / 52)
24		Daily Point-to-Point Delivery On-Peak	$0.000	per kW day (Line 23 / 6)
25		Daily Point-to-Point Delivery Off-Peak	$0.000	$ per kW - day (Line / 7)
26		Hourly Point-to-Point Delivery On-Peak	$0.000	per MWh ((Line 24 / 16) X 1000)
27		Hourly Point-to-Point Delivery Off-Peak	$0.000	$ per MWh ((Line 27 / 24) X 1000)
27		Network Integration Delivery	$0.000	per kW month (Line 22)

O-PSCo Formula Rate, Table 31, Schedule 6 Version: 0.0.1 Effective: 11/17/2012

Public Service Company of Colorado **Table 31**
Transmission Formula Rate Settlement Template **Schedule 6**
Ancillary Services, Schedule No. 6 -
Operating Reserve - Supplemental Reserve Service

Line No.	Plant	Total Cost (1)	Total dual use for VAR Production (2)	Cost of plant / Total Cost (a) / Ln 19	Total dual use for VAR Production per Plant (b x c)	Total Cost for Oper. Reserve Supplemental (a) - (d)	Unity = Plants Selected Oper. Reserve Spinning Serv. (2)	Prod. FCR with O&M (4)	Annual Cost of Selected Plant to Provide Service (e) * (f) * (g)	Gen. Max Name Plate (kW)
		col. (a)	col. (b)	col. (c)	col. (d)	col. (e)	col. (f)	col. (g)	col. (h)	col. (i)
1	0	$ -	$ -	0.00000	$ -	$ -		0.0000	$ -	0
2	0	-	-	0.00000	-	-		0.0000	-	0
3	0	-	-	0.00000	-	-		0.0000	-	0
4	0	-	-	0.00000	-	-		0.0000	-	0
5	0	-	-	0.00000	-	-		0.0000	-	0
6	0	-	-	0.00000	-	-		0.0000	-	0
7	0	-	-	0.00000	-	-		0.0000	-	0
8	0	-	-	0.00000	-	-		0.0000	-	0
9	0	-	-	0.00000	-	-		0.0000	-	0
10	0	-	-	0.00000	-	-		0.0000	-	0
11	0	-	-	0.00000	-	-		0.0000	-	0
12	0	-	-	0.00000	-	-		0.0000	-	0
13	0	-	-	0.00000	-	-		0.0000	-	0
14	0	-	-	0.00000	-	-		0.0000	-	0
15	0	-	-	0.00000	-	-		0.0000	-	0

16	0	-	-	0.0000 0	-	-		0.0000	-	0
17	0	-	-	0.0000 0	-	-		0.0000	-	0
18	0	-	-	0.0000 0	-	-		0.0000	-	0
19		$ -		0.0000 00	$ -	$ -			$ -	0

20 Notes:

(1) WP_Cost per Unit

21	(2) Schedule 2 Line 8	Average Generation Unit Cost to Provide Service	$0.000	per kW year (Col. (h) ln 19 / Col. (i) Ln 19)
	(3) 1 = Yes; 2 = No			
22	(4) WP_FCR Line 21	Monthly Point-to-Point Delivery	$0.000	per kW month (Line 21 / 12)
23		Weekly Point-to-Point Delivery	$0.000	per kW week (Line 21 / 52)
24		Daily Point-to-Point Delivery On-Peak	$0.000	per kW day (Line 23 / 6)
25		Daily Point-to-Point Delivery Off-Peak	$0.000	$ per kW - day (Line / 7)
26		Hourly Point-to-Point Delivery On-Peak	$0.000	per MWh ((Line 24 / 16) X 1000)
27		Hourly Point-to-Point Delivery Off-Peak	$0.000	$ per MWh ((Line 27 / 24) X 1000)
27		Network Integration Delivery	$0.000	per kW month (Line 22)

O-PSCo Formula Rate, Table 32, WP_FCR- Fixed Charge Rate Wksht ("FCR") Version: 0.0.2 Effective: 11/17/2012

Public Service Company of Colorado **Table 32**

Transmission Formula Rate Settlement Template **WP_FCR**

Fixed Charge Rate Worksheet ("FCR")

12 Months Ended December 31, 2010

Line No.		Production	Reference
1	(1) O&M	0.00000	Line 56
2			
3	(2) Other Taxes	0.00000	Line 69
4			
5	(3) A&G	0.00000	Line 83
6			
7	(4) Return (1)	0.00000	Line 133
8			
9	(5) Depreciation (1)	0.00000	Line 148
10			
11	(6) Composite Income Tax	0.00000	Line 152
12			
13	(7) General & Intangible Plant	0.00000	Line 173
14			
15	(8) Cash Working Capital	0.00000	Line 179
16			
17	(9) ADIT Adjustment	0.00000	Line 200
18			
19	(10) Materials & Supplies	0.00000	Line 213
20			
21	**FIXED CHARGE RATE**	**0.00000**	
22			
23	Note: 1. Return on Equity and the Depreciation rates cannot change without a Section 205 or 206 filing.		
24			
25	**(1) O&M Expense:**	**Reference (2)**	**$ Amount**
26			
27	A. Total Power Production Expenses	Pg 321, Ln 80b	
28			
29			-
30	B. Purchased Power Expenses (Acct. 555)	Pg 321.76b	
31			
32			
33	C. Energy Related O&M		
34	Account 501	Pg 320, Ln 5b	
35	Account 503	Pg 320, Ln 7b	
36	Account 504	Pg 320, Ln 8b	
37	Account 509	Pg 320, Ln 9b	
38	Account 510	Pg 320, Ln 15b	
39	Account 512	Pg 320, Ln 17b	
40	Account 513	Pg 320, Ln 18b	

41		Account 518	Pg 320, Ln 25b	
42		Account 528	Pg 320, Ln 35b	
43		Account 530	Pg 320, Ln 37b	
44		Account 531	Pg 320, Ln 38b	
45		Account 544	Pg 320, Ln 56b	
46		Account 547	Pg 321, Ln 63b	
47		Total C	Sum Line 34 - Line 46	-
48				
49		D. Total Production Plant Investment		
50		Total Production Plant	Pg 205, Ln 46g	
51		Less: Production ARO	Pg 205, -Ln 15g	
52		Plus Generator Step Ups	Schedule 2 Line 7	0
53				
54		Total D	Sum Line 50 - Line 52	0
55				
56		Production O&M FCR	(A-B-C)/D =	0.00000
57				
58	**(2)**	**OTHER TAXES EXPENSE**		
59				
60		A. Other Taxes (Electric Only)	Pg 115, Ln 14g	
61				
62		B. Total Electric Plant in Service		
63		Electric Plant in Service	Pg 207, Ln 100g	
64		Less ARO	Pg 207,Ln 15, Ln 34 Ln 44, Ln 57, Ln 74, Ln 83, Ln 98	
65		Plus Common Electric Plant in Service	Pg 356	
66		Plus Total Acquisition Adjustment	WP_B-4 Line 15 ,Col. (d)	0
67		Total Electric Plant in Service	Sum Line 63 - Line 66	0
68				
69		Other Taxes FCR	A/B	0.00000
70				
71	**(3)**	**A&G EXPENSE**		
72				
73		A. Production Wages Expense	Pg 354, Ln 20b	
74				
75		B. A&G Wages Expense	Pg 323, Ln 181b	
76				
77		C. Total Wages Expense	Pg 354, Ln 28b	
78				
79		D. Total A&G related O&M	Pg 323, Ln 197b	
80				
81		E. Total Production Plant Investment	Line 54	0
82				
83		A&G Expense FCR	(A/(C-B))*D/E	0.00000
84				
85				

Note 2. All page references are to FERC Form No. 1.

			Reference (2)	$ Amount
86	(4)	**RATE OF RETURN WORKSHEET**		
87				
88				
89		A. Common Equity Calculation		
90				
91		Proprietary Capital	Pg 112 Ln 16c	
92				
93		Less: Preferred Stock Issued	Pg 112 Ln 3c	
94				
95		Less: Account No. 216.1	Pg 112 Ln 12c	
96				
97		Less: Accum other comprehensive Income	Pg 112 Ln 15	
98				
99		Common Equity =	Line 91 - 93 - 95 - 97	0
100				
101		B. Rate of Return Calculation		
102				
103		Long Term Debt	pg.112, sum of 18c thru 21c	
104				
105		Preferred Stock	(Pg.112 Ln 3c)	
106				
107		Common Equity	Line 99	0
108				
109		Total Capital =	Line 103 + 105 + 107	0
110				
111		C. Cost of Debt		
112		Interest on Long Term Debt	Pg 117 Ln 62c	
113		Interest on Debt to Assoc. Companies (LTD portion only)	Pg 117 Ln 67c	
114		Amortization of Debt Discount and Expense	Pg 117 Ln 63c	
115		Amortization of Loss on Reacquired Debt	Pg 117 Ln 64c	
116		Less: Amort of Premium on Debt	Pg 117 Ln 65c	
117		Less: Amort of Gain on Reacquired Debt	Pg 117 Ln 66c	
118		Total Interest Expense		0
119				
120		Average Cost of Debt (Line 118 / Line 103)		0.00%
121				
122		D. Cost of Preferred Stock		
123		Preferred Stock Dividends	Pg 118 Ln 29c	
124				
125		Average Cost of Preferred Stock (Line 123 / Line 105)		
126				

			CAPITAL STRUCTURE		
127					
128					Weighted Cost
129		Amount	%	%	Of Capital %
130	Long Term Debt	$0	0.00%	0.00%	0.00%
131	Preferred Stock	$0	0.00%	0.00%	0.00%

132	Common Equity (1)	$0	0.00%	9.72%	0.00%
133	Total	$0	0%	ROR=	0.00%
134					
135					
136					
137					
138	**(5)** **DEPRECIATION EXPENSE**		**Reference (2)**		**$ Amount**
139					
140	Production Depreciation Expense		Pg 336 Lns 2-6b		
141					
142	Total Production Plant Investment		Line 54		0
143					
144	SLDp =		Line 140 / 142		0.00000
145					
146	n =		1 / Line 144		0.000
147					
148	SFDp =		R/(1+R)^n-1		0.00000
149					
150	**(6)** **COMPOSITE INCOME TAX EXPENSE**				
151					
152	Production CIT=				0.00000
153	Formula: (35/65+State Tx)/(1-State Tx)*(ROR+SFD-SLD)*(1-Wtd.LTD/ROR)				
154	State Tax Rate				
155					
156					
157					
158					
159					
160					
161					
162	**(7) General & Intangible Plant**				
163					
164					
165	Production Wages Expense		Line 73		-
166	Total Wage Expense Less A&G Wage expenses		Line 77 - Line 75		-
167	Production W/S Allocator		Line 165 / Line 166		0.00%
168	General & Intangible plant		Pg 205 and 207, Lns5G + 96 G		
169	General & Intangible plant allocated to Production		Line 167 * Line 168		-
170	Revenue Requirement FCR		Line 3 + 7 + 9 + 11 + 17 + 19		0.000%
171	General & Intangible Plant Revenue Requirement		Line 169 * Line 170		-
172	Total Production Plant Investment		Line 50		-
173	General & Intangible Plant FCR		Line 171 / Line 172		-
174					
175					
176	**(8) Cash Working Capital**				
177					
178					
179	Cash Working Capital will be set at				

		and remain $0 until such time as PSCo files and receives FERC approval.		
180				
181				
182	**(9)**	**ACCUMULATED DEFERRED INCOME TAX**		
183				
184		Total Production plant	Line 54	0
185		Total Electric Plant	Line 67	0
186		Accumulated Deferred Income Tax		
187		Account 190	Pg 234 Ln 2c + 3c	
188		Account 281	Pg 273 Ln 4k	
189		Account 282	Pg 275 Ln 2k	
190		Account 283	Pg 277 Ln 9k	
191		Total ADIT		0
192				
193		A. Production share of ADIT	(Line 184 / 185) * Line 191	-
194				
195				
196		B. Return and Taxes	Line 7 + 11	0.000%
197				
198		C. Production Plant (plus step ups)		0
199				
200		(A x B) / C =		-
201				
202	**(10)**	**Materials & Supplies**		
203				
204				
205				
206		A. Total Non-Fuel M&S	Pg 227 Ln 7	
207		B. ROR	Line 133	0.00%
208		C. Return on M&S	Line 206 * 207	0
209		D. Total Prod Plnt	Line 50	0
210				
211		E. Total Plnt in Service	Line 63	0
212		F. % of Prod Plant	Line 209 / 211	0.0000
213		G. Prod M&S Factor	(Line 208 * 212) / Line 209	0.00000

O-PSCo Formula Rate, Table 33, WP_Cost per Unit- Cost Per Unit Version: 0.0.1 Effective: 11/17/2012

Public Service Company of Colorado
Transmission Formula Rate Settlement Template
Cost Per Unit

Table 33
WP_Cost per Unit

Line No	Plant	Total Cost (1)	Name Plate kW (2)	Percent of Name Plate	Non VAR Step Ups (d) * Ln 22	Total Cost W/ Step Ups (b) + (e)
	Col. (a)	Col. (b)	Col. (c)	Col. (d)	Col. (e)	Col. (f)
1				0.00000	$ -	$0
2				0.00000	$ -	$0
3				0.00000	$ -	$0
4				0.00000	$ -	$0
5				0.00000	$ -	$0
6				0.00000	$ -	$0
7				0.00000	$ -	$0
8				0.00000	$ -	$0
9				0.00000	$ -	$0
10				0.00000	$ -	$0
11				0.00000	$ -	$0
12				0.00000	$ -	$0
13				0.00000	$ -	$0
14				0.00000	$ -	$0
15				0.00000	$ -	$0
16				0.00000	$ -	$0
17				0.00000	$ -	$0
18				0.00000	$ -	$0
19	Total	$0	-	0.00000	$ -	$ -
20					100.000%	
21					-	

22 -

(1) FERC Form No. 1 Pages 402-403, Line 17
(2) FERC Form No. 1 Pages 402-403, Line 5

O-PSCo Formula Rate Table 34, WP Load Factor Version: 0.0.1 Effective: 11/17/2012

Public Service Company of Colorado
Transmission Formula Rate Settlement Template
Hourly Demand Data from Form 714 page 9a

Table 34
WP_Load Factor

12 CP (Average of Column 27)	0
Reg Demand (Average of Columns 28-51 & Lines 1-365)	0
Reserved Capacity Factor	0 %

Line No	Date	Time Zone	1	2	3	4	5	6	7	8	9	10	11	12	13	14	15	16	17	18	19	20	21	22	23	24	Max
1																											0
2																											
3																											
4																											
5																											
6																											
7																											
8																											
9																											
10																											
11																											
12																											
13																											
14																											
15																											
16																											
17																											
18																											

19																											
20																											
21																											
22																											
23																											
24																											
25																											
26																											
27																											
28																											
29																											
30																											
31																											
32																											0
33																											
34																											
35																											
36																											
37																											
38																											
39																											
40																											
41																											
42																											
43																											
44																											
45																											
46																											
47																											
48																											
49																											
50																											
51																											
52																											
53																											

54		
55		
56		
57		
58		
59		
60		0
61		
62		
63		
64		
65		
66		
67		
68		
69		
70		
71		
72		
73		
74		
75		
76		
77		
78		
79		
80		
81		
82		
83		
84		
85		
86		
87		
88		

89																											
90																											
91																											0
92																											
93																											
94																											
95																											
96																											
97																											
98																											
99																											
100																											
101																											
102																											
103																											
104																											
105																											
106																											
107																											
108																											
109																											
110																											
111																											
112																											
113																											
114																											
115																											
116																											
117																											
118																											
119																											
120																											
121																											0
122																											
123																											

124																											
125																											
126																											
127																											
128																											
129																											
130																											
131																											
132																											
133																											
134																											
135																											
136																											
137																											
138																											
139																											
140																											
141																											
142																											
143																											
144																											
145																											
146																											
147																											
148																											
149																											
150																											
151																											
152																											0
153																											
154																											
155																											
156																											
157																											
158																											

159																											
160																											
161																											
162																											
163																											
164																											
165																											
166																											
167																											
168																											
169																											
170																											
171																											
172																											
173																											
174																											
175																											
176																											
177																											
178																											
179																											
180																											
181																											
182																											0
183																											
184																											
185																											
186																											
187																											
188																											
189																											
190																											
191																											
192																											
193																											

194																										
195																										
196																										
197																										
198																										
199																										
200																										
201																										
202																										
203																										
204																										
205																										
206																										
207																										
208																										
209																										
210																										
211																										
212																										
213																										0
214																										
215																										
216																										
217																										
218																										
219																										
220																										
221																										
222																										
223																										
224																										
225																										
226																										
227																										
228																										

229																											
230																											
231																											
232																											
233																											
234																											
235																											
236																											
237																											
238																											
239																											
240																											
241																											
242																											
243																											
244																											0
245																											
246																											
247																											
248																											
249																											
250																											
251																											
252																											
253																											
254																											
255																											
256																											
257																											
258																											
259																											
260																											
261																											
262																											
263																											

264																										
265																										
266																										
267																										
268																										
269																										
270																										
271																										
272																										
273																										
274																										0
275																										
276																										
277																										
278																										
279																										
280																										
281																										
282																										
283																										
284																										
285																										
286																										
287																										
288																										
289																										
290																										
291																										
292																										
293																										
294																										
295																										
296																										
297																										
298																										

299																										
300																										
301																										
302																										
303																										
304																										
305																										0
306																										
307																										
308																										
309																										
310																										
311																										
312																										
313																										
314																										
315																										
316																										
317																										
318																										
319																										
320																										
321																										
322																										
323																										
324																										
325																										
326																										
327																										
328																										
329																										
330																										
331																										
332																										
333																										

334		
335		0
336		
337		
338		
339		
340		
341		
342		
343		
344		
345		
346		
347		
348		
349		
350		
351		
352		
353		
354		
355		
356		
357		
358		
359		
360		
361		
362		
363		
364		
365		

O-PSCo Formula Rate, Appendix 1- Implementation Procedures Version:0.2.1 Effective: 1/1/2015

Appendix 1

Public Service Company of Colorado ("PSCo" or "Company") Transmission Formula Rate Implementation Procedures

Section 1 Applicability

The formula rate template ("Formula Rate Template") and these Transmission Formula Rate Implementation Procedures ("Implementation Procedures") (collectively, the "Formula Rate") together comprise PSCo's filed transmission rates and ancillary services rates. PSCo shall follow the Formula Rate to calculate its Annual Transmission Revenue Requirement ("ATRR"), the monthly rate for Network Integration Transmission Service ("NITS Rate"), the monthly rates for Point-to-Point Transmission Service ("PTP Rates"), the Annual Ancillary Services Schedule 1 Revenue Requirement ("S1RR") and the monthly rates for Ancillary Services Schedule 1 - Scheduling, System Control and Dispatch Service ("Schedule 1 Rates"), Ancillary Services Schedule 2 - Reactive Supply and Voltage Control from Generation or Other Sources Service ("Schedule 2 Rates"), Ancillary Service Schedule 3 - Regulation and Frequency Response Service ("Schedule 3 Rates"), "), Ancillary Services Schedule 3A – Regulation and Frequency Response Service for Point-to-Point Transmission Service for exports from the PSCo Balancing Authority Area ("Schedule 3A Rates"), Ancillary Services Schedule 5 - Operating Reserve - Spinning Reserve Service ("Schedule 5 Rates"), Ancillary Services Schedule 6 - Operating Reserve Supplemental Reserve Service ("Schedule 6 Rates"), Ancillary Services Schedule 16 – Flex Reserve Service ("Schedule 16 Rates") for the PSCo rate zone under the Xcel Energy Operating Companies ("Xcel Energy") Open Access Transmission Tariff ("Joint OATT").

The Formula Rate shall be effective for service on and after November 17, 2012 for each full or partial calendar year (the "Rate Year" or "Formula Rate Year"), subject to the implementation, review, challenge and true-up procedures of these Implementation Procedures.

The customers taking NITS service and the customers taking PTP service are hereinafter referred to, collectively, as "Customers" or "Transmission Customers." The forecasted ATRR is referred to as the "Estimated ATRR," the forecasted S1RR is referred to as the "Estimated S1RR", and the forecasted NITS Rate, PTP Rates and Ancillary Services Schedule 1 Rates are collectively referred to as the "Estimated Rates." In the spring of the year following the Rate Year, the Estimated ATRR and the Estimated S1RR will be trued-up, as described herein, based on actual data for the Rate Year, to establish the Actual ATRR and Actual S1RR. As part of such true-up (the "Annual True-up"), PSCo also will calculate the Actual NITS Rate, Actual PTP Rates and Actual Ancillary Services Schedule 1 Rates (collectively referred to as the "Actual Rates"). PSCo will calculate the rates for Ancillary Services Schedules 2, 3, 3A 5, 6 and 16 for each Rate Year based on actual data from PSCo's most recently filed Federal Energy Regulatory Commission FERC Form 1 ("FERC Form 1") and such rates are not subject to the Annual True-up.

The Federal Energy Regulatory Commission ("FERC" or "Commission") annually determines the FERC Annual Charge and PSCo assesses the charge to its Transmission Customers. The FERC Annual Charge is shown on the Formula Rate Template rate sheet for ease of reference but it is a pass through of the FERC-calculated charge and is not part of the Formula Rate calculations or subject to the Annual True-up.

Section 2 Annual Update for Upcoming Rate Year

No later than October 1 of each year (or, if October 1 is a weekend day or a holiday recognized by FERC, the first day following such weekend day or holiday that FERC is open for business ("Business Day")), PSCo shall post the Estimated ATRR, the Estimated S1RR, the Estimated Rates and the Ancillary Services Schedule 2, 3, 5 and 6 Rates for the upcoming Rate Year, to be effective beginning January 1 of the upcoming Rate Year ("Annual Update"). PSCo shall post the Annual Update on the Transmission OATT page of the Xcel Energy website (www.xcelenergy.com <http://www.xcelenergy.com>) and on the PSCo OASIS (wesTTrans.net OASIS or any successor OASIS) (hereinafter, "PSCo OASIS"), in a location that is accessible by the general public. PSCo shall simultaneously notify its Customers electronically that the Annual Update is available for their review.

a. Annual Update: Components

The Annual Update shall include the following:

(i) a data-populated version of the Formula Rate Template, including fully functioning Excel® files, setting forth the Estimated ATTR, the Estimated S1RR, the Estimated Rates and the Ancillary Service Schedule 2, 3, 3A, 5, 6 and 16 Rates for the next Rate Year;

(ii) supporting documentation, including, but not limited to, fully functioning Excel® files (or other such native format files) and workpapers required to support, demonstrate and explain the information upon which the Annual Update is based;

(iii) disclosure of the Material Changes to the extent (a) such changes have taken effect since January 1, 2012 for the first Annual Update in October 2012 and, thereafter, in subsequent Annual Updates, any such changes that have taken place since the immediately prior Annual Update; and (b) any such changes affect the Formula Rate, calculation of the Annual Update or the allocation of costs or revenues to PSCo's Customers. For purposes of these Implementation Procedures, "Material Changes" are changes in (1) FERC's Uniform System of Accounts ("USoA"), (2) FERC Form No. 1 reporting requirements as applicable, and (3) the accounting policies, practices, or procedures of PSCo. Material Changes also include (4) changes directed by FERC orders applicable to the Formula Rate or accounting orders applicable to PSCo that affect accounts providing inputs directly or indirectly to the Formula Rate Template, (5) disclosure of any errors in the FERC Form No. 1, the Formula Rate Template, or accounting data that impacts the Formula Rate in the upcoming Rate Year or previous Rate Years;

(iv) a list of each transmission, general, intangible, and electric common annual capital addition;

(v) the Common Plant Study that is the basis of the common plant allocation factors used in the Annual Update; and

(vi) Detail of the amount included in rate base and the amortization of the wholesale share of the transmission serving transmission acquisition adjustment ($5,308,257) associated with PSCo's December 10, 2010 purchase of the Rocky Mountain Energy Center, with the amortization of such acquisition adjustment to be over a period of 55 years.

b. Annual Update: Estimated Rates

The Annual Update shall compute the Estimated Rates based upon PSCo's most recent budget for the upcoming Rate Year and supplemental data from PSCo's books and records concerning the upcoming Rate Year ("Supplemental Data") that reasonably project transmission peak demands and costs properly recorded (or to be recorded) on its books consistent with the USofA, FERC's orders establishing generally applicable transmission ratemaking policies, and FERC accounting policies and directives. The Estimated Rates shall be developed in the following manner:

(i) an average of 13-monthly balances shall be applied to: (a) gross plant balances and gross plant adjustments for all plant functions, excluding generator step-ups; (b) accumulated depreciation and amortization reserve balances and depreciation reserve adjustments for all plant functions, excluding generator step-ups; (c) capital structure balances inclusive of long-term debt, preferred stock, and common equity; (d) the following Other Rate Base Items: Future Use Land and Land Rights, Materials and Supplies, Prepayments Regulatory Liabilities, and Construction Work In Progress ("CWIP") and related pre-funded Allowance for Funds Used During Construction ("AFUDC") (if and when the inclusion of CWIP in rate base is approved by FERC); and (e) the transmission-related acquisition adjustments permitted by FERC order to be included in the Formula Rate for ratemaking purposes; and

(ii) an average of the beginning of year and end of year balances shall be applied to Accumulated Deferred Income Taxes.

c. Annual Update: Ancillary Services Schedule 2, 3, 3A, 5, 6 and 16 Rates

PSCo will calculate the rates for Ancillary Service Schedules 2, 3, 3A 5, 6 and 16 using actual data from PSCo's most recently filed FERC Form 1. For example, the Schedule 2, 3, 3A, 5, and 16 rates to become effective as of November 17, 2012 for the remaining months in Rate Year 2012 will be based on PSCo's 2010 FERC Form 1. The Schedule 2, 3, 3A, 5, 6 16rates to become effective January 1, 2013 will be based on PSCo's 2011 FERC Form 1. Ancillary Services Schedule 2, 3, 3A 5, and 16 rates are not subject to the Annual True-up.

d. Annual Update: Customer Meeting

Each year, no later than October 20 (or the next Business Day if October 20 is not a Business Day), PSCo shall convene a meeting ("Annual Update Customer Meeting") among PSCo, its Customers and their respective designated representatives (collectively, "Interested Parties") to explain the Annual Update, including the derivation of the Estimated Rates and the Ancillary Services Schedule 2, 3, 3A, 5, 6 and 16. Rates for the next Rate Year. Notwithstanding the foregoing, PSCo and the Customers may mutually agree to a later date for the Annual Update Customer Meeting. The Annual Update Customer Meeting shall (i) allow enough time for PSCo to present details about its Annual Update and (ii) provide the Interested Parties the opportunity to seek information and clarification from PSCo about the Annual Update. PSCo will accommodate Interested Parties that wish to participate in the Annual Update Customer Meeting via teleconference or webinar. PSCo shall provide at least fourteen (14) calendar days' prior written notice of the Annual Update Customer Meeting. Such notice shall be provided no later than the time the Annual Update is provided. Such written notice may be provided by electronic mail to the Interested Parties.

e. Modification of Annual Update

PSCo shall modify the Annual Update to reflect any changes that it and the Customers comprising the majority of PSCo's network load have mutually agreed upon as of December 31 (or the next Business Day if December 31 is not a Business Day). If there are mutually agreed upon changes, PSCo shall post a Revised Annual Update incorporating the agreed changes as soon as possible after such agreement, but no later than January 15 (or the next Business Day if January 15 is not a Business Day). PSCo shall simultaneously notify the Customers of the posting.

f. Challenge and Review of Annual Update

The Annual Update is subject to review and challenge in accordance with the procedures set forth in Section 6 and Section 7 below.

g. Annual Update: Informational Filing

By January 15 (or the next Business Day if January 15 is not a Business Day), PSCo shall file with FERC the Annual Update, as revised to reflect any changes that PSCo and the Customers comprising the majority of PSCo's network load have mutually agreed upon pursuant to Section 2e ("Annual Informational Filing"). The Annual Informational Filing will include both portable document format ("PDF") and fully functioning Excel® files (or other such native format files) of the Annual Update. The Annual Informational Filing shall not require action by FERC.

h. Subsequently Discovered Errors

Any error, defined as a calculation error in the formula rate or an input error in the formula rate or FERC Form No. 1, to the Annual Update identified by PSCo or Customer(s) during the Formula Rate Year, which PSCo and one or more Customers agree affects the Customers' Estimated Rates, shall be rectified by PSCo in the Formula Rate Template. PSCo shall implement the resulting revised Estimated Rates and/or revised Ancillary Services Schedule 1, 2, 3, 5 or 6 Rates in the next billing month after such revision is calculated. To the extent such error affects months prior to the month that PSCo and Customer(s) agree that an error should be rectified, the correction for such months will be reflected in the subsequent Annual True-up (as defined in Section 4, below) and there shall be no intra-Rate Year refund or surcharge associated with such error. The same procedures shall apply in the event of an error affecting the Estimated Rates of an individual customer. Once the Formula Rate Year is complete, there shall no longer be a requirement to correct the Estimated Rates for such year. Any such correction to address the error shall be made to the Actual Rates for such Formula Rate Year at the time of the Annual True-up or thereafter should the error be discovered after the Annual True-up. See Section 4.f. below.

Section 3 Post-Employment Benefits Other Than Pensions ("PBOP") Filing

The PBOP charges included in each Annual Update shall be the actual FERC-approved PBOP cost booked to FERC Account 926 for the prior Rate Year.

On or before April 1 of each year, an Actuarial Study supporting PSCo's proposed actual PBOP costs for the prior Rate Year will be filed with the Commission for approval under FPA Section 205 ("PBOP Filing"). The PBOP Filing will be posted and provided to Customers. The actual PBOP costs for the prior Rate Year that are approved by FERC shall be used for the annual true-up ("Annual True-up") of such prior Rate Year. PSCo expects, absent extraordinary circumstances,

that the Commission will have acted on the April 1st PBOP filing in time for inclusion of the FERC-approved actual PBOP costs in the Annual True-up of such prior Rate Year. In the event the Commission has not acted on the April 1st PBOP filing by the time PSCo posts the Annual True-Up, PSCo will include its actual costs pending approval from FERC in the initial posting of the Annual True-Up, but will ultimately reflect, before the true-up is finalized, the Commission-approved PBOP costs for such prior Rate Year, if they are different.

With respect to the Estimated Rates for the upcoming Formula Rate Year, PSCo will use the budgeted PBOP costs for each such Rate Year in the Annual Update, subject to true-up. For example, the 2012 Estimated Rates will use the 2012 estimated PBOP costs but, by the time that the 2012 Estimated Rates are trued-up in 2013, PSCo will have and will use the FERC-approved actual 2012 PBOP costs in the Annual True-up for Rate Year 2012. Similarly, the 2013 Estimated Rates will use the 2013 estimated PBOP costs, but when the 2013 Estimated Rates are trued-up in 2014, PSCo will have and will use the actual FERC-approved 2013 PBOP costs for the Annual True-up of Rate Year 2013. Annually, PSCo will fund to an external trust the PBOP costs collected pursuant to the Formula Rate.

Section 4 Annual True-up

Beginning in 2013, by no later than June 1 of each Rate Year (or the next Business Day if June 1 is not a Business Day), PSCo shall true-up the Annual Update for the prior Rate Year (the "True-up Year"). The annual true-up ("Annual True-Up") shall establish the Actual ATRR, the Actual S1RR, and the Actual Rates for True-up Year based on PSCo's actual costs as reflected in its FERC Form No. 1 and its books and records (maintained in accordance with the FERC's Uniform System of Accounts ("USofA")) for such True-up Year. PSCo shall post the Actual ATRR, the Actual S1RR and the Actual Rates for the True-up Rate Year on the Transmission OATT page of the Xcel Energy website and on the PSCo OASIS, in a location that is accessible by the general public. PSCo shall simultaneously notify its Customers electronically that the Annual True-up is available for their review.

a. Annual True-up: Components

The Annual True-up shall include the following:

(i) a data-populated version of the Formula Rate Template, including fully functioning Excel® files, setting forth the Actual ATTR, the Actual S1RR and the Actual Rates;

(ii) supporting documentation, including, but not limited to, fully functioning Excel® files (or other such native format files) and workpapers required to support and explain information upon which the Annual True-up is based;

(iii) disclosure of the Material Changes to the extent (a) such changes have taken effect since January 1, 2012 for the first Annual True-Up in June 2013 and, thereafter, in subsequent Annual True-Ups, any such changes that have taken place in the True-Up Year (January 1 – December 31 of the calendar year immediately prior to the June True-Up); and (b) any such changes affect the Formula Rate, calculation of the True-up or the allocation of costs or revenues to PSCo's Customers;

(iv) a list of each transmission, general, intangible, and electric common annual capital addition;

(v) Detail of the amount included in rate base and the amortization of the wholesale share of the transmission serving transmission acquisition adjustment ($5,308,257) associated with

PSCo's December 10, 2010 purchase of the Rocky Mountain Energy Center, with the amortization of such acquisition adjustment to be over a period of 55 years; and

(vi) a side-by-side comparison of the actual Formula Rate Template components with the estimated Formula Rate Template components for the True-up Year ("Variance Analysis"). Where an estimated rate base component, when trued-up, is $5,000,000 above or below the actual rate base component, and where an estimated expense or revenue component, when trued-up, is more than five percent (5%) and $500,000 above or below the actual expense or revenue component, PSCo shall provide a written explanation of the reason for such variance. The foregoing limits do not, however, preclude Customers from seeking information for any variance falling below such thresholds.

b. Annual True-up: Actual Rate Calculations

The Annual True-up shall calculate Actual Rates in the following manner:

(i) costs shall be actual costs as reflected in PSCo's FERC Form 1, inclusive of any revisions thereto, for the True-up Year and in any Supplemental Data necessary to complete the Formula Rate Template inputs for the Annual True-up.

(ii) the Actual ATRR and Actual S1RR will be determined using the same methodologies for calculating the Estimated ATRR and Estimated S1RR, except to the extent different methodologies are required as a result of Material Changes identified pursuant to Section 4a(iii); and

(iii) Actual Rates will be determined based upon the Actual ATRR and Actual S1RR, as appropriate, and the actual system transmission peak load.

c. Annual True-up: Customer Meeting

Each year, beginning in 2013, by June 30 (or the next Business Day if June 30 is not a Business Day), PSCo shall convene a meeting ("Annual True-up Customer Meeting") among PSCo and Interested Parties to explain the Annual True-up, including the derivation of the Actual ATRR, Actual S1RR and Actual Rates for the True-up Year. Notwithstanding the foregoing, PSCo and the Customers may mutually agree to a later date for the Annual True-up Customer Meeting. The Annual True-up Customer Meeting shall (i) allow enough time for PSCo to present details about its Annual True-up and (ii) provide the Interested Parties the opportunity to seek information and clarification from PSCo about the Annual True-up. PSCo will accommodate Interested Parties that wish to participate in the Annual True-up Customer Meeting via teleconference or webinar. PSCo shall provide at least fourteen (14) calendar days' prior written notice of the Annual True-up Customer Meeting. Such notice shall be provided no later than the date on which the Annual True-up is provided. Such written notice may be provided by electronic mail to the Interested Parties.

d. Challenge and Review of Annual True-up

The Annual True-up is subject to challenge and review in accordance with the procedures set forth in Section 6 and Section 7 below.

e. Annual True-up: Individual Customer True-up, Refunds and/or Surcharges

The Annual True-up shall include, for each Customer affected by the Annual True-up, a comparison of what the Customer paid for service based on Estimated Rates and what the Customer should have paid based upon Actual Rates ("Customer True-up Adjustment"). In the event the Customer True-up Adjustment reflects an overpayment, PSCo shall refund such overpayment to the affected Customer, with interest determined in accordance with 18 C.F.R § 35.19a, as promptly as possible after PSCo and the Customers comprising the majority of PSCo's network load mutually agree on the Actual Rates and PSCo and the affected Customer agree on the individual Customer True-up Adjustment. In the event that the Customer True-up Adjustment reflects an underpayment, the affected Customer shall pay such underpayment to PSCo, with interest determined in accordance with 18 C.F.R § 35.19a, as promptly as possible after PSCo and the Customers comprising the majority of PSCo's network load mutually agree on the Actual Rates and PSCo and the affected Customer agree on the individual Customer True-up Adjustment; provided, however, if the amount due to PSCo exceeds 10 percent (10%) of the amount previously paid by the Customer in the True-up Year, a Customer may elect to extend such payment to PSCo over not more than twelve (12) months, with interest on the unpaid balance calculated using the interest rate specified in 18 C.F.R. § 35.19a. PSCo shall provide notice to the Customers that no issues have been raised or all issues have been resolved and that PSCo intends to refund to or surcharge Customers thirty (30) days after the issuance of such notice, absent a statement to the contrary from an affected Customer in the thirty (30) days.

f. Subsequently Discovered Errors

Any error, defined as a calculation error in the formula rate or an input error in the formula rate or FERC Form No. 1, to the Annual True-up subsequently identified by PSCo or Customer(s), which PSCo and one or more Customers agree affects the Customers' Actual Rates, shall be rectified by PSCo in the Formula Rate Template. PSCo shall reflect the resulting corrected Actual Estimated Rates and/or corrected Ancillary Services Schedule 1, 2, 3, 3A, 5, 6 and 16 Rates in the next billing month after such revision is calculated or such subsequent billing month as is mutually agreeable to PSCo and the Customers. The same procedures shall apply in the event of an error affecting the Actual Rates of an individual customer. There is no time limit with respect to PSCo's obligation to, and right to, correct an error in the implementation of the formula rate.

Section 5 Annual Formula Rate Calendar

For ease of reference, once the Formula Rate is in effect, the calendaring shall be as follows:

Month	Year	Action
Oct.	2012	Annual Update – No later than the first Business Day in October 2012, PSCo populates the Formula Rate Template with Rate Year 2013 budgeted/estimated data and calculates the Estimated ATRR, Estimated S1RR, and Estimated Rates to be effective January 1, 2013. PSCo develops Ancillary Service Schedule 2, 3, 3A, 5, 6 and 16Rates, also to be effective January 1, 2013, by populating the Ancillary Service Rate Templates with actual data from PSCo's 2011 FERC Form 1 and books and records.
Dec.	2012	PSCo makes any mutually agreed changes to the Annual Update by December 31 (or the next Business Day if December 31 is not a Business Day).

Jan.	2013	PSCo submits the Annual Update, as modified to incorporate any agreed upon changes, as the Annual Informational Filing no later than January 15 (or the next Business Day if January 15 is not a Business Day).
April	2013	Annual PBOP Filing - On or before April 1, PSCo files for Commission approval actuarial studies for the prior calendar year (Rate Year 2012) showing the PBOP amounts to be booked for such Rate Year which, when approved by the FERC, will be used in the Annual True-Up for such prior Rate Year (Rate Year 2012).
June	2013	Annual True-up - No later than the first Business Day in June 2013, PSCo populates the Rate Year 2012 Formula Rate Template with Rate Year 2012 actual data, calculates the Actual ATRR, Actual S1RR, Actual Rates, and Customer True-up Adjustments.
Oct.	2013	Annual Update – No later than the first Business Day in October 2013, PSCo populates the Formula Rate Template with Rate Year 2014 budgeted/estimated data and calculates the Estimated ATRR, Estimated S1RR, and Estimated Rates to be effective January 1, 2014. PSCo develops the Ancillary Service Schedule 2, 3, 3A, 5, 6 and 16Rates, also to be effective January 1, 2014, by populating the respective Ancillary Service Rate Templates with actual 2012 data from PSCo's 2012 FERC Form 1 and books and records.
Dec.	2013	PSCo makes any mutually agreeable changes to the Annual Update by December 31 (or the next Business Day if December 31 is not a Business Day).
Jan.	2014	PSCo submits the Annual Update, as modified to incorporate any agreed upon changes, as the Annual Informational Filing no later than January 15 (or the next Business Day if January 15 is not a Business Day).
April	2014	Annual PBOP Filing - On or before April 1, PSCo files, for Commission approval, actuarial studies for the prior calendar year (Rate Year 2013) showing the PBOP amounts to be booked for such Rate Year, which when approved by the FERC will be used in the Annual True-Up for such prior Rate Year (Rate Year 2013).
June	2014	Annual True-up - No later than the first Business Day in June 2013, PSCo populates the Rate Year 2013 Formula Rate Template with Rate Year 2013 actual data, calculates the Actual ATRR, Actual S1RR, Actual Rates, and Customer True-up Adjustments.
Oct.	2014	Annual Update – No later than the first Business Day in October 2014, PSCo populates the Formula Rate Template with Rate Year 2015 budgeted/estimated data and calculates the Estimated ATRR, Estimated S1RR, and Estimated Rates to be effective January 1, 2015. PSCo develops the Ancillary Service Schedule 2, 3, 3A, 5, 6 and 16Rates, also to be effective January 1, 2015, by populating the respective Ancillary Service Rate Templates with actual 2013 data from PSCo's 2013 FERC Form 1 and books and records.

This sequencing pattern shall be followed thereafter.

Section 6 Annual Review Procedures

Each Annual Update and Annual True-up shall be subject to the following review procedures ("Annual Review Procedures"):

a. Customer Review

In the course of the two-stage Annual Review each year, Interested Parties shall have one hundred and thirty (130) calendar days after each of the Annual Update Customer Meeting and the Annual True-up Customer Meeting to serve information requests ("Data Requests") on PSCo with respect to the Annual Update and the Annual True-up, respectively. The Data Requests may be directed at any aspect of the implementation of or the inputs used in the Annual Update or Annual True-up, including the derivation of Estimated Rates, Actual Rates, Ancillary Service Schedule 1, 2, 3, 3A, 5, 6 and 16Rates, or any associated issue raised at the Annual Update Customer Meeting or the Annual True-up Customer Meeting. The deadline for discovery may be extended by mutual consent. Nothing in this Section 6.a shall prohibit Interested Parties from submitting information requests to PSCo concerning the Annual Update and the Annual True-up, respectively, after the posting of the Annual Update and the Annual True-up but prior to the Annual Update Customer Meeting or the Annual True-up Customer Meeting.

b. PSCo Response to Data Requests

PSCo shall make a good faith effort to respond to any Data Requests within ten (10) Business Days after receipt. If a response requires additional time to prepare, PSCo shall promptly inform the requesting Interested Party and shall provide the response as soon as possible, but in no event later than thirty (30) calendar days after PSCo's receipt of the Data Request, unless the parties mutually agree otherwise. All Interested Parties shall be provided PSCo's responses to all Data Requests via electronic mail or other mutually acceptable means.

c. Discovery Dispute Resolution

To the extent PSCo and any Customer(s) are unable to resolve disputes related to any Data Request or the adequacy of any response, PSCo or any Customer(s) may petition FERC to appoint an Administrative Law Judge as a discovery master. The discovery master shall have the power to issue binding orders to resolve discovery disputes and compel the production of discovery relating to application of the Formula Rate or population of the Formula Rate Template for the Rate Year in question, as appropriate, in accordance with these Implementation Procedures.

d. Use of Information from Annual Review Procedures

All information and correspondence produced pursuant to these Annual Review Procedures may be used in any Formal Challenge (as defined in Section 7.c., below) concerning the Formula Rate, any Federal Power Act ("FPA") Section 205, 206 or 306 filing concerning the Formula Rate, or in any other proceeding concerning the Formula Rate initiated at FERC pursuant to the FPA.

e. Confidential Information

PSCo may designate any response to a Data Request as confidential if the information conveyed in the response is not publicly available. Interested Parties shall treat such a designated response as non-public information provided in confidence. Interested Parties may use confidential responses to Data Requests in connection with any informal dispute resolution process commenced pursuant to Section 7. Interested Parties may also use confidential responses to Data Requests in any Formal Challenge (as defined in Section 7.c., below) concerning the Formula Rate, in any FPA Section 205, 206 or 306 filing concerning the Formula Rate, or in any other proceeding concerning the Formula Rate initiated at FERC pursuant to the FPA; provided, however, when so used, such Data Response(s) shall initially be filed under seal (unless the claim of confidentiality is waived by PSCo), subject to a later determination by the presiding administrative authority that the material is, in whole or in part, not entitled to confidential treatment.

Section 7 Annual Update and Annual True-up Informal Resolution Procedures and Challenges

PSCo and the Customer(s) shall undertake good faith efforts to resolve any disputes through the informal dispute resolution procedures described below before a Formal Challenge is filed with FERC.

a. Specific Challenges

Unless the parties mutually agree otherwise, any Customer shall have the longer of one hundred and seventy-five (175) calendar days after an Annual Update Customer Meeting and after an Annual True-up Customer Meeting or fifteen (15) calendar days after PSCo has fully responded to all proper and timely Data Requests related to an Annual Update or an Annual True-up, to review the Annual Update or the Annual True-up and notify PSCo in writing of specific challenges to such Annual Update or Annual True-up. PSCo or Customer(s) may request, with at least ten (10) calendar days' written notice, that additional meetings be held between PSCo and Interested Parties to discuss specific areas of concern. Failure to notify PSCo of a specific challenge to an Annual Update or an Annual True-up within such time limits shall not bar pursuit of informal dispute resolution of such issue(s) by a specific challenge made in a subsequent Annual Update or Annual True-up.

b. Informal Dispute Resolution

Non-executive representatives of PSCo and the Customer(s) shall attempt to resolve a specific challenge within thirty (30) calendar days of written notification (or a longer period if the parties mutually agree to extend such period) of such specific challenge. If non-executive representatives are unable to resolve a specific challenge, senior management representatives of PSCo and the Customer(s), who have the authority to negotiate and settle such disputes, shall meet and attempt to resolve the specific challenge. All Interested Parties will be served notice of each specific challenge and copies of correspondence related thereto.

c. Formal Dispute Resolution

If the senior management representatives of PSCo and the Customer(s) are unable to resolve a specific challenge within thirty (30) calendar days after the dispute is referred to them (or a longer period if the parties mutually agree to extend such period), then the Customer(s) may pursue such formal dispute resolution as may be available to them under the Federal Power Act and FERC's

regulations ("Formal Challenge"). PSCo may raise both substantive and procedural defenses against such a Formal Challenge except as set out at the end of the following sentence. A decision not to file a Formal Challenge for a given Annual True-up or Annual Update, does not preclude the Customers raising the same or other issues as a specific challenge to a subsequent Annual Update or Annual True-up and, if they take that action, PSCo shall not assert that the prior failure to file a Formal Challenge is evidence of an accepted ratemaking practice.

d. Burden of Proof

In any proceeding ordered by FERC in response to a Formal Challenge raised under these Implementation Procedures, PSCo shall have the ultimate burden of proof as to the justness and reasonableness of the charges resulting from its application of the Formula Rate, and as to whether it properly applied the Formula Rate and these Implementation Procedures.

Section 8 Changes to Stated Inputs in the Formula Rate

a. Stated Inputs

The following Formula Rate inputs, as agreed to in the settlement of Docket No. ER12-1589-000, shall be stated values to be used in the Formula Rate (both for the Annual Update and the Annual True-up) until changed by a filing pursuant to Section 205 of the FPA or by order of the Commission pursuant to Section 206 of the FPA:

(i) the rate of return on common equity ("ROE");

(ii) depreciation rates and amortization periods, including amortization periods for FERC-approved regulatory assets and liabilities and acquisition adjustments (as set forth in Table 25 to the Formula Rate);

(iii) the actual costs of Post-Employment Benefits Other than Pensions pursuant to Statement of Financial Accounting Standards No. 106 Employers' Accounting for PBOP charges, as approved by Order of the FERC;

(iv) Percent of Production Plant for Dual Use;

(v) Real Power Losses;

(vi) Ancillary Service Schedules 3, 3A 5, 6,16 percentage of reserved capacity used for billing purposes; and

(vii) Ancillary Service Schedules 3 and 3A, and 16Required Capacity, and 12 Coincident Peak Load used to calculate the Reserve Obligation.

b. ROE

The stated return on common equity ("ROE"), effective November 17, 2012, shall be established pursuant to a final Commission order on ROE in Docket No. ER12-1589-000. Thereafter, the ROE shall not be changed unless and until PSCo or the Customer(s) has (have) filed for a different ROE pursuant to Section 205 and 206 of the FPA, respectively.

c. PBOP Charges

PBOP charges shall be determined for each Annual True-Up pursuant to the procedure described in Section 3.

d. Cash Working Capital

The stated amount for Cash Working Capital ("CWC") shall be set at zero dollars and shall not be changed until PSCo or the Customer(s) has(have) filed for a different level of recovery pursuant to Section 205 and 206 of the FPA, respectively.

e. Extraordinary Property Losses

The balance for Extraordinary Property Losses shall be set at zero dollars and shall not be changed until PSCo has filed under Section 205 of the FPA for recovery of such loss(es) and FERC has authorized the recovery of such losses. The FERC-approved amortized annual amount for Extraordinary Property Losses shall be includable in the Formula Rate for Annual Update and Annual True-up purposes for the number of partial or full Rate Years that coincide with the approved amortization period.

f. Construction Work in Progress

The balance for Construction Work in Progress ("CWIP") shall be set at zero dollars and shall not be changed until PSCo has filed for and received FERC approval to include CWIP related to specific projects in rate base for the Formula Rate pursuant to a filing under Section 205 of the FPA.

g. Abandoned Plant

The balance for Abandoned Plant shall be set at zero dollars and shall not be changed until PSCo has filed under Section 205 of the FPA for recovery of costs associated with Abandoned Plant and FERC has approved the recovery of such costs together with an allowable annual amount and an amortization period. The FERC-approved amortized annual amount for costs associated with Abandoned Plant shall be includable in the Formula Rate for Annual Update and Annual True-up purposes for the number of partial or full Rate Years that coincide with the approved amortization period.

h. Formula Rate Inputs Not Requiring FERC Filing

As distinguished from the Formula Rate restrictions with respect to CWIP, CWC, Extraordinary Property Losses, and Abandoned Plant where PSCo must make a FPA Section 205 filing to change an existing Formula Rate input of zero dollars, the Formula Rate may, in any given year, reflect a number of FERC Accounts where the Formula Rate inputs also are zero dollars. For those years in which there the Formula Rate inputs are other than zero dollars, PSCo may change such inputs without the need to make a FPA Section 205 filing with FERC. Such Formula Rate inputs include but may not be limited to the following:

(i) scheduling, system control and dispatch services operating expense (recorded in FERC Account 561.4);

(ii) underground lines operating expense (recorded in FERC Account 564);

(iii) maintenance of structures (recorded in FERC Account 569);

(iv) maintenance of computer hardware, computer software, communication equipment and regional transmission plant (recorded in FERC Accounts 569.1, 569.2, 569.3 and 569.4);

(v) maintenance of underground lines (recorded in FERC Account 572);

(vi) maintenance of miscellaneous transmission plant (recorded in FERC Account 573);

(vii) franchise requirements (recorded in FERC Account 927);

(viii) preferred stock (recorded in FERC Account 204);

(ix) preferred stock dividends (recorded in FERC Account 437);

(x) interest on debt to associated companies, long-term debt portion only (recorded in FERC Account 430);

(xi) amortization of premium on debt (recorded in FERC Account 429); and,

(xii) amortization of gain on reacquired debt (recorded in FERC Account 429.1).

i. Asset Retirement Obligations

There are no Asset Retirement Obligations ("AROs") recovered in the Formula Rate. Any proposal by PSCo to recover AROs will require a FPA Section 205 filing.

j. Mountain Pine Beetle

PSCo filed in FERC Docket No. ER12-1589-000 to include and thereby recover in the Formula Rate, effective January 1, 2013, a proposed two-year amortization of the costs PSCo incurred combating the Mountain Pine Beetle infestation of Colorado forests for the period prior to January 1, 2013. These costs have been deferred as authorized by the Commission in Docket No. AC11-186-000. The parties to the docket agreed by settlement to a three-year amortization. When approved by the Commission in Docket No. ER12-1589-000, these costs shall be includable in the Formula Rate for Annual Update and Annual True-up purposes for the number of partial or full Rate Years that coincides with the amortization period accepted by the Commission.

k. San Luis-Calumet-Comanche Transmission Project

PSCo filed in Docket No. ER12-1589-000 to include and thereby recover in the Formula Rate a proposed two-year amortization of 50 percent (50%) of the pre-construction costs that PSCo incurred in connection with the San Luis-Calumet-Comanche transmission project. PSCo will no longer build this project. The parties to the docket agreed by settlement to a three-year amortization. When approved by the Commission in Docket No. ER12-1589-000, these costs shall be includable in the Formula Rate for Annual Update and Annual True-up purposes for the number of partial or full Rate Years that coincides with the amortization period accepted by the Commission. The Wholesale share of 50 percent of the pre-construction costs will be recovered in the formula rates over a 3 year period beginning with the effective date of the Formula Rate. The Wholesale share of the other 50 percent will be booked to Account No. 426.5 and absorbed by the Company.

I. Rate Case Expenses

PSCo filed in Docket No. ER12-1589-00 to include and thereby recover in the Formula Rate a proposed two-year amortization of rate case expenses that PSCo incurred in connection with approval of the Formula Rate. The parties to the docket agreed by settlement to a three-year amortization. When approved by the Commission in Docket No. ER12-1589-000, these costs shall be includable in the Formula Rate for Annual Update and Annual True-up purposes for the number of partial or full Rate Years that coincides with the amortization period accepted by the Commission.

As distinguished from the expenses associated explicitly with Docket No. ER12-1589-000, ongoing expenses associated with the Formula Rate (e.g., Annual Update costs; Annual True-up costs) shall be expensed in the Rate Year in which such costs are incurred.

Section 9 Changes to Annual True-Up

Changes to PSCo's FERC Form 1 data or changes that affect Supplemental Data, which changes are made subsequent to completion of the Annual True-up, shall trigger a True-up Adjustment to be reflected in the subsequent Annual True-up. Any change to such input data will be provided by PSCo to the Customer(s) as soon as possible, together with an explanation of the change(s) and a repopulated Formula Rate Template for the applicable Rate Year(s) that demonstrates the effect of the change. Customers shall have all of the rights afforded by these Implementation Protocols to investigate and protest such changes, with all dates running from the date PSCo provides the Customer(s) with changed input data.

Section 10 Changes to or Termination of Formula Rates

PSCo and Customers reserve their respective rights under Sections 205 and 206 of the FPA, respectively, to seek modification of or termination of the Formula Rate. PSCo shall provide to the Customers a copy of any proposed Section 205 filing at least thirty (30) calendar days prior to making the filing and shall offer to meet with Interested Parties to discuss the proposed filing prior to its submission to FERC. The Customers shall provide similar advance notice and opportunity to meet prior to making a Section 206 filing. Unless PSCo and the Customers(s) mutually agree otherwise, PSCo or the Customer(s) shall request in any such FPA Section 205 or 206 that the effectiveness of any proposed modification or termination of the Formula Rate be coincident with the beginning of the next Rate Year.

The advance notification and meeting requirements set forth above shall not apply in the event that FERC mandates any changes in the format of the FERC Form 1 or the USoA, or otherwise issues a ruling that necessitates a modification to the Formula Rate. In such event, PSCo may propose a modification to the Formula Rate without notice by making a FPA Section 205 filing at any time. Such filing, however, may not be used by either PSCo or Customers to raise issues unrelated to such FERC-required changes. Moreover, if such a change in the Formula Rate is required for the reasons described in this paragraph, the FPA Section 205 filing may include a request for waiver of applicable notice requirements as may be necessary to permit the change to become effective for the Annual Update or Annual True-up for the applicable Rate Year.

Section 11 True-up for Departed Customer

A Customer that ceases taking transmission service from PSCo will remain subject to the true-up provisions of the Formula Rate applicable to the Estimated Rates collected during the period of time that the Customer was taking service pursuant to the Formula Rate. As the result of such

true-up, the departed Customer may be liable for an additional payment due to PSCo or entitled to a refund from PSCo. The True-up calculation will be made as part of the Annual True-up and, therefore, may not be available coincident with the date of the Customer's departure.

Section 12 Miscellaneous

a. Inter-Company Cost Allocation

It is understood that Xcel Energy Services Inc. ("XES"), PSCo's service company affiliate, may undertake activities on behalf of PSCo under these Implementation Procedures. XES will allocate certain costs among PSCo and PSCo's affiliates pursuant to the allocation methodology in place at the time the Formula Rate becomes effective, as set forth in PSCo's 2011 FERC Form No. 60. PSCo will advise the Customers of any proposed change to such allocation methodology pursuant to Section 4(a)(iii). Any proposed modification to the allocation methodology that has the effect of increasing charges produced by the Formula Rate shall be subject to Section 7 of these Implementation Procedures.

b. Customer Right to Audit

Any Customer shall have the right not more than once in any twelve (12) month period to audit, at Customer's expense, PSCo's books and records. A Customer requesting to audit PSCo's books and records shall give a minimum of (14) calendar days' written notice to PSCo of its desire to conduct an audit. PSCo may schedule the timing of Customer Audit such that it does not conflict with other scheduled audits. PSCo shall notify all Customers of a Customer-initiated audit request and shall cooperate with Customers seeking to conduct a joint audit. In the event the audit reveals any errors in the Annual True-up, PSCo and the Customer(s) shall resolve such errors in accordance with Section 7 of these Implementation Procedures.

c. No Waiver of Statutory Rights

Nothing contained in these Transmission Formula Rate Implementation Procedures shall limit or prohibit the right of any Customer to file a request for relief under Sections 206 or 306 of the FPA and FERC's regulations to challenge PSCo's application of the Formula Rate or the prudence of any expense flowed through the formula rate or to seek to change or terminate the Formula Rate.

O-SPS Rate Template, ATRR, Rates, Mtr Chg, Radial Ln Chg, Table 1 Version: 0.1.0 Effective: 8/1/2010

ATTACHMENT O -SPS
Southwestern Public Service Company Formulaic Rates

Rate Formula Template

Table 1

Utilizing Projected Data

For rates effective 01/01/20yy

SOUTHWESTERN PUBLIC SERVICE COMPANY

(1)		(2)	(3)	(4)	(5)
Line No.					Transmission Amount
1	PROJECTED REVENUE REQUIREMENT	(ln 45)			$ -
2	PRIOR YEAR TRUE UP ADJUSTMENT	Input			
3	INTEREST ON PRIOR YEAR TRUE UP ADJUSTMENT - Input				
4	PRIOR PERIOD CORRECTION TRUE UP ADJUSTMENT (Worksheet A.1 Ln 52)				$ -
5	INTEREST ON PRIOR PERIOD CORRECTION TRUE UP ADJUSTMENT (Worksheet A.1 Ln 53)				$ -
6	PROJECTED REVENUE REQUIREMENT WITH TRUE UP & PRIOR PERIOD CORRECTION	(ln 1 + sum lines 2 through 5)			$ -
7	DIVISOR				
8	Transmission Network Load	(Worksheet C)			-
9	RATES				
10	Annual Cost ($/kW/Yr)	(ln 6 / ln 8)	-		
11	Network & P-to-P Rate ($/kW/Mo)	(ln 10 / 12)	-		
			Peak		Off-Peak
12	Weekly P-To-P Rate ($/kW/Wk)	(ln 10 / 52; ln 10 / 52)	-		-
13	Daily P-To-P Rate ($/kW/Day)	(ln 12 / 6; ln 12 / 7)	-	Capped at weekly rate	-
14	Hourly P-To-P Rate ($/MWh)	(ln 13 / 16; ln 13 / 24 both x 1,000)	-	Capped at weekly & daily rate	-
15	METER CHARGE				Charge
16	Revenue Requirement	(Worksheet N)			$0
17	Number of Delivery Points	(Worksheet N)			0
18	Annual Meter Charge ($ per delivery point)	(ln 16 / ln 17)			$0
19	Monthly Meter Charge ($ per delivery point)	(ln 18 / 12)			$0

20	RADIAL LINE CHARGE (Worksheet A-2)	(Annual Charge)	Monthly Charge
21	(Worksheet A-2, Ln xx, Col m)	$0	$0
22	(Worksheet A-2, Ln xx, Col m)	$0	$0
23	(Worksheet A-2, Ln xx, Col m)	$0	$0
24	(Worksheet A-2, Ln xx, Col m)	$0	$0
25	(Worksheet A-2, Ln xx, Col m)	$0	$0
26	(Worksheet A-2, Ln xx, Col m)	$0	$0
27	(Worksheet A-2, Ln xx, Col m)	$0	$0

O-SPS Rate Template, Revenue Rqmt, Projected, Table 2 Version: 0.3.0 Effective: 1/1/2016

Rate Formula Template

Table 2

PROJECTED

Utilizing Projected Data

For the Billing Period 01/01/yy to 12/31/yy

SOUTHWESTERN PUBLIC SERVICE COMPANY

Line No.	(1)	(2)	(3) Total	(4) Allocator		(5) Transmission Amount
28	PROJECTED REVENUE REQUIREMENT (w/o incentives)	(ln 141)				$ -
29	REVENUE CREDITS	(Note A)				
30	Account No. 454	(Worksheet B)	-	DA	1.00000	$ -
31	Account No. 456.1	(Worksheet B)	-	DA	1.00000	-
31.1	Account No. 421.1 (or other applicable acct)	(Worksheet B)	-	DA	1.00000	
32	Total Revenue Credits					$ -
33	NET REVENUE REQUIREMENT (w/o incentives)	(ln 28 less ln 32)				$ -
34	NET PLANT CARRYING CHARGE (w/o incentives) (Note B)					
35	Annual Rate	(ln 33 / ln 62 x 100)				0.00%
36	Monthly Rate	(ln 35 / 12)				0.00%
37	GROSS PLANT CARRYING CHARGE (w/o incentives) (Note B)					
38	Annual Rate	(ln 33 / ln 48 x 100)				0.00%
39	NET PLANT CARRYING CHARGE, W/O DEPRECIATION (w/o incentives) (Note B)					
40	Annual Rate	((ln 33 - ln 114) / ln 62 x 100)				0.00%
41	NET PLANT CARRYING CHARGE, W/O DEPRECIATION, INCOME TAXES AND RETURN (Note B)					
42	Annual Rate	((ln 33 - ln 114 - ln 138 - ln 139) / ln 62 x 100)				0.00%
43	ADDITIONAL REVENUE REQUIREMENT (w/incentives) (Note C - Worksheet R)					$ -
44	Projected SPP Base Plan Upgrades Revenue Requirement (WsP BPU Summary col (c) total and Note I)					$ -
44a	SPP Base Plan Upgrades Revenue Requirement Prior Year True-up Adjustment (Input)					$ -
44b	SPP Base Plan Upgrades Revenue Requirement Interest on Prior Year True-up Adjustment (Input)					$ -
44c	SPP Base Plan Upgrades Revenue Requirement (Amount Provided to SPP for Next Billing Period)(sum lines 44, 44a ,and 44b)					$ -
45	PROJECTED REVENUE REQUIREMENT	(ln 33 + ln 43 - ln 44c)				$ -

O-SPS Rate Template, Rate Base, Projected, Table 3 Version: 0.1.0 Effective: 8/1/2010

Rate Formula Template

Table 3

PROJECTED

Utilizing Projected Data

For the Billing Period 01/01/yy to 12/31/yy

SOUTHWESTERN PUBLIC SERVICE COMPANY

Line No.	RATE BASE CALCULATION (1)	Data Sources (See "General Notes") (2)	Total (3)	Allocator (4)		Total Transmission (5)
46	GROSS PLANT IN SERVICE					
47	Production	(WsD.1 , Ln 6)	-	NA		
48	Transmission	(WsD.1 , Ln 11)	-	TP	0.00000	-
49	Distribution	(WsD.1 , Ln 16)	-	NA		
50	General Plant	(WsD.1 , Ln 21)	-	W/S	0.00000	-
51	Intangible Plant	(WsD.1 , Ln 23)	-	W/S	0.00000	-
52	TOTAL GROSS PLANT	(sum lns 47 to 51)	-	GP=	0.00000	-
53	ACCUMULATED DEPRECIATION					
54	Production	(WsD.1 , Ln 39)	-	NA		
55	Transmission	(WsD.1 , Ln 44)	-	TP	0.00000	-
56	Distribution	(WsD.1 , Ln 49)	-	NA		
57	General Plant	(WsD.1 , Ln 54)	-	W/S	0.00000	-
58	Intangible Plant	(WsD.1 , Ln 56)	-	W/S	0.00000	-
59	TOTAL ACCUMULATED DEPRECIATION	(sum lns 54 to 58)	-			-
60	NET PLANT IN SERVICE					
61	Production	(ln 47 - ln 54)	-	NA		
62	Transmission	(ln 48 - ln 55)	-			-
63	Distribution	(ln 49 - ln 56)	-	NA		
64	General Plant	(ln 50 - ln 57)	-			-
65	Intangible Plant	(ln 51 - ln 58)	-			-
66	TOTAL NET PLANT IN SERVICE	(sum lns 61 to 65)	-	NP=	0.00000	-
67	ADJUSTMENTS TO RATE BASE	(Note D)				
68	Account No. 281 (enter negative)	273.8.k (Worksheet E)	-	NA		

69	Account No. 282 (enter negative)	275.2.k (Worksheet E)	-	DA		-
70	Account No. 283 (enter negative)	277.9.k (Worksheet E)	-	DA		-
71	Account No. 190	234.8.c (Worksheet E)	-	DA		-
72	Account No. 255 (enter negative)	267.8.h		DA		-
73	Account No. 107	(WsQ , Ln 15, Col C)	-	TP	0.00000	-
74	Net Pre-Funded AFUDC on CWIP included in Rate Base (enter negative)	(Note E) (Worksheet Q, ln 30)	-	TP	0.00000	-
75	Unamortized Balance of Abandoned Incentive Plant	(Note E) (Worksheet E)	-	TP	0.00000	-
76	Unamortized Balance of Extraordinary Property Loss	(Note E) (Worksheet E)	-	TP	0.00000	-
77	TOTAL ADJUSTMENTS	(sum lns 68 to 76)	-			-
78	LAND HELD FOR FUTURE USE (Note F)	(WsD , Ln 84, Col d)	-	TP	0.00000	-
79	WORKING CAPITAL					
80	CWC	(Note G)				
81	Materials & Supplies - Transmission	(WsF , Ln 71, Col d)	-	TP	0.00000	-
82	Materials & Supplies - Other	(WsF , Ln 72, Col d)	-	GP	0.00000	-
83	Prepayments (Account 165) Plant Related	(WsF , Ln 12, Col d)	-	GP	0.00000	-
84	Prepayments (Account 165) Labor Related	(WsF , Ln 18, Col d)	-	W/S	0.00000	-
85	Prepayments (Account 165) Transmission Related	(WsF , Ln 23, Col d)	-	TP	0.00000	-
86	Prepayments (Account 165) Other Not Allocated	(WsF , Ln 31, Col d)	-	NA	0.00000	-
87	TOTAL WORKING CAPITAL	(sum lns 80 to 86)	-			-
88	BALANCE OF NETWORK CREDITS (enter negative) (Note H)		-	TP	0.00000	-
89	RATE BASE (sum lns 66, 77, 78, 87, 88)		-			-

O-SPS Rate Template, Expenses, Projected, Table 4 Version: 0.2.0 Effective: 1/1/2015

Rate Formula Template

Table 4

PROJECTED

Utilizing Projected Data

For the Billing Period 01/01/yy to 12/31/yy

SOUTHWESTERN PUBLIC SERVICE COMPANY

Line No.	EXPENSE, TAXES, RETURN & REVENUE REQUIREMENTS CALCULATION (1)	Data Sources (See "General Notes") (2)	Total (3)	Allocator (4)		Total Transmission (5)
90	OPERATION & MAINTENANCE EXPENSE					
91	Transmission	(WsG , Ln 34, Col c)		-		
92	Less Total Account 561	(WsG , Ln 36, Col c)		-		
93	Add Back Account 561.6	(WsG , Ln 37, Col c)		-		
94	Add Back Account 561.7	(WsG , Ln 38, Col c)		-		
95	Less Total Account 565	(WsG , Ln 39, Col c)		-		
96	Transmission O&M Expense Adjustment	(WsG , Ln 40, Col c)		-		
97	Transmission Subtotal	(ln 91 - ln 92 + ln 93 + ln 94 - ln 95 + ln 96)	-	TP	0.00000	-
98	Administrative and General	(WsG , Ln 63, Col c)		-		
99	Less: Acc. 928, Reg. Com. Exp.	(WsG , Ln 53, Col c)		-		
100	Acct. 930.1, Gen. Advert. Exp.	(WsG , Ln 55, Col c)		-		
101	Acct. 930.2, Miscellaneous Gen. Exp.	(WsG , Ln 56, Col c)		-		
102	Acc. 924, Property Insurance	(WsG , Ln 50, Col c)		-		
103	Balance of A & G	(ln 98 - sum ln 99 to ln 102)	-	W/S	0.00000	-
104	Plus: Acct. 924, Property Insurance	(ln 102)	-	GP	0.00000	-
105	Acct. 928 - Transmission Specific	(Note K) (WsH ln 21, col D)	-	DA	1.00000	-
106	Acct. 928 - Transmission Allocated	(Note K) (WsH ln 21, col E)	-	TP	0.00000	-
107	Acct. 930.2 - Transmission Specific	(Note K) (WsH ln 33, col D)	-	TP	0.00000	-
108	Acct. 930.2 - Transmission Allocated	(Note K) (WsH ln 33, col E)	-	W/S	0.00000	-
109	Transmission Safety and Siting Advertising	(Note K) (WsH ln 46, col B)	-	TP	0.00000	-
110						-
111	A & G Subtotal	(sum lns 103 to 109 less ln 110)		-		-
112	TOTAL O & M EXPENSE	(ln 97 + ln 111)		-		-

113	DEPRECIATION AND AMORTIZATION EXPENSE					
114	Transmission	(Wsl, Ln 5, Col d)	-	TP	0.00000	-
115	Plus: Pre-Funded AFUDC Amortization	(Note E) (Worksheet Q, ln 31)	-	TP	0.00000	-
116	Plus: Recovery of Abandoned Incentive Plant	(Note E) (Worksheet E)	-	TP	0.00000	-
117	Plus: Recovery of Extraordinary Property Loss	(Note E) (Worksheet E)	-	TP	0.00000	-
118	General	(Wsl, Ln 9, Col d)	-	W/S	0.00000	-
119	Intangible	(Wsl, Ln 11, Col d)	-	W/S	0.00000	-
120	TOTAL DEPRECIATION AND AMORTIZATION	(sum lns 114 to 119)	-			-
121	TAXES OTHER THAN INCOME	(Note L)				
122	Labor Related					
123	Payroll	(Worksheet J) 263.i	-	W/S	0.00000	-
124	Plant Related					
125	Property	(Worksheet J) 263.i	-	GP	0.00000	-
126	Franchise & Gross Receipts	(Worksheet J) 263.i	-	NA		-
127	Other - Texas Use	(Worksheet J) 263.i	-	GP	0.00000	-
128	TOTAL OTHER TAXES	(sum lns 123 to 127)	-			-
129	INCOME TAXES	(Note M)				
130	T=1 - {[(1 - SIT) * (1 - FIT)] / (1 - SIT * FIT * p)} =		0.00%			
131	CIT=(T/1-T) * (1-(WCLTD/R)) =		0.00%			
132	where WCLTD=(ln 160) and R= (ln 163)					
133	and FIT, SIT & p are as given in Note M.					
134	1 / (1 - T) = (from ln 130)		-			
135	Amortized Investment Tax Credit (enter negative)	(Worksheet J) 266.8.f	-			
136	Income Tax Calculation	(ln 131 * ln 139)	-			-
137	ITC adjustment	(ln 134 * ln 135)	-	NP	0.00000	-
138	TOTAL INCOME TAXES	(sum lns 136 to 137)	-			-
139	RETURN (Rate Base * Rate of Return)	(ln 89 * ln 163)	-			-
140	INTEREST ON NETWORK CREDITS	(Note H)	-	TP	0.00000	-
141	REVENUE REQUIREMENT (sum lns 112, 120, 128, 138, 139, 140)		-			-

O-SPS Rate Template, Cap Struc, Allocations, Projected, Table 5 Version: 0.2.0 Effective: 10/20/2014

Rate Formula Template

Table 5

PROJECTED

Utilizing Projected Data

For the Billing Period 01/01/yy to 12/31/yy

SOUTHWESTERN PUBLIC SERVICE COMPANY

SUPPORTING CALCULATIONS

Line No.	(1)	(2)	(3)	(4)		(5)
142	TRANSMISSION PLANT INCLUDED IN OATT Transmission Rate (Note N)					
143	Total transmission plant	(ln 48)				-
144	Less Generator Step-up facilities	(WsD.1 , Ln 145)				-
145	Less Radial Line facilities	(Worksheet O)				-
146	Transmission plant included in OATT Trans Rate	(ln 143 - ln 144 - ln 145)				-
147	Percent of transmission plant in OATT Trans Rate	(ln 146 / ln 143)			TP=	0.00000
148	WAGES & SALARY ALLOCATOR (W/S)	(Note O)				
149	Production	(WsG , Ln 69, Col e)	-	NA		-
150	Transmission	(WsG , Ln 70, Col e)	-	TP	0.00000	-
151	Regional Market	(WsG , Ln 71, Col e)	-	NA		-
152	Distribution	(WsG , Ln 72, Col e)	-	NA		-
153	Other	(WsG , Ln 73, Col e)	-	NA		-
154	Total	(sum lns 149 to 153)	-			-
155	W/S Allocator				W/S=	0.00000
156	RETURN (R)					$
157		Long Term Interest (Worksheet K, Ln 51, Col d)				-
158		Preferred Dividends (Worksheet K, Ln 56, Col d)				-
159			$	%	Cost	Weighted
160	Long Term Debt (Worksheet K, Ln 17, Col o)		-	0.00%	0.0000	0.0000
161	Preferred Stock (Worksheet K, Ln 5, Col o)		-	0.00%	0.0000	0.0000
162	Common Stock (Worksheet K, Ln 9, Col o)		-	0.00%	0.1050	0.0000
163	Total (sum lns 160 to 162)		-		R	0.0000

O-SPS Rate Template, Notes, Projected, Table 6 Version: 0.3.0 Effective: 1/1/2015

Rate Formula Template Table 6

PROJECTED Utilizing Projected Data

For the Billing Period 01/01/yy to 12/31/yy

SOUTHWESTERN PUBLIC SERVICE COMPANY

General Notes: a) References to data from FERC Form 1 are indicated as: page#.line#.col.#

Note
Letter

A The revenues credited shall include amounts received directly from the SPP for service under this tariff reflecting SPS's integrated transmission facilities. Revenues associated with FERC annual charges, gross receipts taxes, ancillary services or other facilities revenues shall be excluded from the definition of transmission facilities under this tariff shall not be included as revenue credits. Revenue from coincident peak loads included in the DIVISOR are also not included as revenue credits unless this revenue is offset by a corresponding expense. See Worksheet B for details.

B The annual and monthly net and gross plant carrying charges on page 2 are to be used to compute the revenue requirement for directly assigned facilities,any Base Plan Upgrades, distribution facilities, and radial lines.

C This additional revenue requirement is determined using a net plant carrying charge (fixed carrying charge or FCR) approach. Worksheet R shows the calculation of the additional revenue requirements for each project receiving incentive rate treatment, as accepted by FERC by a separate docket. These individual additional revenue requirements shall be summed, for the then current year, and included here.

D Reflects the transmission related portion of balances in Accounts 281, 282, 283, 190, and 255 as adjusted by any amounts in contra accounts identified as regulatory assets or liabilities related to FASB 106, 109, 133,158 or FASB Interpretation No. 48. Balance of Account 255 is reduced by prior flow throughs and completely excluded if the utility chose to utilize amortization of tax credits against taxable income as discussed in Note M.

E Includes any incentive Construction Work in Progress (CWIP), any related Allowance for Funds Used During Construction (AFUDC), any unamortized balances related to the recovery of abandoned incentive plant costs, any extraordinary property losses and any related depreciation and amortization expense amounts. Formula amounts for all of the foregoing items will remain at $0 until approved by FERC under a separate docket.

F Includes only transmission related or functionally booked as transmission land held for future use.

G Cash Working Capital will be set at and remain $0 until such time as SPS files and receives FERC approval for a lead/lag study.

H Equal to the balance of Network Facilities Upgrades Credits, net of accumulated depreciation, due transmission customers that made lump-sum payments towards the construction of Network Transmission Facilities consistent with Paragraph 657 of Order 2003-A. Excludes interest since interest is added to the revenue requirement on line 140.

I The base plan upgrade revenue requirement will be updated annually in the Annual Update. The BPU revenue requirement will be a projected amount with a true-up to actual adjustment. The updated revenue requirement will be provided to the SPP no later than November 15 for billings effective January 1.

J (Reserved for future use)

K Includes all Regulatory Commission expense itemized in FERC Form 1 at 351.h. Show in Worksheet H how these expense items are assigned to transmission.

FERC Assessment Fees, General Advertising, and Industry Association Dues and Research and Developments costs recorded in 930.2 shall not be assigned to transmission. A & G expenses shall Include specific transmission safety-related advertising and transmission siting advertising costs.

The annual PBOP expense amount will be based on the PBOP expense amount reported in SPS's most recent annual actuarial valuation report as of the date of SPS's Annual Update. SPS will provide a copy of that actuarial report as part of its Annual Update and its Annual Informational Filing to the Commission.

NERC fees recorded in Acct. 928, Regulatory Commission Expenses, or in Acct. 165, Prepayments, shall be excluded from the formula.

L Includes only FICA, unemployment, highway, property and other assessments charged in the current year. Gross receipts tax, taxes related to income,

retail and non-transmission related taxes are excluded.

M The currently effective income tax rate, where FIT is the Federal income tax rate; SIT is the State income tax rate, and p = "the percentage of federal income tax deductible for state income taxes". If the utility is taxed in more than one state, it must attach a work paper showing the name of each state and how the blended or composite SIT was developed. Furthermore, a utility that elected to utilize amortization of tax credits against taxable income, rather than book tax credits to Account No. 255 and reduce rate base, must reduce its income tax expense by the amount of the Amortized Investment Tax Credit (Form 1, 266.8.f) (ln 135) multiplied by (1/1-T) . If the applicable tax rates are zero enter 0.

Inputs Required:	FIT =	0.00%	
	SIT= (Worksheet L)	0.00%	(State Income Tax Rate or Composite SIT)
	p =	0.00%	(percent of FIT deductible for state purposes)

N Removes the dollars of plant booked to transmission plant that is excluded from the Tariff because it does not meet the Tariff's definition of Transmission Facilities, or is booked to transmission (e.g. step-up transformers) that is included in the development of OATT ancillary service rates, or is otherwise not eligible to be recovered under this Tariff.

O Enter dollar amounts. Includes service company labor. Does not include contract labor.

O-SPS Rate Template, Revenue Rqmt, Actual, Table 7 Version: 0.3.0 Effective: 1/1/2016

Rate Formula Template

Table 7

ACTUAL

Utilizing FERC Form 1 Actual Data

For the Billing Period 01/01/yy to 12/31/yy

SOUTHWESTERN PUBLIC SERVICE COMPANY

Line No.	(1)	(2)	(3) Total	(4) Allocator		(5) Transmission Amount
164	REVENUE REQUIREMENT (w/o incentives)	(ln 277)				$ -
165	REVENUE CREDITS	(Note A)				
166	Account No. 454	(Worksheet B)	-	DA	1.00000	$ -
167	Account No. 456.1	(Worksheet B)	-	DA	1.00000	-
167.1	Account No. 421.1 (or other applicable acct)	(Worksheet B)	-	DA	1.00000	-
168	Total Revenue Credits					$ -
169	NET REVENUE REQUIREMENT (w/o incentives)	(ln 164 less ln 168)				$ -
170	NET PLANT CARRYING CHARGE (w/o incentives) (Note B)					
171	Annual Rate	(ln 169 / ln 198 x 100)				0.00%
172	Monthly Rate	(ln 171 / 12)				0.00%
173	GROSS PLANT CARRYING CHARGE (w/o incentives) (Note B)					
174	Annual Rate	(ln 169 / ln 184 x 100)				0.00%
175	NET PLANT CARRYING CHARGE, W/O DEPRECIATION (w/o incentives) (Note B)					
176	Annual Rate	((ln 169 - ln 250) / ln 198 x 100)				0.00%
177	NET PLANT CARRYING CHARGE, W/O DEPRECIATION, INCOME TAXES AND RETURN (Note B)					
178	Annual Rate	((ln 169 - ln 250 - ln 274 - ln 275) / ln 198 x 100)				0.00%
179	ADDITIONAL REVENUE REQUIREMENT (w/incentives) (Note C - Worksheet R)					$ -
180	LESS SPP Base Plan Upgrades Revenue Requirement	(WsP BPU Summary col (d) total and Note I)				$ -
181	ACTUAL REVENUE REQUIREMENT	(ln 169 + ln 179 - ln 180)				$ -

O-SPS Rate Template, Rate Base, Actual, Table 8 Version: 0.1.0 Effective: 8/1/2010

Rate Formula Template

Table 8

ACTUAL

Utilizing FERC Form 1 Actual Data

For the Billing Period 01/01/yy to 12/31/yy

SOUTHWESTERN PUBLIC SERVICE COMPANY

Line No.	RATE BASE CALCULATION (1)	Data Sources (See "General Notes") (2)	Total (3)	Allocator (4)		Total Transmission (5)
182	GROSS PLANT IN SERVICE					
183	Production	(WsD.1 , Ln 78)	-	NA		
184	Transmission	(WsD.1 , Ln 83)	-	TP	0.00000	-
185	Distribution	(WsD.1 , Ln 88)	-	NA		
186	General Plant	(WsD.1 , Ln 93)	-	W/S	0.00000	-
187	Intangible Plant	(WsD.1 , Ln 95)	-	W/S	0.00000	-
188	TOTAL GROSS PLANT	(sum lns 183 to 187)	-	GP=	0.00000	-
189	ACCUMULATED DEPRECIATION					
190	Production	(WsD.1 , Ln 110)	-	NA		
191	Transmission	(WsD.1 , Ln 115)	-	TP	0.00000	-
192	Distribution	(WsD.1 , Ln 120)	-	NA		
193	General Plant	(WsD.1 , Ln 125)	-	W/S	0.00000	-
194	Intangible Plant	(WsD.1 , Ln 127)	-	W/S	0.00000	-
195	TOTAL ACCUMULATED DEPRECIATION	(sum lns 190 to 194)	-			-
196	NET PLANT IN SERVICE					
197	Production	(ln 183 - ln 190)	-	NA		
198	Transmission	(ln 184 - ln 191)	-			-
199	Distribution	(ln 185 - ln 192)	-	NA		
200	General Plant	(ln 186 - ln 193)	-			-
201	Intangible Plant	(ln 187 - ln 194)	-			-
202	TOTAL NET PLANT IN SERVICE	(sum lns 197 to 201)	-	NP=	0.00000	-
203	ADJUSTMENTS TO RATE BASE	(Note D)				
204	Account No. 281 (enter negative)	273.8.k (Worksheet E)	-	NA		
205	Account No. 282 (enter negative)	275.2.k (Worksheet E)	-	DA		-

206	Account No. 283 (enter negative)	277.9.k (Worksheet E)	-	DA		-
207	Account No. 190	234.8.c (Worksheet E)	-	DA		-
208	Account No. 255 (enter negative)	267.8.h		DA		-
209	Account No. 107	(WsQ , Ln 46, Col C)	-	TP	0.00000	-
210	Net Pre-Funded AFUDC on CWIP included in Rate Base (enter negative)	(Note E) (Worksheet Q, ln 61)	-	TP	0.00000	-
211	Unamortized Balance of Abandoned Incentive Plant	(Note E) (Worksheet E)	-	TP	0.00000	-
212	Unamortized Balance of Extraordinary Property Loss	(Note E) (Worksheet E)	-			-
213	TOTAL ADJUSTMENTS	(sum lns 204 to 212)	-			-
214	LAND HELD FOR FUTURE USE (Note F)	(WsD , Ln 84, Col h)	-	TP	0.00000	-
215	WORKING CAPITAL					
216	CWC	(Note G)				-
217	Materials & Supplies - Transmission	(WsF , Ln 79, Col d)	-	TP	0.00000	-
218	Materials & Supplies - Other	(WsF , Ln 80, Col d)	-	GP	0.00000	-
219	Prepayments (Account 165) Plant Related	(WsF , Ln 42, Col d)	-	GP	0.00000	-
220	Prepayments (Account 165) Labor Related	(WsF , Ln 48, Col d)	-	W/S	0.00000	-
221	Prepayments (Account 165) Transmission Related	(WsF , Ln 53, Col d)	-	TP	0.00000	-
222	Prepayments (Account 165) Other Not Allocated	(WsF , Ln 61, Col d)	-	NA	0.00000	-
223	TOTAL WORKING CAPITAL	(sum lns 216 to 222)	-			-
224	BALANCE OF NETWORK CREDITS (enter negative) (Note H)		-	TP	0.00000	-
225	RATE BASE (sum lns 202, 213, 214, 223, 224)		-			-

O-SPS Rate Template, Expenses, Actual, Table 9 Version: 0.3.0 Effective: 1/1/2015

Rate Formula Template

Table 9

ACTUAL

Utilizing FERC Form 1 Actual Data

For the Billing Period 01/01/yy to 12/31/yy

SOUTHWESTERN PUBLIC SERVICE COMPANY

Line No.	EXPENSE, TAXES, RETURN & REVENUE REQUIREMENTS CALCULATION (1)	Data Sources (See "General Notes") (2)	Total (3)	Allocator (4)		Total Transmission (5)
226	OPERATION & MAINTENANCE EXPENSE					
227	Transmission	(WsG , Ln 34, Col e)	-			
228	Less Total Account 561	(WsG , Ln 36, Col e)	-			
229	Add Back Account 561.6	(WsG , Ln 37, Col e)	-			
230	Add Back Account 561.7	(WsG , Ln 38, Col e)	-			
231	Less Total Account 565	(WsG , Ln 39, Col e)	-			
232	Transmission O&M Expense Adjustment	(WsG , Ln 40, Col e)	-			
233	Transmission Subtotal	(ln 227 - ln 228 + ln 229 + ln 230 - ln 231 + ln 232)	-	TP	0.00000	-
234	Administrative and General	(WsG , Ln 63, Col e)	-			
235	Less: Acc. 928, Reg. Com. Exp.	(WsG , Ln 53, Col e)	-			
236	Acct. 930.1, Gen. Advert. Exp.	(WsG , Ln 55, Col e)	-			
237	Acct. 930.2, Miscellaneous Gen. Exp.	(WsG , Ln 56, Col e)	-			
238	Acc. 924, Property Insurance	(WsG , Ln 50, Col e)	-			
239	Balance of A & G	(ln 234 - sum ln 235 to ln 238)	-	W/S	0.00000	-
240	Plus: Acct. 924, Property Insurance	(ln 238)	-	GP	0.00000	-
241	Acct. 928 - Transmission Specific	(Note K) (WsH , Ln 21, Col H)	-	DA	1.00000	-
242	Acct. 928 - Transmission Allocated	(Note K) (WsH , Ln 21, Col I)	-	TP	0.00000	-
243	Acct. 930.2 - Transmission Specific	(Note K) (WsH , Ln 33, Col H)	-	TP	0.00000	-
244	Acct. 930.2 - Transmission Allocated	(Note K) (WsH , Ln 33, Col I)	-	W/S	0.00000	-
245	Transmission Safety and Siting Advertising	(Note K) (WsH , Ln 46, Col C)	-	TP	0.00000	-
246						-
247	A & G Subtotal	(sum lns 239 to 246)	-			-
248	TOTAL O & M EXPENSE	(ln 233 + ln 247)	-			-

249	DEPRECIATION AND AMORTIZATION EXPENSE					
250	Transmission	(WsI, Ln 24, Col d)	-	TP	0.00000	-
251	Plus: Pre-Funded AFUDC Amortization	(Note E) (Worksheet Q, ln 62)	-	TP	0.00000	-
252	Plus: Recovery of Abandoned Incentive Plant	(Note E) (Worksheet E)	-	TP	0.00000	-
253	Plus: Recovery of Extraordinary Property Loss	(Note E) (Worksheet E)	-	TP	0.00000	-
254	General	(WsI, Ln 28, Col d)	-	W/S	0.00000	-
255	Intangible	(WsI, Ln 30, Col d)	-	W/S	0.00000	-
256	TOTAL DEPRECIATION AND AMORTIZATION	(sum lns 250 to 255)	-			-
257	TAXES OTHER THAN INCOME	(Note L)				
258	Labor Related					
259	Payroll	(Worksheet J) 263.i	-	W/S	0.00000	-
260	Plant Related					
261	Property	(Worksheet J) 263.i	-	GP	0.00000	-
262	Franchise & Gross Receipts	(Worksheet J) 263.i	-	NA		-
263	Other - Texas Use	(Worksheet J) 263.i	-	GP	0.00000	-
264	TOTAL OTHER TAXES	(sum lns 259 to 263)	-			-
265	INCOME TAXES	(Note M)				
266	T=1 - {[(1 - SIT) * (1 - FIT)] / (1 - SIT * FIT * p)} =		0.00%			
267	CIT=(T/1-T) * (1-(WCLTD/R)) =		0.00%			
268	where WCLTD=(ln 296) and R= (ln 299)					
269	and FIT, SIT & p are as given in Note M.					
270	1 / (1 - T) = (from ln 266)		-			
271	Amortized Investment Tax Credit (266.8.f) (enter negative)	(Worksheet J) 266.8.f	-			
272	Income Tax Calculation	(ln 267 * ln 275)	-			-
273	ITC adjustment	(ln 270 * ln 271)	-	NP	0.00000	-
274	TOTAL INCOME TAXES	(sum lns 272 to 273)	-			-
275	RETURN (Rate Base * Rate of Return)	(ln 225 * ln 299)	-			-
276	INTEREST ON NETWORK CREDITS	(Note H)	-	TP	0.00000	-
277	REVENUE REQUIREMENT	(sum lns 248, 256, 264, 274, 275, 276)	-			-

O-SPS Rate Template, Cap Struc, Allocations, Actual, Table 10 Version: 0.2.0 Effective: 108/20/2014

Rate Formula Template

Table 10

ACTUAL

Utilizing FERC Form 1 Actual Data

For the Billing Period 01/01/yy to 12/31/yy

SOUTHWESTERN PUBLIC SERVICE COMPANY

SUPPORTING CALCULATIONS

Line No.	(1)	(2)	(3)	(4)		(5)
278	TRANSMISSION PLANT INCLUDED IN OATT Transmission Rate (Note N)					
279	Total transmission plant	(ln 184)				-
280	Less Generator Step-up facilities	(WsD.1 , Ln 147)				-
281	Less Radial Line facilities	(Worksheet O)				-
281a	Plus Radial Line facilities true-up	(Worksheet M)				-
282	Transmission plant included in OATT Trans Rate	(ln 279 - ln 280 - ln 281-281a)				-
283	Percent of transmission plant in OATT Trans Rate	(ln 282 / ln 279)			TP=	0.00000
284	WAGES & SALARY ALLOCATOR (W/S)	(Note O)				
285	Production	(WsG , Ln 69, Col i)	-	NA		-
286	Transmission	(WsG , Ln 70, Col i)	-	TP	0.00000	-
287	Regional Market	(WsG , Ln 71, Col i)	-	NA		-
288	Distribution	(WsG , Ln 72, Col i)	-	NA		-
289	Other	(WsG , Ln 73, Col i)	-	NA		-
290	Total	(sum lns 285 to 289)	-			-
291	W/S Allocator				W/S=	0.00000
292	RETURN (R)					$
293		Long Term Interest (Worksheet K, Ln 51, Col h)				-
294		Preferred Dividends (Worksheet K, Ln 56, Col h)				-
295			$	%	Cost	Weighted
296	Long Term Debt (Worksheet K, Ln 36, Col o)		-	0.00%	0.0000	0.0000
297	Preferred Stock (Worksheet K, Ln 23, Col o)		-	0.00%	0.0000	0.0000
298	Common Stock (Worksheet K, Ln 27, Col o)		-	0.00%	0.1050	0.0000
299	Total (sum lns 296 to 298)		-		R	0.0000

O-SPS Rate Template, Notes, Actual, Table 11 Version: 0.3.0 Effective: 1/1/2015

Rate Formula Template Table 11

ACTUAL Utilizing FERC Form 1 Actual Data

For the Billing Period 01/01/yy to 12/31/yy

SOUTHWESTERN PUBLIC SERVICE COMPANY

General Notes: a) References to data from FERC Form 1 are indicated as: page#.line#.col.#

Note
Letter

A The revenues credited shall include amounts received directly from the SPP for service under this tariff reflecting SPS's integrated transmission facilities. Revenues associated with FERC annual charges, gross receipts taxes, ancillary services or other facilities revenues shall be excluded from the definition of transmission facilities under this tariff shall not be included as revenue credits. Revenue from coincident peak loads included in the DIVISOR are also not included as revenue credits unless this revenue is offset by a corresponding expense. See Worksheet B for details.

B The annual and monthly net and gross plant carrying charges on page 7 are to be used to compute the revenue requirement for directly assigned facilities, any Base Plan Upgrades, distribution facilities, and radial lines.

C This additional revenue requirement is determined using a net plant carrying charge (fixed carrying charge or FCR) approach. Worksheet R shows the calculation of the additional revenue requirements for each project receiving incentive rate treatment, as accepted by FERC by a separate docket. These individual additional revenue requirements shall be summed, for the then current year, and included here.

D Reflects the transmission related portion of balances in Accounts 281, 282, 283, 190, and 255 as adjusted by any amounts in contra accounts identified as regulatory assets or liabilities related to FASB 106, 109, 133,158 or FASB Interpretation No. 48. Balance of Account 255 is reduced by prior flow throughs and completely excluded if the utility chose to utilize amortization of tax credits against taxable income as discussed in Note M.

E Includes any incentive Construction Work in Progress (CWIP), any related Allowance for Funds Used During Construction (AFUDC), any unamortized balances related to the recovery of abandoned incentive plant costs, any extraordinary property losses and any related depreciation and amortization expense amounts. Formula amounts for all of the foregoing items will remain at $0 until approved by FERC under a separate docket.

F Includes only transmission related or functionally booked as transmission land held for future use.

G Cash Working Capital will be set at and remain $0 until such time as SPS files and receives FERC approval for a lead/lag study.

H Equal to the balance of Network Facilities Upgrades Credits, net of accumulated depreciation, due transmission customers that made lump-sum payments towards the construction of Network Transmission Facilities consistent with Paragraph 657 of Order 2003-A. Excludes interest since interest is added to the revenue requirement on line 276.

I The base plan upgrade revenue requirement will be updated annually in the Annual Update. The BPU revenue requirement will be a projected amount with a true-up to actual adjustment. The updated revenue requirement will be provided to the SPP no later than November 15 for billings effective January 1.

J (Reserved for future use)

K Includes all Regulatory Commission expense itemized in FERC Form 1 at 351.h. Show in Worksheet H how these expense items are assigned to transmission. FERC Assessment Fees, General Advertising, and Industry Association Dues and Research and Developments costs recorded in 930.2 shall not be assigned to transmission. A & G expenses shall Include specific transmission safety-related advertising and transmission siting advertising costs.

The annual PBOP expense amount will be based on the PBOP expense amount reported in SPS's most recent annual actuarial valuation report as of the date of SPS's Annual Update. SPS will provide a copy of that actuarial report as part of its Annual Update and its Annual Informational Filing to the Commission.

NERC fees recorded in Acct. 928, Regulatory Commission Expenses, or in Acct. 165, Prepayments, shall be excluded from the formula.

L Includes only FICA, unemployment, highway, property and other assessments charged in the current year. Gross receipts tax, taxes related to income, retail and non-transmission related taxes are excluded.

M The currently effective income tax rate, where FIT is the Federal income tax rate; SIT is the State income tax rate, and p = "the percentage of federal income tax deductible for state income taxes". If the utility is taxed in more than one state, it must attach a work paper showing the name of each state and how the blended or composite SIT was developed. Furthermore, a utility that elected to utilize amortization of tax credits against taxable income, rather than book tax credits to Account No. 255 and reduce rate base, must reduce its income tax expense by the amount of the Amortized Investment Tax Credit (Form 1, 266.8.f) (ln 271) multiplied by (1/1-T) . If the applicable tax rates are zero enter 0.

Inputs Required:	FIT =	0.00%	
	SIT= (Worksheet L)	0.00%	(State Income Tax Rate or Composite SIT)
	p =	0.00%	(percent of FIT deductible for state purposes)

N Removes the dollars of plant booked to transmission plant that is excluded from the Tariff because it does not meet the Tariff's definition of Transmission Facilities, or is booked to transmission (e.g. step-up transformers) that is included in the development of OATT ancillary service rates,or is otherwise not eligible to be recovered under this Tariff.

O Enter dollar amounts. Includes service company labor. Does not include contract labor.

O-SPS Rate Template, Schedule 1 Rate, Table 12 Version: 0.1.0 Effective: 8/1/2010

Schedule 1 Rate Formula Template

Table 12

Southwestern Public Service Company

A.	Schedule 1 - Projected ARR for Billing Period 01/01/20yy to 12/31/20yy		
1	Total Load Dispatch and Scheduling (Account 561)	WsG OM - WS	$0
2	Less: Load Dispatch - Scheduling, System Control and Dispatch Services	WsG - Acct 561.4	$0
3	Less: Transmission Service Studies	WsG - Acct 561.6	$0
4	Less: Generation Interconnection Studies	WsG - Acct 561.7	$0
5	Less: Load Dispatch - Reliability, Planning & Standards Development Services	WsG - Acct 561.8	$0
6	Total 561 Costs for Projected Schedule 1 ARR	(Ln 1 - Sum of Lines 2 through 5)	$0
7	Less: Schedule 1 Point to Point Projected Revenues	WsB Rev Credits	$0
8	Projected Schedule 1 ARR Without True-up Adjustments	(Ln 6 - Ln 7)	$0
9	Prior Year True-up Adjustment	Input from Prior Year True-up	
10	Interest On Prior Year True-up Adjustment	Input from Prior Year	
11	Projected Schedule 1 ARR	(Ln 8 + Ln 9 + Ln 10)	$0
B.	Schedule 1 Rate Calculations		
12	Projected Average 12-Mo. Demand	WsC Divisor	0 kW
13	Monthly Point to Point Rate in $/kW - Month	((Line 11 /Line 12) /12)	$0.000 kW
14	Weekly Point to Point Rate in $/kW - Weekly	((Line 11 /Line 12) /52)	$0.000 kW
15	Daily Point to Point Rate in $/kW - Day	((Line 11 /Line 12) /365)	$0.000 kW
16	Hourly Point to Point Rate in $/mW - Hourly	((Line 11 /Line 12) /8760 * 1000)	$0.000 mW
17	**SECTIONS C AND D USED ONLY FOR TRUE-UP, ANNUAL UPDATE WILL BE BLANK**		
C.	Schedule 1 - Actual ARR for the Billing Period 01/01/20yy to 12/31/20yy		
18	Total Load Dispatch and Scheduling (Account 561)	WsG OM - WS	$0
19	Less: Load Dispatch - Scheduling, System Control and Dispatch Services	WsG - Acct 561.4	$0
20	Less: Transmission Service Studies	WsG - Acct 561.6	$0
21	Less: Generation Interconnection Studies	WsG - Acct 561.7	$0
22	Less: Load Dispatch - Reliability, Planning & Standards Development Services	WsG - Acct 561.8	$0
23	Total 561 Costs for Actual Schedule 1 ARR	(Ln 18 - Sum of Lines 19 through 22)	$0
24	Less: Schedule 1 Point to Point Actual Revenues Billed	WsB Rev Credits	$0
25	Actual Schedule 1 ARR	(Ln 23 - Ln 24)	$0
	True Up from Billing Period to be Included in Projected Schedule 1 ARR:		
26	Revenue Requirement True-Up:		
27	Actual Schedule 1 ARR calculated above	(Ln 25)	$0
28	Projected Schedule 1 ARR calculated above	(Ln 8)	$0

29	ARR True-up Amount (Over recovery = credit; under recovery = debit)	(Ln 27 - Ln 28)	$0
30	Volume True-Up:		
31	Actual Divisor Load for the Billing Period	WsC Divisor	0 kW
32	Projected Divisor Load for the Billing Period	(Ln 12)	0 kW
33	Volume Adjustment	(Ln 32 - Ln 31)	0
34	Projected Zonal Rate per kw-yr for the Billing Period	(Ln 28 / Ln 32)	$0.0000
35	Actual Zonal Rate per kw-yr for the Billing Period	(Ln 27 / Ln 31)	$0.0000
36	Volume Revenue Adjustment (Over recovery = credit; under recovery = debit)	(Ln 33 * Ln 34)	$0
37	Net Schedule 1 True-up Adjustment (Over Recovery = credit; under recovery = debit)	(Ln 29 + Ln 36)	$0
38	Interest True-up Amount	(Ln 68)	$0

D. Interest Calculation:

			FERC Quarterly Interest Rates	Monthly Interest Rate
39				
40				
41	Months			
42	January - Projected Yr 20yy		0.00%	0.0000
43	February		0.00%	0.0000
44	March		0.00%	0.0000
45	April		0.00%	0.0000
46	May		0.00%	0.0000
47	June		0.00%	0.0000
48	July		0.00%	0.0000
49	August		0.00%	0.0000
50	September		0.00%	0.0000
51	October		0.00%	0.0000
52	November		0.00%	0.0000
53	December		0.00%	0.0000
54	January - True-up Yr 20yy		0.00%	0.0000
55	February		0.00%	0.0000
56	March		0.00%	0.0000
57	April		0.00%	0.0000
58	May		0.00%	0.0000
59	June		0.00%	0.0000
60	July		0.00%	0.0000
61	August		0.00%	0.0000
62	September		0.00%	0.0000
63	Average Monthly Interest Rate			0.0000
64	Over/Under Recovery Amount	(Line 37)		$0
65	Average Monthly Interest Rate	(Line 63)		0.0000
66	Monthly Interest Recovery Amount	(Line 64 * Line 65)		$0
67	Number of Months for Interest Recovery Amount			24

68	Interest Recovery Amount (Line 67 * Line 66)	$0

69 Note:

70 The interest is calculated using the interest rate posted on the FERC website.

71 See link to website below.

72 http://www.ferc.gov/legal/acct-matts/interest-rates.asp#skipnavsub

O-SPS Rate Template, Wksht A, True-up Adj, Table 13 Version: 0.2.0 Effective: 7/5/2011

Southwestern Public Service Company — Worksheet A

Worksheet A - Projected Billing Year True-Up Adjustment and Interest Calculation — Table 13

Line No.		
1	I. Revenue Requirement True-up:	
2	Projected Revenue Requirement for the Prior Rate Year - (ARR Projected Data ln 33 + ln 43)	$ -
3	Actual Revenue Requirement for the True-up Year – (ARR Actual Data ln 169 + ln 179)	$ -
4	Revenue Requirement True-up Adjustment (ln 3 – ln 2)	$ -
5	II. SPP Base Plan Upgrades Revenue Requirement True-up:	
6	Projected BPU Revenue Requirement for the Prior Rate Year (ARR – Projected Data ln 44 col (5))	$ -
7	Actual BPU Revenue Requirement for the True-up Rate Year (ARR – Actual Data ln 180 col (5))	$ -
8	SPP BPU True-up (ln 7 – ln 6)	$ -
9	Total Revenue Requirement True-up Adjustment (ln 4 – ln 8)	$0
10	III. Volume True-up:	
11	Projected Divisor Load for the Prior Rate Year, - (WsC Divisor ln 14 * 1,000)	0 kw
12	Actual Divisor Load for the Prior Rate Year, - (WsC Divisor ln 28 * 1,000)	0 kw
13	Volume Adjustment (ln 11 – ln 12)	0 kw
14	Projected Zonal Rate per kw-yr for the Prior Rate Year - 20yy ((ln 2 - ln 6) / ln 11)	$0.0000
15	Actual Zonal Rate per kw-yr for the Prior Rate Year - 20yy ((ln 3 / line 7) / ln 12)	$0.0000
16	Volume Revenue Adjustment (ln 13 x ln 14)	$0
17	Net True-up Adjustment (ln 9 + ln 16)	$0

18 IV. Interest Calculation:

	Months	Projected Billing Year FERC Quarterly Interest Rates	Monthly Interest Rate
24	January - Projected Yr 20yy	0.00%	0.0000
25	February	0.00%	0.0000
26	March	0.00%	0.0000
27	April	0.00%	0.0000
28	May	0.00%	0.0000
29	June	0.00%	0.0000
30	July	0.00%	0.0000
31	August	0.00%	0.0000

32	September	0.00%	0.0000
33	October	0.00%	0.0000
34	November	0.00%	0.0000
35	December	0.00%	0.0000
36	January - True-up Yr 20yy	0.00%	0.0000
37	February	0.00%	0.0000
38	March	0.00%	0.0000
39	April	0.00%	0.0000
40	May	0.00%	0.0000
41	June	0.00%	0.0000
42	July	0.00%	0.0000
43	August	0.00%	0.0000
44	September	0.00%	0.0000
45	Average Monthly Interest Rate		0.0000

			Annual Revenue Requirement (ARR) True-up	SPP BPU Revenue Requirement True-up
46	Over/Under Recovery Amount (ARR sum of lines 4 and 16; BPU line 8 amount)		$0	$0
47	Average Monthly Interest Rate (ln 45)		0.0000	0.0000
48	Monthly Interest Recovery Amount (ln 46 x ln 47)		$0	$0
49	Number of Months for Interest Recovery Amount		24	24
50	Interest Recovery Amount (ln 49 x ln 48)		$0	$0
51	Prior Year True-up Adjustment (ln 46)	(Input to Annual Update)	$0	$0
52	Interest on Prior Year True-up Adjustment (ln 50)	(Input to Annual Update)	$0	$0

53 Note:
54 The interest is calculated using the interest rate posted on the FERC website.
55 See link to website below.

56 http://www.ferc.gov/legal/acct-matts/interest-rates.asp#skipnavsub

O-SPS Rate Template, Wksht A.1, Pr Period Corr True-up, Table 14 Version: 0.1.0 Effective: 8/1/2010

Southwestern Public Service Company — Worksheet A.1

Worksheet A.1 - Prior Period Correction True-Up with Interest Calculation — Table 14

Line No.			
1	Explanation of Prior Period Correction:		
2			
3			
4	Rate Year Prior Period Correction Applicable to (input year)		
5	Effective True-up Year for Rate Year Prior Period Correction (line 4 year + 2 years)		0
6	Year Prior Period Correction Settled/Agreed (input)		
7	Rate Year Prior Period Correction Will be Included in ATRR (line 6 year + 1 year)		0
8	Number of Months Prior Period Correction Subject to Interest ((ln 7 year - ln 4 year) * 12)		0
9	I. Revenue Requirement True-up:		
10	Revenue Requirement for Prior Period Correction True-up Year without Prior Period Correction (input)		
11	Revised Revenue Requirement for True-up Year with Prior Period Correction (input)		
12	Revenue Requirement True-up Adjustment (Over Recovery is a Credit, Under Recovery is a Debit) (ln 11 - ln 10)		$0
13	II. Volume True-up:		
14	Divisor for Prior Period Correction True-up Year without Prior Period Correction (input)		kw
15	Divisor for True-up Year with Prior Period Correction (input)		kw
16	Volume Adjustment (line 14 - line 15)		0 kw
17	Actual Zonal Rate (line 10 / line 14)		$0.0000
18	Revised Zonal Rate (line 11 / line 15)		$0.0000
19	Volume Revenue Adjustment (Over Recovery is a Credit, Under Recovery is a Debit) (line 16 x line 17)		$0
20	Net Prior Period Correction True-up Adjustment (Over Recovery is a Credit, Under Recovery is a Debit) (line 12 + line 19)		$0
21	III. Interest Calculation:		

Line No.	Month/Year	FERC Quarterly Interest Rates	Number of Days in Month	Monthly Interest Rate
22				
23				
24				
25				0.0000
26				0.0000
27				0.0000
28				0.0000
29				0.0000

30		0.0000	
31		0.0000	
32		0.0000	
33		0.0000	
34		0.0000	
35		0.0000	
36		0.0000	
37		0.0000	
38		0.0000	
39		0.0000	
40		0.0000	
41		0.0000	
42		0.0000	
43		0.0000	
44		0.0000	
45		0.0000	
46	Average Monthly Interest Rate	0.0000	
47	Over/Under Recovery Amount (ln 20 amount)		$0
48	Average Monthly Interest Rate (ln 46)		0.0000
49	Monthly Interest Recovery Amount (ln 47 x ln 48)		$0
50	Number of Months for Interest Recovery Amount (from line 8)		0
51	Interest Recovery Amount (ln 50 times ln 49)		$0
52	Prior Period Correction Adjustment (ln 20)	$0 (Input to Annual Update)	
53	Interest on Prior Period Correction Adjustment (ln 51)	$0 (Input to Annual Update)	

54 Note:
55 The interest is calculated using the interest rate posted on the FERC website.
56 See link to website below.
57 http://www.ferc.gov/legal/acct-matts/interest-rates.asp#skipnavsub

O-SPS Rate Template, Wksht A.2, Radial Ln True-up, Table 14.1 Version: 0.0.0 Effective: 8/1/2010

Southwestern Public Service Company
Worksheet A.2 - Radial Line True-Up with Interest Calculation

Worksheet A.2
Table 14.1

Line No.		(a) Revenue Requirement True-Up (Worksheet M)	(b) Month Radial Line Changed (Input)	(c) Months Subject to Interest (12 - Col b)	(d) Average Interest Rate (Col i)	(e) Monthly Interest (Col a * Col d)	(f) Interest Recovery Amount (Col c * Col e)
1	I. Radial Line Interest on True-Up Calculation						
7					0.0000	$0	$0
8					0.0000	$0	$0
9					0.0000	$0	$0
10					0.0000	$0	$0
11							
12							
13	Total	$0					$0

Line No.	II. Interest Rates: Month/Year	(g) FERC Quarterly Interest Rates	(h) Number of Days in Month	(i) Monthly Interest Rate
20				0.0000
21				0.0000
22				0.0000
23				0.0000
24				0.0000
25				0.0000
26				0.0000
27				0.0000
28				0.0000
29	Average Monthly Interest Rate			0.0000

Line No.	III. Total Radial Line Charges	(j) Annual Charge (Worksheet M)	(k) True-Up (Col a)	(l) Interest on True-Up (Col f)	(m) Total Annual Charge (Sum Col j - l)
36			$0	$0	$0
37			$0	$0	$0
38			$0	$0	$0
39			$0	$0	$0
40			$0	$0	$0
41			$0	$0	$0
42			$0	$0	$0
43					
44	Total	$0	$0	$0	$0

Note:
The interest is calculated using the interest rate posted on the FERC website.
See link to website below.
http://www.ferc.gov/legal/acct-matts/interest-rates.asp#skipnavsub

O-SPS Rate Template, Wksht B, Rev Cr, Rents, Table 15 Version: 0.2.0 Effective: 1/1/2016

Southwestern Public Service Company — Worksheet B

Worksheet B - Revenue Credits — Table 15

Gain on Disposition of Property, Projected for Billing Year = 20yy

(Revenue related to sale of transmission assets)

Line No.		(a) Total	(b) Adjustments	(c) Adjusted Total Amount
1	Amortization of Gain on the Sale (Allocated to Transmission) (Note 1)			$ -
2	Gain on disposition of property (Other Related)			$ -
3	Total 421.1 (or other applicable acct)	$ -	$ -	$ -

Gain on Disposition of Property, Actual for Billing Year = 20yy

(Revenue related to sale of transmission assets)

Line No.		(a) Total	(b) Adjustments	(c) Adjusted Total Amount
4	Amortization of Gain on the Sale (Allocated to Transmission) (Note 1)			$ -
5	Gain on disposition of property (Other Related)			$ -
6	Total 421.1 (FF1, p. 117, ln. 40, col. c) (or other applicable acct)	$ -	$ -	$ -

Note 1: In prior transactions, on a case-by-case basis, the Public Utilities Commission of Texas (PUCT) has required SPS to credit to SPS's Texas retail ratepayers a specified percentage of gains on SPS's disposition of certain property. Effective January 1, 2016, for each transmission sale or transfer transaction resulting in a gain recorded in Account 421.1 (gain on disposition of property) or other applicable account, the amount of the gain included in Column (c) on Lines 1 and 4 for that transaction will equal the (i) total amount of the gain for that transaction recorded in Account 421.1 or other applicable account, (ii) multiplied by the Texas retail gain sharing percentage specified by the PUCT for that transaction.

Account 454, Rent from Electric Property, Projected for Billing Year = 20yy — Total Company

(Revenue related to transmission facilities for pole attachments, rentals, etc.)

Line No.		(a) Amount	(b) Allocator	(c)	(d) Allocated Amount	
1	Rent from Electric Property Classified as General		W/S	0.00000	$ -	
2	Rent from Electric Property Classified as Distribution		NA			
3	Rent from Electric Property Classified as Transmission					
3a	Related to Network Transmission Facilities		DA	1.00000	$ -	
3b	Related to Non-Network Transmission Facilities		NA			
4	Rent from Electric Property Classified as Production		NA			
5	Total Account 454 Rent from Electric Property	$ -			$ -	Net Transmission Credits

Account 454, Rent from Electric Property, Actual for Billing Year = 20yy

Total Company

(Revenue related to transmission facilities for pole attachments, rentals, etc.) (FF1, p. 300, ln. 19, col. b)

Line No.		(a) Amount	(b) Allocator	(c)	(d) Allocated Amount	
6	Rent from Electric Property Classified as General		W/S	0.00000	$ -	
7	Rent from Electric Property Classified as Distribution		NA			
8	Rent from Electric Property Classified as Transmission					
8a	Related to Network Transmission Facilities		DA	1.00000	$ -	
8b	Related to Non-Network Transmission Facilities		NA			
9	Rent from Electric Property Classified as Production		NA			
10	Total Account 454 Rent from Electric Property	$ -			$ -	Net Transmission Credits

Data Source - Account 454 General Ledger Detail Analysis

O-SPS Rate Template, Wksht B, Rev Cr, Acct 456.1, Proj, Table 16 Version: 0.2.0 Effective: 1/1/2016

Southwestern Public Service Company | Worksheet B
Worksheet B - Revenue Credits | Table 16

Account 456.1, Revenues from Transmission of Electricity of Others, Projected for Billing Year = 20yy $ -

Line No.	Type	Description	(a) RTO 05	(b) Network Transmission 07	(c) Scheduling, System Control & Dispatch 12	(d) Reactive Supply & Voltage Control 14	(e) Regulation and Frequency 16	(f) Network & Energy Imbalance 19	(g) Network & Interco. Spinning Reserve 22	(h) Supplemental Spinning Reserve 24	(i) FERC Assess Pass Through 26	(j) Total of Line Items
11												0.00
12												0.00
13												0.00
14												0.00
15												0.00
16												0.00
17												0.00
18												0.00
19												0.00
20												0.00
21												0.00
22												0.00
23												0.00
24												0.00
25												0.00
26												
27												0.00
28												0.00
29												0.00
30												0.00
31												0.00
32												0.00
33												0.00
34												0.00
35												0.00
36												0.00
37												0.00
38												0.00
39												0.00
40												0.00
41												
42												

43	Total	0.00	0.00	0.00	0.00	0.00	0.00	0.00	0.00	0.00	0.00
44											
45	Summarized by Type: Note 2										
46	Credit	0.00	0.00	0.00	0.00	0.00	0.00	0.00	0.00	0.00	0.00
47	Divisor	0.00	0.00	0.00	0.00	0.00	0.00	0.00	0.00	0.00	0.00
48	Ancillary	0.00	0.00	0.00	0.00	0.00	0.00	0.00	0.00	0.00	0.00
49	Other	0.00	0.00	0.00	0.00	0.00	0.00	0.00	0.00	0.00	0.00
50	Total	0.00	0.00	0.00	0.00	0.00	0.00	0.00	0.00	0.00	0.00

51 Description of Revenue Types:

52 Ancillary Ancillary services includes regulation & frequency, control & dispatch, voltage

53 control, reactive, spinning reserve, scheduling and generation step-up.

54 Divisor Load associated with these revenues are included in the formula divisor.

55 Credit Revenue credit because load not included in divisor.

56 Note 2 - SPP point to point revenues are being revenue credited here because SPP will not revenue credit these revenues to LSEs.

O-SPS Rate Template, Wksht B, Rev Cr, Acct 456.1, Actual, Table 17 Version: 0.2.0 Effective: 1/1/2016

Southwestern Public Service Company

Worksheet B

Worksheet B - Revenue Credits

Table 17

Account 456.1, Revenues from Transmission of Electricity of Others, Actual for Billing Year = 20yy $ - (Total Company - FF1, p 330, col. N)

Line No.	Type	Description	(a) RTO 05	(b) Network Transmission 07	(c) Scheduling, System Control & Dispatch 12	(d) Reactive Supply & Voltage Control 14	(e) Regulation and Frequency 16	(f) Network & Energy Imbalance 19	(g) Network & Interco. Spinning Reserve 22	(h) Supplemental Spinning Reserve 24	(i) FERC Assess Pass Through 26	(j) Total of Line Items	(k) Total Per FERC Form No. 1
57													
58													
59													
60													
61													
62													
63													
64													
65													
66													
67													
68													
69													
70													
71													
72													
73													
74													
75													
76													
77													
78													
79													
80													
81													
82													
83													

84												
85	Total	0.00	0.00	0.00	0.00		0.00	0.00	0.00	0.00	0.00	0.00
86												
87	Summarized by Type: Note 2											
88	Credit	0.00	0.00	0.00	0.00	0.00	0.00	0.00	0.00	0.00	0.00	
89	Divisor	0.00	0.00	0.00	0.00	0.00	0.00	0.00	0.00	0.00	0.00	
90	Ancillary	0.00	0.00	0.00	0.00	0.00	0.00	0.00	0.00	0.00	0.00	
91	Other	0.00	0.00	0.00	0.00	0.00	0.00	0.00	0.00	0.00	0.00	
92	Total	0.00	0.00	0.00	0.00	0.00	0.00	0.00	0.00	0.00	0.00	

93 Description of Revenue Types:

94 Ancillary — Ancillary services includes regulation & frequency, control & dispatch, voltage
95 control, reactive, spinning reserve, scheduling and generation step-up.

96 Divisor — Load associated with these revenues are included in the formula divisor.

97 Credit — Revenue credit because load not included in divisor.

98 Note 2 - SPP point to point revenues are being revenue credited here because SPP will not revenue credit these revenues to LSEs.

O-SPS Rate Template, Wksht C, Divisor, Table 18 Version: 0.1.0 Effective: 8/1/2010

Southwestern Public Service Company

Worksheet C

Worksheet C - Divisor

Table 18

I. Transmission Network Load (mW) Projected for Billing Year = 20yy

Line No.	Month		Network Load[1]	Plus: Intertie Demand[2]	TO's Transmission Network Load
1					0
2					0
3					0
4					0
5					0
6					0
7					0
8					0
9					0
10					0
11					0
12					0
13	Total		0	0	0
14	12-CP		0	0	0

II. Transmission Network Load (mW) Actual for Billing Year = 20yy

Line No.	Month, Day and Year[1]	Hour Ending[1]	Network Load[1]	Plus: Intertie Demand[2]	TO's Transmission Network Load
15					0
16					0
17					0
18					0
19					0
20					0
21					0
22					0

23					0
24					0
25					0
26					0
27	Total		0	0	0
28	12-CP		0	0	0

III. Notes

1 These are the dates, hour ending and loads at the time of the transmission peak, as reported in FERC Form 1, page 400.

2 Reserved capacity associated with SPS-Public Service Company of Colorado Intertie.

O-SPS Rate Template, Wksht D, Average ADIT, Table 19 Version: 0.1.0 Effective: 8/1/2010

Southwestern Public Service Company
Worksheet D Average Rate Base
Inputs for Average Rate Base Calculations

Worksheet D
Table 19

Line No.	(a)	(b) Projected Beg of Year Balance (Year = 20yy)	(c) Projected End of Year Balance (Year = 20yy)	(d) Projected Average Balance (Year = 20yy)	(e) References for Actual Data	(f) Actual Beg of Year Balance (Year = 20yy)	(g) Actual End of Year Balance (Year = 20yy)	(h) Actual Average Balance (Year = 20yy)
1	Deferred Taxes - Account 281							
2				0				0
3				0				0
4				0				0
5				0				0
6				0				0
7				0				0
8	Total Account 281	0	0	0	FF1, p273 (acct not currently used)	0	0	0
9								
10	Deferred Taxes - Account 282							
11								
12				0				0
13				0				0
14				0				0
15				0				0
16				0				0
17				0				0
18				0				0
19				0				0
20				0				0
21				0				0
22				0				0
23	Total Account 282	0	0	0	FF1, p 275, ln 2, col k	0	0	0
24								
25	Deferred Taxes - Account 283							
26				0				0
27				0				0
28				0				0
29				0				0
30				0				0
31				0				0
32				0				0
33				0				0
34				0				0
35				0				0
36	Total Account 283	0	0	0	FF1, p 277, ln 9, col k	0	0	0
37								
38	Deferred Taxes - Account 190							

39				0				0
40				0				0
41				0				0
42				0				0
43				0				0
44				0				0
45				0				0
46				0				0
47				0				0
48				0				0
49				0				0
50				0				0
51				0				0
52				0				0
53				0				0
54				0				0
55				0				0
56				0				0
57				0				0
58				0				0
59				0				0
60				0				0
61				0				0
62				0				0
63				0				0
64				0				0
65				0				0
66				0				0
67	Total Account 190	0	0	0	FF1, p 234, ln 8, col c	0	0	0
68								
69	Total Deferred Taxes			0				0
70								
71	Unamortized Balance of Abandoned Incentive Plant							
72	(See Formula Template Note E found on pages 6 and 11.)							
73				0				0
74				0				0
75	Total Abandoned Incentive Plant	0	0	0	Company Records	0	0	0
76								
77	Unamortized Balance of Extraordinary Property Loss (Note E)							
78	(See Formula Template Note E found on pages 6 and 11.)							
79				0				0
80				0				0
81	Total Extraordinary Property Loss	0	0	0	Company Records	0	0	0
82								
83								
84	Land Held for Future Use			0	FF1, p 214			0

O-SPS Rate Template, Wksht D.1, PIS, Accum Deprec, Proj, Table 20 Version: 0.1.0 Effective: 8/1/2010

Southwestern Public Service Company

Worksheet D.1 Rate Base - 13 Month Average

Input for 13 Month Average Rate Base Calculations

Worksheet D.1

Table 20

Line No.	PROJECTED Plant in Service Function	PROJECTED BALANCES PLANT IN SERVICE 01/01/yy	01/31/yy	02/28/yy	03/31/yy	04/30/yy	05/31/yy	06/30/yy	07/31/yy	08/31/yy	09/30/yy	10/31/yy	11/30/yy	12/31/yy	13 Mo Average Balance
1	Production Steam														0
2	Less Asset Retirement Costs (Note 1)														0
3	Production Other														0
4	Less Asset Retirement Costs														0
5															
6	Production Net of ARC	0	0	0	0	0	0	0	0	0	0	0	0	0	0
7															
8	Transmission														0
9	Less Asset Retirement Costs														0
10															
11	Transmission Net of ARC	0	0	0	0	0	0	0	0	0	0	0	0	0	0
12															
13	Distribution														0
14	Less Asset Retirement Costs														0
15															
16	Distribution Net of ARC	0	0	0	0	0	0	0	0	0	0	0	0	0	0
17															
18	General														0
19	Less Asset Retirement Costs														0
20															
21	General Net of ARC	0	0	0	0	0	0	0	0	0	0	0	0	0	0
22															
23	Intangible														0

Southwestern Public Service Company

Worksheet D.1

Worksheet D.1 Rate Base - 13 Month Average

Table 20

Input for 13 Month Average Rate Base Calculations

Line No.	PROJECTED Plant in Service Function	PROJECTED BALANCES PLANT IN SERVICE 01/01/yy	01/31/yy	02/28/yy	03/31/yy	04/30/yy	05/31/yy	06/30/yy	07/31/yy	08/31/yy	09/30/yy	10/31/yy	11/30/yy	12/31/yy	13 Mo Average Balance
24															
25	Total Gross Plant In Service	0	0	0	0	0	0	0	0	0	0	0	0	0	0
26	Less Total Asset Retirment Costs	0	0	0	0	0	0	0	0	0	0	0	0	0	0
27															
28	Total Gross Plant in Service Net of ARC	0	0	0	0	0	0	0	0	0	0	0	0	0	0
29															
30	(Note 1 - ARC not included in projected balance amounts)														
31															

32	PROJECTED						PROJECTED BALANCES DEPRECIATION & AMORTIZATION								
33	Accumulated Depreciation & Amortization														13 Mo Average
34	Function	01/01/yy	01/31/yy	02/28/yy	03/31/yy	04/30/yy	05/31/yy	06/30/yy	07/31/yy	08/31/yy	09/30/yy	10/31/yy	11/30/yy	12/31/yy	Balance
35	Production Steam														0
36	Production Other														0
37	Production - Intangible Amortization														0
38															
39	Total Production	0	0	0	0	0	0	0	0	0	0	0	0	0	0
40															
41	Transmission														0
42	Transmission - Intangible Amortization														0
43															
44	Total Transmission	0	0	0	0	0	0	0	0	0	0	0	0	0	0
45															
46	Distribtution														0
47	Distribtution - Intangible Amortization														0
48															
49	Total Distribution	0	0	0	0	0	0	0	0	0	0	0	0	0	0
50															
51	General														0

PROJECTED BALANCES
Accumulated Depreciation & Amortization

	Function	01/01/yy	01/31/yy	02/28/yy	03/31/yy	04/30/yy	05/31/yy	06/30/yy	07/31/yy	08/31/yy	09/30/yy
52	Intangible Amortization										
53											
54	Total General	0	0	0	0	0	0	0	0	0	0
55											
56	Intangible - Software										
57											
58	Accumulated Depreciation	0	0	0	0	0	0	0	0	0	0
59	Accumulated Amortization	0	0	0	0	0	0	0	0	0	0
60											
61	Depr & Amortization	0	0	0	0	0	0	0	0	0	0
62											
63	NET PLANT IN SERVICE										
64	Production	0	0	0	0	0	0	0	0	0	0
65	Transmission	0	0	0	0	0	0	0	0	0	0
66	Distribution	0	0	0	0	0	0	0	0	0	0
67	General	0	0	0	0	0	0	0	0	0	0

	10/31/yy	11/30/yy	12/31/yy	13 Mo Average Balance
				0
	0	0	0	0
				0
	0	0	0	0
	0	0	0	0
	0	0	0	0
	0	0	0	0
	0	0	0	0
	0	0	0	0
	0	0	0	0

PROJECTED

PROJECTED BALANCES DEPRECIATION & AMORTIZATION

Accumulated Depreciation & Amortization

	Function	01/01/yy	01/31/yy	02/28/yy	03/31/yy	04/30/yy	05/31/yy	06/30/yy	07/31/yy	08/31/yy	09/30/yy	10/31/yy	11/30/yy	12/31/yy	13 Mo Average Balance
68	Intangible	0	0	0	0	0	0	0	0	0	0	0	0	0	0
69															
70	Total Projected Net Plant in Service	0	0	0	0	0	0	0	0	0	0	0	0	0	0
71															
72	Net Plant in Service Check Total	0	0	0	0	0	0	0	0	0	0	0	0	0	0

O-SPS Rate Template, Wksht D.1, PIS, Accum Deprec, Act, Table 21 Version: 0.1.0 Effective: 8/1/2010

Southwestern Public Service Company

Worksheet D.1 Rate Base - 13 Month Average

Input for 13 Month Average Rate Base Calculations

Worksheet D.1

Table 21

ACTUAL

ACTUAL BALANCES PLANT IN SERVICE

Line No.	Plant in Service Function	01/01/yy	01/31/yy	02/28/yy	03/31/yy	04/30/yy	05/31/yy	06/30/yy	07/31/yy	08/31/yy	09/30/yy	10/31/yy	11/30/yy	12/31/yy	13 Mo Average Balance
73	Production Steam														0
74	Less Asset Retirement Costs														0
75	Production Other														0
76	Less Asset Retirement Costs														0
77															
78	Production Net of ARC	0	0	0	0	0	0	0	0	0	0	0	0	0	0
79															
80	Transmission														0
81	Less Asset Retirement Costs														0
82															
83	Transmission Net of ARC	0	0	0	0	0	0	0	0	0	0	0	0	0	0
84															
85	Distribution														0
86	Less Asset Retirement Costs														0
87															

88	Distribution Net of ARC	0	0	0	0	0	0	0	0	0	0	0	0	0	0
89															
90	General														0
91	Less Asset Retirement Costs														0
92															
93	General Net of ARC	0	0	0	0	0	0	0	0	0	0	0	0	0	0
94															
95	Intangible														0
96															
97	Total Gross Plant In Service	0	0	0	0	0	0	0	0	0	0	0	0	0	0
98	Less Total Asset Retirment Costs	0	0	0	0	0	0	0	0	0	0	0	0	0	0
99															
100	Total Gross Plant in Service Net of ARC	0	0	0	0	0	0	0	0	0	0	0	0	0	0
101															
102															
103	ACTUAL					ACTUAL BALANCES DEPRECIATION & AMORTIZATION									
104	Accumulated Depreciation & Amortization													13 Mo Average	
105	Function	01/01/yy	01/31/yy	02/28/yy	03/31/yy	04/30/yy	05/31/yy	06/30/yy	07/31/yy	08/31/yy	09/30/yy	10/31/yy	11/30/yy	12/31/yy	Balance
106	Production Steam														0
107	Production Other														0

Xcel Energy Operating Companies
FERC Electric Tariff, Second Revised Volume No. 1

108	Production - Intangible Amortization														0
109															
110	Total Production	0	0	0	0	0	0	0	0	0	0	0	0	0	0
111															
112	Transmission														0
113	Transmission - Intangible Amortization														0
114															
115	Total Transmission	0	0	0	0	0	0	0	0	0	0	0	0	0	0
116															
117	Distribtution														0
118	Distribtution - Intangible Amortization														0
119															
120	Total Distribution	0	0	0	0	0	0	0	0	0	0	0	0	0	0
121															
122	General														0
123	General - Intangible Amortization														0
124															
125	Total General	0	0	0	0	0	0	0	0	0	0	0	0	0	0
126															
127	Intangible - Software														0
128															

129	Total Accumulated Depreciation	0	0	0	0	0	0	0	0	0	0	0	0	0	0
130	Total Accumulated Amortization	0	0	0	0	0	0	0	0	0	0	0	0	0	0
131															
132	Total Accumulated Depr & Amortization	0	0	0	0	0	0	0	0	0	0	0	0	0	0
133															
134	ACTUAL NET PLANT IN SERVICE														
135	Production	0	0	0	0	0	0	0	0	0	0	0	0	0	0
136	Transmission	0	0	0	0	0	0	0	0	0	0	0	0	0	0
137	Distribution	0	0	0	0	0	0	0	0	0	0	0	0	0	0
138	General	0	0	0	0	0	0	0	0	0	0	0	0	0	0
139	Intangible	0	0	0	0	0	0	0	0	0	0	0	0	0	0
140															
141	Total Projected Net Plant in Service	0	0	0	0	0	0	0	0	0	0	0	0	0	0
142															
143	Net Plant in Service Check Total	0	0	0	0	0	0	0	0	0	0	0	0	0	0
144															
145	GSU PLANT IN SERVICE PROJECTED														0
146															
147	GSU PLANT IN SERVICE ACTUAL														0

O-SPS Rate Template, Wksht E, Accts 281 282 283, Proj, Table 22 Version: 0.1.0 Effective: 8/1/2010

Southwestern Public Service Company
Worksheet E - Rate Base Adjustments

Worksheet E
Table 22

ADIT Account 281 Projected for Billing Year = 20yy

(A) Acc. No.	(B) Identification	(C) Avg Balance from WsD	(D) Retail, Production & Other Related	(E) 100% Transmission Related	(F) Plant Related	(G) Labor Related	(H) Total Included in Ratebase (E)+(F)+(G)	(I) Description
281		-						
281		-						
281		-						
281		-						
281		-						
Subtotal - Form 1, p273 Projected		-	-	-	-	-		
Less FASB 109 Above if not separately removed								
Less FASB 106 Above if not separately removed								
Total		-	-	-	-	-		
Transmission Allocator [GP or W/S]			0.0000%	100.0000%	0.0000%	0.0000%		
Total			0	0	0	0	0	

ADIT Account 282 Projected for Billing Year = 20yy

(A) Acc. No.	(B) Identification	(C) Avg Balance from WsD	(D) Retail, Production & Other Related	(E) 100% Transmission Related	(F) Plant Related	(G) Labor Related	(H) Total Included in Ratebase (E)+(F)+(G)	(I) Description
282		-						
282		-						
282		-						
282		-						
282		-						
282		-						
282		-						
Subtotal - Form 1, p275 Projected		-	-	-	-	-		
Less FASB 109 Above if not separately removed								
Less FASB 106 Above if not separately removed								

Total	-	-	-	-	-		
Transmission Allocator [GP or W/S]		0.0000%	100.0000%	0.0000%	0.0000%		
Total		0	0	0	0	0	

ADIT Account 283 Projected for Billing Year = 20yy

(A)	(B)	(C)	(D)	(E)	(F)	(G)	(H)	(I)
Acc. No.	Identification	Avg Balance from WsD	Retail, Production & Other Related	100% Transmission Related	Plant Related	Labor Related	Total Included in Ratebase (E)+(F)+(G)	Description
283		-						
283		-						
283		-						
283		-						
283		-						
283		-						
283		-						
283		-						
283		-						
283		-						
Subtotal - Form 1, p277 Projected		-	-	-	-	-		
Less FASB 109 Above if not separately removed								
Less FASB 106 Above if not separately removed								
Total		-	-	-	-	-		
Transmission Allocator [GP or W/S]			0.0000%	100.0000%	0.0000%	0.0000%		
Total			0	0	0	0	0	

O-SPS Rate Template, Wksht E, Acct 190, Proj, Table 23 Version: 0.1.0 Effective: 8/1/2010

Southwestern Public Service Company — Worksheet E
Worksheet E - Rate Base Adjustments — Table 23

ADIT Account 190 Projected for Billing Year = 20yy

(A) Acc. No.	(B) Identification	(C) Avg Balance from WsD	(D) Retail, Production & Other Related	(E) 100% Transmission Related	(F) Plant Related	(G) Labor Related	(H) Total Included in Ratebase (E)+(F)+(G)	(I) Description
190		-						
190		-						
190		-						
190		-						
190		-						
190		-						
190		-						
190		-						
190		-						
190		-						

ADIT Account 190 Projected for Billing Year = 20yy

(A) Acc. No.	(B) Identification	(C) Avg Balance from WsD	(D) Retail, Production & Other Related	(E) 100% Transmission Related	(F) Plant Related	(G) Labor Related	(H) Total Included in Ratebase (E)+(F)+(G)	(I) Description
190		-						
190		-						
190		-						
190		-						
190		-						
190		-						
190		-						
190		-						
190		-						
190		-						
190		-						

190		-						
Subtotal - Form 1, p234 Projected		-	-	-	-	-		
Less FASB 109 Above if not separately removed								
Less FASB 106 Above if not separately removed								
Total		-	-	-	-	-		
Transmission Allocator [GP or W/S]			0.0000%	100.0000%	0.0000%	0.0000%		
Total			0	0	0	0	0	

Unamortized Balance of Abandoned Incentive Plant Projected for Billing Year = 20yy

(A) Acc. No.	(B) Identification	(C) Average Unamortized Balance from WsD	(D) Current Year Amortization Expense	(E) Unamortized Balance End of Current Year
		-		-
		-		-
Total		-	-	-

Unamortized Balance of Extraordinary Property Loss Projected for Billing Year = 20yy

(A) Acc. No.	(B) Identification	(C) Average Unamortized Balance from WsD	(D) Current Year Amortization Expense	(E) Unamortized Balance End of Current Year
		-		-
		-		-
Total		-	-	-

O-SPS Rate Template, Wksht E, ADIT, Actual, Table 24 Version: 0.1.0 Effective: 8/1/2010

Southwestern Public Service Company
Worksheet E - Rate Base Adjustments

Worksheet E
Table 24

ADIT Account 281 Actual for Billing Year = 20yy

(A) Acc. No.	(B) Identification	(C) Avg Balance from WsD	(D) 100% Non-Transmission Related	(E) 100% Transmission Related	(F) Plant Related	(G) Labor Related	(H) Total Included in Ratebase (E)+(F)+(G)	(I) Description
281		-						
281		-						
281		-						
Subtotal - Form 1, p273		-	-	-	-	-		
Less FASB 109 Above if not separately removed								
Less FASB 106 Above if not separately removed								
Total		-	-	-	-	-		
Transmission Allocator [GP or W/S]			0.0000%	100.0000%	0.0000%	0.0000%		
Total			0	0	0	0	0	

ADIT Account 282 Actual for Billing Year = 20yy

(A) Acc. No.	(B) Identification	(C) Avg Balance from WsD	(D) 100% Non-Transmission Related	(E) 100% Transmission Related	(F) Plant Related	(G) Labor Related	(H) Total Included in Ratebase (E)+(F)+(G)	(I) Description
282		-						
282		-						
282		-						
282		-						
282		-						
Subtotal - Form 1, p275		-	-	-	-	-		
Less FASB 109 Above if not separately removed								
Less FASB 106 Above if not separately removed								
Total		-	-	-	-	-		
Transmission Allocator [GP or W/S]			0.0000%	100.0000%	0.0000%	0.0000%		
Total			0	0	0	0	0	

ADIT Account 283 Actual for Billing Year = 20yy

(A)	(B)	(C)	(D)	(E)	(F)	(G)	(H)	(I)
			100%	100%	0	0	Total Included	
		Avg Balance	Non-Transmission	Transmission	Plant	Labor	in Ratebase	
Acc. No.	Identification	from WsD	Related	Related	Related	Related	(E)+(F)+(G)	Description
283		-						
283		-						
283		-						
283		-						
Subtotal - Form 1, p277		-	-	-	-	-		
Less FASB 109 Above if not separately removed								
Less FASB 106 Above if not separately removed								
Total		-	-	-	-	-		
Transmission Allocator [GP or W/S]			0.0000%	100.0000%	0.0000%	0.0000%		
Total			0	0	0	0	0	

ADIT Account 190 Actual for Billing Year = 20yy

(A)	(B)	(C)	(D)	(E)	(F)	(G)	(H)	(I)
			100%	100%			Total Included	
		Avg Balance	Non-Transmission	Transmission	Plant	Labor	in Ratebase	
Acc. No.	Identification	from WsD	Related	Related	Related	Related	(E)+(F)+(G)	Description
190		-						
190		-						
190		-						
190		-						
190		-						
Subtotal - Form 1, p234		-	-	-	-	-		
Less FASB 109 Above if not separately removed								
Less FASB 106 Above if not separately removed								
Total		-	-	-	-	-		
Transmission Allocator [GP or W/S]			0.0000%	100.0000%	0.0000%	0.0000%		
Total			0	0	0	0	0	

O-SPS Rate Temp, Wksht E, Abnd Plant, Ext Prop Loss, Act, Table 25 Version: 0.1.0 Effective: 8/1/2010

Southwestern Public Service Company
Worksheet E - Rate Base Adjustments

Worksheet E
Table 25

Unamortized Balance of Abandoned Incentive Plant Actual for Billing Year = 20yy

(A) Acc. No.	(B) Identification	(C) Average Unamortized Balance from WsD	(D) Prior Year Amortization Expense	(E) Unamortized Balance End of Prior Year
		-		-
		-		-
Total		-	-	-

Unamortized Balance of Extraordinary Property Loss Actual for Billing Year = 20yy

(A) Acc. No.	(B) Identification	(C) Average Unamortized Balance from WsD	(D) Prior Year Amortization Expense	(E) Unamortized Balance End of Prior Year
		-		-
		-		-
Total		-	-	-

O-SPS Rate Template, Wksht F, Working Capital, Table 26 Version: 0.1.0 Effective: 8/1/2010

Southwestern Public Service Company — Worksheet F
Worksheet F - Working Capital — Table 26

Line No.	(a)	(b) Balance at Jan 1, 20yy	(c) Balance at Dec 31, 20yy	(d) Projected Average Balance
1	I. PREPAYMENTS:			
2	Calculation of Projected Average Balances Based on Actual Prior Year Beginning & Ending			
3	Balances			
8	Plant Related:			
9				0
10				0
11				
12	Total Plant Related:	0	0	0
13				
14	Labor Related:			
15				0
16				0
17				
18	Total Labor Related:	0	0	0
19				
20	Transmission Related:			
21				0
22				
23	Total Transmission Related:	0	0	0
24				
25	Other - Not Included:			
26				0
27				0
28				0
29				0
30				0
31	Total Other Not Included:	0	0	0
32				
33	Total Prepayments Balances:	0	0	0
34				
35	Calculation of Actual Average Balances for the Billing Period 01/01/20yy to 12/31/20yy			
36				
37		Beginning of	End of	Actual Average
38	Plant Related:	Year Balance	Year Balance	Balance
39				0
40				0
41				
42	Total Plant Related:	0	0	0

43				
44	Labor Related:			
45				0
46				0
47				
48	Total Labor Related:	0	0	0
49				
50	Transmission Related:			
51				0
52				
53	Total Transmission Related:	0	0	0
54				
55	Other - Not Included:			
56				0
57				0
58				0
59				0
60				
61	Total Other Not Included:	0	0	0
62				
63	Total Prepayments Balances:	0	0	0
64				
65	II. MATERIALS AND SUPPLIES			
66				
67	Calculation of Projected Average Balances Based on Actual from Prior Year FF1:			
68	(a)	(b)	(c)	(d)
69		FF1 20yy	FF1 20yy	Projected Average
70		Beg of Year	End of Year	Balance
71	Materials and Supplies - Transmission - FF1 - 227.8			0
72	Materials and Supplies - Other - FF1 - 227.11			0
73				
74				
75	Calculation of Actual Average Balances Based on Actual from FF1:			
76				
77		FF1 20yy	FF120yy	Actual Average
78		Beg of Year	End of Year	Balance
79	Materials and Supplies - Transmission - FF1 - 227.8			0
80	Materials and Supplies - Other - FF1 - 227.11			0

O-SPS Rate Template, Wksht G, O & M Exp, W/S allocator, Table 27 Version: 0.1.0 Effective: 8/1/2010

Southwestern Public Service Company | Worksheet G
Worksheet G - O&M Expenses and Wages and Salaries | Table 27

Line No.	(a) FERC Account No.	(b) Description	(c)	(d)	(e) Projected Amount	(f) Reference for Actual	(g) Actual Amount	(h)	(i)
1		TRANSMISSION EXPENSES							
2		*OPERATION*							
3	560	Supervision and Engineering				321.83.b			
4	561.0	Load Dispatching				321.84.b			
5	561.1	Load Dispatching - Reliability				321.85.b			
6	561.2	Load Dispatching - Monitor & Operate Transmission System				321.86.b			
7	561.3	Load Dispatching - Transmission Service & Scheduling				321.87.b			
8	561.4	Scheduling, System Control & Dispatch Services				321.88.b			
9	561.5	Reliability, Planning and Standards Development				321.89.b			
10	561.6	Transmission Service Studies				321.90.b			
11	561.7	Generation Interconnection Studies				321.91.b			
12	561.8	Reliability, Planning and Standards Development Services				321.92.b			
13	562	Station Expenses				321.93.b			
14	563	Overhead Line Expenses				321.94.b			
15	564	Underground Line Expenses				321.95.b			
16	565	Transmission of Electricity by Others				321.96.b			
17	566	Miscellaneous Transmission Expenses				321.97.b			
18	567	Rents				321.98.b			
19		Total Operation			0		0		
20									
21		*MAINTENANCE*							
22	568	Supervision and Engineering				321.101.b			
23	569	Structures				321.102.b			
24	569.1	Computer Hardware				321.103.b			
25	569.2	Computer Software				321.104.b			
26	569.3	Communication Equipment				321.105.b			
27	569.4	Miscellaneous Regional Transmission Plant				321.106.b			
28	570	Station Equipment				321.107.b			
29	571	Overhead Lines				321.108.b			
30	572	Underground Lines				321.109.b			
31	573	Miscellaneous Transmission Plant				321.110.b			
32		Total Maintenance			0		0		
33									
34		Total Transmission O&M			0		0		
35									
36		Less: All 561 Accounts			0		0		
37		Add Back: Account 561.6 - Transmission Service Studies			0		0		
38		Add Back: Account 561.7 - Generation Interconnection Studies			0		0		
39		Less: Account 565 - Transmission of Electricity by Others			0		0		
40		Transmission O&M Expense Adjustment (Note 1)							

41				
42		Total Net Transmission Expense	0	0
43				
44		ADMINISTRATIVE AND GENERAL		
45		*OPERATION*		
46	920	Administrative and General Salaries	323.181.b	
47	921	Office Supplies and Expense	323.182.b	
48	922	(Less) Administrative Expense Transferred	323.183.b	
49	923	Outside Services Employed	323.184.b	
50	924	Property Insurance	323.185.b	
51	925	Injury and Damages	323.186.b	
52	926	Employee Pensions and Benefits	323.187.b	
53	928	Regulatory Commission Expenses	323.189.b	
54	929	(Less) Duplicate Charges-Cr.	323.190.b	
55	930.1	General Advertising Expenses	323.191.b	
56	930.2	Miscellaneous General Expenses	323.192.b	
57	931	Rents	323.193.b	
58		Total Operation	0	0
59				
60		*MAINTENANCE*		
61	935	Maintenance of General Plant	323.196.b	
62				
63		TOTAL ADMINISTRATIVE AND GENERAL	0	0
64				

65	(a)	(b)	(c)	(d)	(e)	(f)	(g)	(h)	(i)
66			Projected				Actual		
67			Direct	Payroll Billed	Total Projected		Direct	Payroll Billed	Total Actual
68		Wages and Salaries Allocator	Payroll	from Service Corp	Amount		Payroll	from Service Corp	Amount
69		Production			0	354.20.b			0
70		Transmission			0	354.21.b			0
71		Regional Market			0	354.22.b			0
72		Distribution			0	354.23.b			0
73		Other			0	354.24,25,26.b			0
74									
75		Total	0	0	0		0	0	0
76									

77 (Note 1: Eliminate Eddy County HVDC transmission O&M expenses.)

O-SPS Rate Template, Wksht H, Misc Expenses, Table 28 Version: 0.2.0 Effective: 1/1/2015

Southwestern Public Service Company — Worksheet H

Worksheet H - Miscellaneous Expenses — Table 28

Line No.	Projected					Actual				
1			Acct 928 Projected for Billing Year =		20yy		Acct 928 Actual for Billing Year =		20yy	
2	(A)	(B)	(C)	(D)	(E)	(F)	(G)	(H)	(I)	
3			100%	100%			100%	100%		
4			Non-	Transmission	Transmission		Non-	Transmission	Transmission	
5	Description	Expense	Transmission	Specific	Allocated	Expense	Transmission	Specific	Allocated	Explanation
6										
7										
8										
9										
10	Total 928		-	-	-	-	-	-	-	-
11										
12										
13			Acct 930.2 Projected for Billing Year =		20yy		Acct 930.2 Actual for Billing Year =		20yy	
14	(A)	(B)	(C)	(D)	(E)	(F)	(G)	(H)	(I)	
15										
16										
17										
18										
19										
20										
21										
22	Total 930.2		-	-	-	-	-	-	-	-
23										
24	Transmission Safety & Siting Advertising (Other Than									
25	in Acct 930.1) Projected for Year =				20yy		Actual Transmission Safety & Siting for Year =			20yy
26										
27	(A)	(B)				(C)		(E)	(F)	
28	Description	Expense				Expense				
29										
30										
31										
32										
33										
34										
35										
36	Total Transmission Safety & Siting Adv.				-		-			

O-SPS Rate Template, Wksht I, Deprec & Amortization Exp, Table 29 Version: 0.1.0 Effective: 8/1/2010

Southwestern Public Service Company — Worksheet I

Worksheet I - Depreciation and Amortization Expense — Table 29

Line No.	(a) Description	(b) Projected Depreciation Expense	(c) Projected Amortization Expense	(d) Projected Total Depr. & Amort. Expense
		Projected Year =	20yy	
1	Steam Production			0
2	Other Production			0
3	Total Production	0	0	0
4				
5	Transmission			0
6				
7	Distribution			0
8				
9	General			0
10				
11	Intangible - Computer Software			0
12				
13	Total	0	0	0
14				
15		Actual Year =	20yy	
16		Actual	Actual	Actual Total
17		Depreciation	Amortization	Depr. & Amort.
18		Expense	Expense	Expense
19				
20	Steam Production			0
21	Other Production			0
22	Total Production	0	0	0
23				
24	Transmission			0
25				
26	Distribution			0
27				
28	General			0
29				
30	Intangible - Computer Software			0
31				
32	Total (FF1, p.336-337, Footnote Data)	0	0	0

O-SPS Rate Template, Wksht J, TOTI, ITC, Table 30 Version: 0.1.0 Effective: 8/1/2010

Worksheet J
Table 30

Southwestern Public Service Company
Worksheet J - Taxes Other Than Income & Investment Tax Credit

Projected for Billing Year = 20yy

Line No.	(A) Description	(B) Expense	(C) Excluded from Rev Requirement	(D) Included in Rev Requirement
1	LABOR RELATED:			
2				
3				
4				
5	Subtotal Labor Related	-	-	-
6				
7	PLANT RELATED:			
8				
9				
10				
11				
12	Subtotal Plant Related - Property	-	-	-
13				
14	OTHER:			
15				
16				
17	FRANCHISE & GROSS RECEIPTS:			
18				
19				
20				
21				
22				
23				
24	Subtotal Franchise & Gross Receipts	-	-	-
25				
26	Total Taxes Other Than Income	-	-	-
27				
28	FF1 page 114, line 14, column c:			
29				
30	Investment Tax Credit Amortized			
31				

Actual for Billing Year = 20yy

	(A) Description	(B) FF1 Reference	(C) Expense	(D) Excluded from Rev Requirement	(E) Included in Rev Requirement
32					
33					
34					
35					
36					
37	LABOR RELATED:				
38					

39				
40				
41	Subtotal Labor Related	-	-	-
42				
43	PLANT RELATED:			
44				
45				
46				
47				
48	Subtotal Plant Related - Property	-	-	-
49				
50	OTHER:			
51				
52				
53	FRANCHISE & GROSS RECEIPTS:			
54				
55				
56				
57				
58				
59				
60	Subtotal Franchise & Gross Receipts	-	-	-
61				
62	Total Taxes Other Than Income			
63				
64	FF1 page 114, line 14, column c:			
65				
66	Investment Tax Credit Amortized 266.8.f			

O-SPS Rate Template, Wksht K, Capital Structure, Table 31 Version: 0.1.0 Effective: 8/1/2010

Southwestern Public Service Company

Worksheet K - Capital Structure

Line No.	(a)	(b)	(c)	(d)	(e)	(f)	(g)	(h)	(i)	(j)	(k)	(l)	(m)	(n)
1								PROJECTED BALANCES						
2	Common Equity - Projected													
3		01/01/yy	01/31/yy	02/28/yy	03/31/yy	04/30/yy	05/31/y	06/30/yy	07/31/yy	08/31/yy	09/30/yy	10/31/yy	11/30/yy	12/31/yy
4	Proprietary Capital													
5	Less Preferred Stock													
6	Less Acct 216.1 Unapprop. Undist. Sub. Earnings													
7	Less Acct 219.1-Accum Other Compre. Income													
8														
9	Common Equity Balances (Ln 4-Ln 5-Ln 6-Ln 7)	0	0	0	0	0	0	0	0	0	0	0	0	0
10								PROJECTED BALANCES						
11	Long Term Debt - Projected													
12														
13	Bonds													
14	Less Reacquired Bonds													

Worksheet K Table 31 (o)														
	15	Other Long Term Debt												
	16													
	17	Debt Balances (Ln 13 - Ln 14+ Ln 15)	0	0	0	0	0	0	0	0	0	0	0	0	0
	18														
	19							ACTUAL BALANCES							
	20	Common Equity - Actual													
13 Month Average Balance	21		01/01/yy	01/31/yy	02/28/yy	03/31/yy	04/30/yy	05/31/yy	06/30/yy	07/31/yy	08/31/yy	09/30/yy	10/31/yy	11/30/yy	12/31/yy
	22	Proprietary Capital													
0	23	Less Preferred Stock													
0	24	Less Acct 216.1 Unapprop. Undist. Sub. Earnings													
0	25	Less Acct 219.1-Accum Other Compre. Income													
0	26														
	27	Common Equity Bal (Ln 22-Ln 23-Ln 24-Ln 25)	0	0	0	0	0	0	0	0	0	0	0	0	0
	28														
	29							ACTUAL BALANCES							
0	30	Long Term Debt - Actual													
	31														
	32	Bonds													
	33	Less Reacquired Bonds													
	34	Other Long Term Debt													
0	35														
0	36	Debt Balances (Ln 32 - Ln 33+ Ln 34)	0	0	0	0	0	0	0	0	0	0	0	0	0

| | | |

Xcel Energy Operating Companies
FERC Electric Tariff, Second Revised Volume No. 1

	(a)	(b)	(c)	(d)	(e)	(f)	(g)	(h)	(i)
37									
38									
39				Projected			FF1 Reference	Actual	
40	Cost of Debt - Annual Interest Expense			20yy			for Actual	20yy	
41									
42	Interest on Long Term Debt						(117.62.c)		
43	Less: Financial Hedge Gain/Expense and Interest Rate Derivative - from Line 62			0				0	
44	Plus: Allowed Hedge and Interest Rate Derivative Recovery - from Line 67			0				0	
45	Amortization of Debt Discount and Expense						(117.63.c)		
46	Amortization of Loss on Reacquired Debt						(117.64.c)		
47	Less: Interest on Long Term Credit Facility						(257.21.i)		
48	Less: Amort of Premium on Debt						(117.65.c)		
49	Less: Amort of Gain on Reacquired Debt						(117.66.c)		
50									
51	Total Interest Expense (Ln 42 - Ln 43 + Ln 44 + Ln 45 + Ln 46 - Lines 47 - Ln 49)			0				0	
52									
53	Average Cost of Debt			0.00%	(Ln 51 / Ln 17, col o)			0.00%	(Ln 51 / Ln 36, col o)
54									
55	Preferred Stock Cost								
56	Dividends on Preferred Stock						(118.29.c)		

Xcel Energy Operating Companies
FERC Electric Tariff, Second Revised Volume No. 1

57	Average Cost of Preferred Stock	0.00%	(Ln 56 / Ln 5 , col o)	0.00%	(Ln 56 / Ln 23 , col o)
58					
59	Financial Hedge Amortization and Interest Rate Derivative (Enter Gains as a Negative Number)				
60					
61					
62	Total Hedge Amortization and Interest Rate Derivative	0		0	
63					
64	Total Average Capital Balance (Ln 9 + Ln 17)	0		0	
65	Financial Hedge Recovery Limit - 7.5 Basis Points of Total Capital	0.00075		0.00075	
66	Limit of Recoverable Amount	0		0	
67	Recoverable Hedge Amortization & Interest Rate Derivative (Lesser of Ln 62 or Ln 66)	0		0	

O-SPS Rate Template, Wksht L, State Income Tax Rate, Table 32 Version: 0.1.0 Effective: 8/1/2010

Southwestern Public Service Company — Worksheet L

Worksheet L - Development of Composite State Income Tax Rate — Table 32

I. Development of Projected Composite State Income Tax Rate for Billing Period
Beginning 01/01/yy

State Income Tax Rate - New Mexico		
Apportionment Factor		
	Projected Effective State Income Tax Rate	0.0000%
State Income Tax Rate - Kansas		
Apportionment Factor		
	Projected Effective State Income Tax Rate	0.0000%
State Income Tax Rate - Oklahoma		
Apportionment Factor		
	Projected Effective State Income Tax Rate	0.0000%
State Income Tax Rate - Texas		
Apportionment Factor		
	Projected Effective State Income Tax Rate	0.0000%
Total Composite State Income Tax Rate		0.0000%

II. Development of Actual Composite State Income Tax Rate for Billing Period
Beginning 01/01/yy

State Income Tax Rate - New Mexico		
Apportionment Factor		
	Actual Effective State Income Tax Rate	0.0000%
State Income Tax Rate - Kansas		
Apportionment Factor		
	Actual Effective State Income Tax Rate	0.0000%
State Income Tax Rate - Oklahoma		
Apportionment Factor		
	Actual Effective State Income Tax Rate	0.0000%
State Income Tax Rate - Texas		
Apportionment Factor		
	Actual Effective State Income Tax Rate	0.0000%
Total Composite State Income Tax Rate		0.0000%

O-SPS Rate Template, Wksht M, Direct Assigmt Rev Rqmt, Table 33 Version: 0.1.0 Effective: 8/1/2010

Southwestern Public Service Company
Worksheet M - Direct Assigned Radial Lines

Worksheet M
Table 33

Actual for Billing Year = 20yy (Note 1)

Line No.		(a) Gross Plant	(b) Net Plant	(c) Last Actual Net Plant Carrying Charge (Annual Rate) Input	(d) Revenue Requirement Col (b) * Col (c)	(e) Radial Line Reclassification Month/ Year In Service of Reclass Input	(f) Prorate Input	(g) Prorate Revenue Requirement Col (f) / 12 * Col (d)	(h) True-Up Adjustment Col (g) - Col (d)	(i) ATRR - TP Allocator Prorate Gross Plant Col (f) /12 * Col (a)	(j) Adj. Gross Plant Adjustment Col (i) - Col (a)
1	Radial Line Direct Assignment (Worksheet O)										
2					$0			$0	$0	$0	$0
3					$0			$0	$0	$0	$0
4					$0			$0	$0	$0	$0
5					$0			$0	$0	$0	$0
6					$0			$0	$0	$0	$0
7					$0			$0	$0	$0	$0
8					$0			$0	$0	$0	$0
9					$0			$0	$0	$0	$0
10					$0			$0	$0	$0	$0
11					$0			$0	$0	$0	$0
12	Total Plant Direct Assigned	$0	$0		$0			$0	$0	$0	$0

Note 1 - Actual prior year end balances will be used for the Gross and Net Plant amounts.

O-SPS Rate Template, Wksht N, Meter Investment, Table 34 Version: 0.1.0 Effective: 8/1/2010

Southwestern Public Service Company — Worksheet N

Worksheet N - Meter Investment — Table 34

Projected (1) for Billing Year = 20yy

Line No.	Meter Type	Number of Meters	Average Replacement Cost per Meter (2)	Total Replacement Cost	Allocated Meter Investment	Average Allocated Meter Investment	No. of Delivery Points	Total Meter Investment
1				$ -	$ -	$ -		
2				$ -	$ -	$ -		
3				$ -	$ -	$ -		$ -
4	Total	-		$ -	(3)			
5	Gross Plant Carrying Charge (4)							
6	Revenue Requirement							$ -

(1) Actual prior year end balances will be used for the projected amounts.

(2) Averages will be based on the most recent available study.

(3) From FERC Form 1, page 207, line 70, column g.

(4) Based on the last actual amount

Southwestern Public Service Company

Worksheet O - Radial Line Investment

Worksheet O

Table 35

Line No.	Radial Line / Asset Location	Total Radial Gross Plant $	Total Radial Net Plant $	Wholesale Radial Gross Plant $	Wholesale Radial Net Plant $	Retail Radial Gross Plant $	Retail Radial Net Plant $	Customer	Reclass?
1	Projected for Billing Year =20yy (Note 1)								
2	In Service Prior to October 1, 2005:								
3									
4									
5									
6									
7									
8									
9									
10									
11									
12									
13									
14									
15	Total In Service Prior to October 1, 2005	$0.00	$0.00	$0.00	$0.00	$0.00	$0.00		
16									
17	In Service October 1, 2005 and Later:								
18									
19									
20									

21								
22	Total In Service October 1, 2005 and Later	$0.00	$0.00	$0.00	$0.00	$0.00	$0.00	
23								
24	Total Projected SPS Radial Plant	$0.00	$0.00	$0.00	$0.00	$0.00	$0.00	
25								
26								
27		Total Radial	Total Radial	Wholesale Radial	Wholesale Radial	Retail Radial	Retail Radial	
28	Radial Line / Asset Location	Gross Plant $	Net Plant $	Gross Plant $	Net Plant $	Gross Plant $	Net Plant $	Customer	Reclass?
29	Actual for Year = 20yy							
30	In Service Prior to October 1, 2005:							
31								
32								
33								
34								
35								
36								
37								
38	Total In Service Prior to October 1, 2005	$0.00	$0.00	$0.00	$0.00	$0.00	$0.00	
39								
40	In Service October 1, 2005 and Later:							
41								
42								
43								
44								
45	Total In Service October 1, 2005 and Later	$0.00	$0.00	$0.00	$0.00	$0.00	$0.00	
46								

47	Total Actual SPS Radial Plant	$0.00	$0.00	$0.00	$0.00	$0.00	$0.00
48							
49	Note 1 - Actual prior year end balances will be used for the projected amounts.						

O-SPS Rate Template, Wksht P, Base Plan Upgrade, Table 36 Version: 0.2.0 Effective: 7/5/2011

Southwestern Public Service Company — Worksheet P

Worksheet P - Revenue Requirement for Base Plan Upgrades — Table 36

I. Determine the Revenue Requirement for Base Plan, Service Upgrades, Sponsored Upgrades and Generator Interconnection Facilities.

Line No.

1 SUMMARY OF ALL SECTIONS

2	(a)	(b)	(c)	(d)	(e)
3	Investment		Projected Revenue	Actual Revenue	SPP Base Plan
4	Year	Project Description	Requirement	Requirement	True-up Amount
5		Section A Base Plan Facilities in Service Project 1	-	-	-
6		Section A Base Plan Facilities in Service Project 2	-	-	-
7		Section A Base Plan Facilities in Service Project 3	-	-	-
8		Section B Base Plan Facilities in Service CWIP Project 1	-	-	-
9		Section C Service Upgrades Project 1	-	-	-
10		Section D Sponsored Upgrades Project 1	-	-	-
11		Section E Generator Interconnect Upgrades Project 1	-	-	-
12					
13					
14					
15	Total Revenue Requirement and True-up Amount		-	-	-

16 A. Base Plan facilities. In Service

17 i. Project 1, Projected (Describe)

18 The calculated Rev. Req. from TO's and Other Zones shown below are only valid for Investment Year
19 matching Projected Year. Values prior and subsequent to the Projected Year will change as Attachment O is updated.
20 These changes will not result in a refund or additional charge related to years prior to the Projected Year.

21 Projected Details

22	Beginning Investment		Projected Year (Input)	20yy
23	Service Year (yyyy)		Projected Year FCR w/o incentives, less depreciation	0.00%
24	Billing Month (1-12)		(From ARR – Projected Data, line 40 col (5))	
25	Depreciation Rate			
26	CIAC (Yes or No)			

27	Investment	Beginning	Addition/(Ret)	Plant Investment	Depreciation	Ending	Revenue
28	Year	Balance	Amount	Balance	Expense	Balance	Requirement
29	-	-	-	-	-	-	-
30	-	-	-	-	-	-	-
31	-	-	-	-	-	-	-
32	-	-	-	-	-	-	-

33	-	-	-	-	-	-	-
34	-	-	-	-	-	-	-
35	-	-	-	-	-	-	-
36	-	-	-	-	-	-	-
37	-	-	-	-	-	-	-
38	-	-	-	-	-	-	-
39	-	-	-	-	-	-	-
40	-	-	-	-	-	-	-
41	-	-	-	-	-	-	-
42	-	-	-	-	-	-	-
43	-	-	-	-	-	-	-
44	-	-	-	-	-	-	-
45	-	-	-	-	-	-	-
46	-	-	-	-	-	-	-
47	-	-	-	-	-	-	-
48	-	-	-	-	-	-	-
49	-	-	-	-	-	-	-
50	-	-	-	-	-	-	-
51	-	-	-	-	-	-	-
52	-	-	-	-	-	-	-
53	-	-	-	-	-	-	-
54	-	-	-	-	-	-	-
55	-	-	-	-	-	-	-
56	-	-	-	-	-	-	-
57	-	-	-	-	-	-	-
58	-	-	-	-	-	-	-
59	-	-	-	-	-	-	-
60	....	....	.....	.....	.....	.....	....

61

62 i. Project 1, Actual (Describe)

63 The calculated Rev. Req. from TO's and Other Zones shown below are only valid for Investment Year
64 matching True-up Year. Values prior and subsequent to the True-up Year will change as Attachment O is updated.
65 These changes will not result in a refund or additional charge related to years prior to the True-up Year.

66	True-up Year Actual Details			
67	Beginning Investment		True-up Year (Actual Year Used for Revenue Requirement - Input)	20yy
68	Service Year (yyyy)		True-up Year (Actual FCR w/o incentives, less depreciation)	0.00%

69	Billing Month (1-12)			(From ARR-Actual Data, line 176 col (5))			
70	Depreciation Rate						
71	CIAC (Yes or No)						
72	Investment	Beginning	Addition/(Ret)	Plant Investment	Depreciation	Ending	Revenue
73	Year	Balance	Amount	Balance	Expense	Balance	Requirement
74	-	-	-	-	-	-	-
75	-	-	-	-	-	-	-
76	-	-	-	-	-	-	-
77	-	-	-	-	-	-	-
78	-	-	-	-	-	-	-
79	-	-	-	-	-	-	-
80	-	-	-	-	-	-	-
81	-	-	-	-	-	-	-
82	-	-	-	-	-	-	-
83	-	-	-	-	-	-	-
84	-	-	-	-	-	-	-
85	-	-	-	-	-	-	-
86	-	-	-	-	-	-	-
87	-	-	-	-	-	-	-
88	-	-	-	-	-	-	-
89	-	-	-	-	-	-	-
90	-	-	-	-	-	-	-
91	-	-	-	-	-	-	-
92	-	-	-	-	-	-	-
93	-	-	-	-	-	-	-
94	-	-	-	-	-	-	-
95	-	-	-	-	-	-	-
96	-	-	-	-	-	-	-
97	-	-	-	-	-	-	-
98	-	-	-	-	-	-	-
99	-	-	-	-	-	-	-
100	-	-	-	-	-	-	-
101	-	-	-	-	-	-	-
102	-	-	-	-	-	-	-
103	-	-	-	-	-	-	-
104	-	-	-	-	-	-	-
105	....	....	.....	.....	.....	.....	....

106

107 A. Base Plan facilities. In Service

108 i. Project 2, Projected (Describe)

109 The calculated Rev. Req. from TO's and Other Zones shown below are only valid for Investment Year
110 matching Projected Year. Values prior and subsequent to the Projected Year will change as Attachment O is updated.
111 These changes will not result in a refund or additional charge related to years prior to the Projected Year.

112	Projected Details						
113	Beginning Investment			Projected Year (Input)			20yy
114	Service Year (yyyy)			Projected Year FCR w/o incentives, less depreciation			0.00%
115	Billing Month (1-12)			(From ARR – Projected Data, line 40 col (5))			
116	Depreciation Rate						
117	CIAC (Yes or No)						
118	Investment	Beginning	Addition/(Ret)	Plant Investment	Depreciation	Ending	Revenue
119	Year	Balance	Amount	Balance	Expense	Balance	Requirement
120	-	-	-	-	-	-	-
121	-	-	-	-	-	-	-
122	-	-	-	-	-	-	-
123	-	-	-	-	-	-	-
124	-	-	-	-	-	-	-
125	-	-	-	-	-	-	-
126	-	-	-	-	-	-	-
127	-	-	-	-	-	-	-
128	-	-	-	-	-	-	-
129	-	-	-	-	-	-	-
130	-	-	-	-	-	-	-
131	-	-	-	-	-	-	-
132	-	-	-	-	-	-	-
133	-	-	-	-	-	-	-
134	-	-	-	-	-	-	-
135	-	-	-	-	-	-	-
136	-	-	-	-	-	-	-
137	-	-	-	-	-	-	-
138	-	-	-	-	-	-	-
139	-	-	-	-	-	-	-
140	-	-	-	-	-	-	-
141	-	-	-	-	-	-	-
142	-	-	-	-	-	-	-
143	-	-	-	-	-	-	-
144	-	-	-	-	-	-	-
145	-	-	-	-	-	-	-
146	-	-	-	-	-	-	-
147	-	-	-	-	-	-	-
148	-	-	-	-	-	-	-
149	-	-	-	-	-	-	-
150	-	-	-	-	-	-	-
151	....	....	.....	.....	.....	.....	....

152

153 i. Project 2, Actual (Describe)

154 The calculated Rev. Req. from TO's and Other Zones shown below are only valid for Investment Year
155 matching True-up Year. Values prior and subsequent to the True-up Year will change as Attachment O is updated.
156 These changes will not result in a refund or additional charge related to years prior to the True-up Year.

157	True-up Year Actual Details						
158	Beginning Investment		True-up Year (Actual Year Used for Revenue Requirement - Input)			20yy	
159	Service Year		True-up Year (Actual FCR w/o incentives, less depreciation)			0.00%	
160	Billing Month		(From ARR-Actual Data, line 176 col (5))				
161	Depreciation Rate						
162	CIAC (Yes or No)						
163	Investment	Beginning	Addition/(Ret)	Plant Investment	Depreciation	Ending	Revenue
164	Year	Balance	Amount	Balance	Expense	Balance	Requirement
165	-	-	-	-	-	-	-
166	-	-	-	-	-	-	-
167	-	-	-	-	-	-	-
168	-	-	-	-	-	-	-
169	-	-	-	-	-	-	-
170	-	-	-	-	-	-	-
171	-	-	-	-	-	-	-
172	-	-	-	-	-	-	-
173	-	-	-	-	-	-	-
174	-	-	-	-	-	-	-
175	-	-	-	-	-	-	-
176	-	-	-	-	-	-	-
178	-	-	-	-	-	-	-
180	-	-	-	-	-	-	-
181	-	-	-	-	-	-	-
182	-	-	-	-	-	-	-
183	-	-	-	-	-	-	-
184	-	-	-	-	-	-	-
185	-	-	-	-	-	-	-
186	-	-	-	-	-	-	-
187	-	-	-	-	-	-	-
188	-	-	-	-	-	-	-
189	-	-	-	-	-	-	-
190	-	-	-	-	-	-	-
191	-	-	-	-	-	-	-
192	-	-	-	-	-	-	-
193	-	-	-	-	-	-	-
194	-	-	-	-	-	-	-
195	-	-	-	-	-	-	-
196	....	....	.....	.....	.....	.....	....
197							

O-SPS Rate Template, Wksht P, Base Plan Upgrade-cont 1, Table 37 Version: 0.2.0 Effective: 7/5/2011

Southwestern Public Service Company — Worksheet P

Worksheet P - Revenue Requirement for Base Plan Upgrades — Table 37

198 A. Base Plan facilities. In Service

199 i. Project 3, Projected (Describe)

200 The calculated Rev. Req. from TO's and Other Zones shown below are only valid for Investment Year
201 matching Projected Year. Values prior and subsequent to Projected Year will change as Attachment O is updated.
202 These changes will not result in a refund or additional charge related to years prior to the Projected Year.

203	Projected Details						
204	Beginning Investment			Projected Year (Input)			20yy
205	Service Year (yyyy)			Projected Year FCR w/o incentives, less depreciation			0.00%
206	Billing Month (1-12)			(From ARR – Projected Data, line 40 col (5))			
207	Depreciation Rate						
208	CIAC (Yes or No)						
209	Investment	Beginning	Addition/(Ret)	Plant Investment	Depreciation	Ending	Revenue
210	Year	Balance	Amount	Balance	Expense	Balance	Requirement
211	-	-	-	-	-	-	-
212	-	-	-	-	-	-	-
213	-	-	-	-	-	-	-
214	-	-	-	-	-	-	-
215	-	-	-	-	-	-	-
216	-	-	-	-	-	-	-
217	-	-	-	-	-	-	-
218	-	-	-	-	-	-	-
219	-	-	-	-	-	-	-
220	-	-	-	-	-	-	-
221	-	-	-	-	-	-	-
222	-	-	-	-	-	-	-
223	-	-	-	-	-	-	-
224	-	-	-	-	-	-	-
225	-	-	-	-	-	-	-
226	-	-	-	-	-	-	-
227	-	-	-	-	-	-	-
228	-	-	-	-	-	-	-
229	-	-	-	-	-	-	-
230	-	-	-	-	-	-	-
231	-	-	-	-	-	-	-

232	-	-	-	-	-	-	-
233	-	-	-	-	-	-	-
234	-	-	-	-	-	-	-
235	-	-	-	-	-	-	-
236	-	-	-	-	-	-	-
237	-	-	-	-	-	-	-
238	-	-	-	-	-	-	-
239	-	-	-	-	-	-	-
240	-	-	-	-	-	-	-
241	-	-	-	-	-	-	-
242	....	....	.....	.....	.....	.....	....

243

244 i. Project 3, Actual (Describe)

245 The calculated Rev. Req. from TO's and Other Zones shown below are only valid for Investment Year
246 matching True-up Year. Values prior and subsequent to the True-up Year will change as Attachment O is updated.
247 These changes will not result in a refund or additional charge related to years prior to the True-up Year.

248	True-up Year Actual Details						
249	Beginning Investment			True-up Year (Actual Year Used for Revenue Requirement - Input)		20yy	
250	Service Year (yyyy)			True-up Year (Actual FCR w/o incentives, less depreciation)			0.00%
251	Billing Month (1-12)			(From ARR-Actual Data, line 176 col (5))			
252	Depreciation Rate						
253	CIAC (Yes or No)						
254	Investment	Beginning	Addition/(Ret)	Plant Investment	Depreciation	Ending	Revenue
255	Year	Balance	Amount	Balance	Expense	Balance	Requirement
256	-	-	-	-	-	-	-
257	-	-	-	-	-	-	-
258	-	-	-	-	-	-	-
259	-	-	-	-	-	-	-
260	-	-	-	-	-	-	-
261	-	-	-	-	-	-	-
262	-	-	-	-	-	-	-
263	-	-	-	-	-	-	-
264	-	-	-	-	-	-	-
265	-	-	-	-	-	-	-
266	-	-	-	-	-	-	-
267	-	-	-	-	-	-	-
268	-	-	-	-	-	-	-
270	-	-	-	-	-	-	-
271	-	-	-	-	-	-	-
272	-	-	-	-	-	-	-
273	-	-	-	-	-	-	-
274	-	-	-	-	-	-	-
275	-	-	-	-	-	-	-

276	-	-	-	-	-	-	-
277	....	....	.....	.....	.....	.....	....

288

289 B. Base Plan facilities. Construction Work in Progress

290 i. Project 1, Projected (Describe)

291 The calculated Rev. Req. from TO's and Other Zones shown below are only valid for Investment Year
292 matching Projected Year. Values prior and subsequent to the Projected Year will change as Attachment O is updated.
293 These changes will not result in a refund or additional charge related to years prior to the Projected Year.

294	Projected Details			
295	Beginning Investment		Projected Year (Input)	20yy
296	Service Year (yyyy)		Projected Year FCR w/o incentives, less depreciation	0.00%
297	Billing Month (1-12)		(From ARR – Projected Data, line 40 col (5))	
298	Depreciation Rate			
299	CIAC (Yes or No)			

300		CWIP	Revenue
301	Months	Balance	Requirement
302	Dec	-	
303	Jan	-	
304	Feb	-	
305	Mar	-	
306	Apr	-	
307	May	-	
308	Jun	-	
309	Jul	-	
310	Aug	-	
311	Sep	-	
312	Oct	-	
313	Nov	-	
314	Dec	-	
315			
316	13 Mo Average	- $	-

317 i. Project 1, Actual (Describe)

318 The calculated Rev. Req. from TO's and Other Zones shown below are only valid for Investment Year
319 matching True-up Year. Values prior and subsequent to the True-up Year will change as Attachment O is updated.
320 These changes will not result in a refund or additional charge related to years prior to the True-up Year.

321 True-up Year Actual Details

322	Beginning Investment		True-up Year (Actual Year Used for Revenue Requirement - Input)	20yy
323	Service Year (yyyy)		True-up Year (Actual FCR w/o incentives, less depreciation)	0.00%
324	Billing Month (1-12)		(From ARR-Actual Data, line 176 col (5))	
325	Depreciation Rate			
326	CIAC (Yes or No)			

327		CWIP	Revenue
328	Months	Balance	Requirement
329	Dec	-	
330	Jan	-	
331	Feb	-	
332	Mar	-	
333	Apr	-	
334	May	-	
335	Jun	-	
336	Jul	-	
337	Aug	-	
338	Sep	-	
339	Nov	-	
340	Dec	-	
341			
342	13 Mo Average	-	$ -

O-SPS Rate Template, Wksht P, Base Plan Upgrade-cont 2, Table 38 Version: 0.2.0 Effective: 7/5/2011

Southwestern Public Service Company — Worksheet P

Worksheet P - Revenue Requirement for Base Plan Upgrades — Table 38

Line No.

343 C. Service Upgrades.

344 i. Project 1, Projected (Describe)

345 The calculated Rev. Req. from TO's and Other Zones shown below are only valid for Investment Year
346 matching Projected Year. Values prior and subsequent to the Porojected Year will change as Attachment O is updated.
347 These changes will not result in a refund or additional charge related to years prior to the Projected Year.

348 Projected Details

349	Beginning Investment	Projected Year (Input)	20yy
350	Service Year (yyyy)	Projected Year FCR w/o incentives, less depreciation	0.00%
351	Billing Month (1-12)	(From ARR – Projected Data, line 40 col (5))	
352	Depreciation Rate		
353	CIAC (Yes or No)		
354			

355	Investment Year	Beginning Balance	Addition/(Ret) Amount	Plant Investment Balance	Depreciation Expense	Ending Balance	Revenue Requirement
356							
357	-	-	-	-	-	-	-
358	-	-	-	-	-	-	-
359	-	-	-	-	-	-	-
360	-	-	-	-	-	-	-
361	-	-	-	-	-	-	-
362	-	-	-	-	-	-	-
363	-	-	-	-	-	-	-
364	-	-	-	-	-	-	-
365	-	-	-	-	-	-	-
366	-	-	-	-	-	-	-
367	-	-	-	-	-	-	-
368	-	-	-	-	-	-	-
369	-	-	-	-	-	-	-
370	-	-	-	-	-	-	-
371	-	-	-	-	-	-	-
372	-	-	-	-	-	-	-
373	-	-	-	-	-	-	-
374	-	-	-	-	-	-	-
375	-	-	-	-	-	-	-

376	-	-	-	-	-	-	-
377	-	-	-	-	-	-	-
378	-	-	-	-	-	-	-
379	-	-	-	-	-	-	-
380	-	-	-	-	-	-	-
381	-	-	-	-	-	-	-
382	-	-	-	-	-	-	-
383	-	-	-	-	-	-	-
384	-	-	-	-	-	-	-
385	-	-	-	-	-	-	-
386	-	-	-	-	-	-	-
387	-	-	-	-	-	-	-
388	....	....	.....	.....	.....	.....	....

389 i. Project 1, Actual (Describe)

390 The calculated Rev. Req. from TO's and Other Zones shown below are only valid for Investment Year
391 matching True-up Year. Values prior and subsequent to the True-up Year will change as Attachment O is updated.
392 These changes will not result in a refund or additional charge related to years prior to the True-up Year.

393	True-up Year Actual Details						
394	Beginning Investment			True-up Year (Actual Year Used for Revenue Requirement - Input)		20yy	
395	Service Year (yyyy)			True-up Year (Actual FCR w/o incentives, less depreciation)			0.00%
396	Billing Month (1-12)			(From ARR-Actual Data, line 176 col (5))			
397	Depreciation Rate						
398	CIAC (Yes or No)						
399							
400	Investment	Beginning	Addition/(Ret)	Plant Investment	Depreciation	Ending	Revenue
401	Year	Balance	Amount	Balance	Expense	Balance	Requirement
402	-	-	-	-	-	-	-
403	-	-	-	-	-	-	-
404	-	-	-	-	-	-	-
405	-	-	-	-	-	-	-
406	-	-	-	-	-	-	-
407	-	-	-	-	-	-	-
408	-	-	-	-	-	-	-
409	-	-	-	-	-	-	-
410	-	-	-	-	-	-	-
411	-	-	-	-	-	-	-
412	-	-	-	-	-	-	-
413	-	-	-	-	-	-	-
414	-	-	-	-	-	-	-
415	-	-	-	-	-	-	-
416	-	-	-	-	-	-	-
417	-	-	-	-	-	-	-

418	-	-	-	-	-	-	-
419	-	-	-	-	-	-	-
420	-	-	-	-	-	-	-
421	-	-	-	-	-	-	-
422	-	-	-	-	-	-	-
423	-	-	-	-	-	-	-
424	-	-	-	-	-	-	-
425	-	-	-	-	-	-	-
426	-	-	-	-	-	-	-
427	-	-	-	-	-	-	-
428	-	-	-	-	-	-	-
429	-	-	-	-	-	-	-
430	-	-	-	-	-	-	-
431	-	-	-	-	-	-	-
432	-	-	-	-	-	-	-
433	....	....	.....	.....	.....	.....	....

434 D. Sponsored Upgrades.

435 i. Project 1, Projected (Describe)

436 The calculated Rev. Req. from Sponsor and Credit shown below are only valid for Investment Year
437 matching Projected Year. Values prior and subsequent to the Projected Year will change as Attachment O is updated.
438 These changes will not result in a refund or additional charge related to years prior to the Projected Year.

439	Projected Details			
440	Beginning Investment		Projected Year (Input)	20yy
441	Service Year (yyyy)		Projected Year FCR w/o incentives, less depreciation	0.00%
442	Billing Month (1-12)		(From ARR – Projected Data, line 40 col (5))	
443	Depreciation Rate			
444	CIAC (Yes or No)			
445				

446	Investment	Beginning	Addition/(Ret)	Plant Investment	Depreciation	Ending	Revenue
447	Year	Balance	Amount	Balance	Expense	Balance	Requirement
448	-	-	-	-	-	-	-
449	-	-	-	-	-	-	-
450	-	-	-	-	-	-	-
451	-	-	-	-	-	-	-
452	-	-	-	-	-	-	-
453	-	-	-	-	-	-	-
454	-	-	-	-	-	-	-
455	-	-	-	-	-	-	-
456	-	-	-	-	-	-	-
457	-	-	-	-	-	-	-
458	-	-	-	-	-	-	-

459	-	-	-	-	-	-	-
460	-	-	-	-	-	-	-
461	-	-	-	-	-	-	-
462	-	-	-	-	-	-	-
463	-	-	-	-	-	-	-
464	-	-	-	-	-	-	-
465	-	-	-	-	-	-	-
466	-	-	-	-	-	-	-
467	-	-	-	-	-	-	-
468	-	-	-	-	-	-	-
469	-	-	-	-	-	-	-
470	-	-	-	-	-	-	-
471	-	-	-	-	-	-	-
472	-	-	-	-	-	-	-
473	-	-	-	-	-	-	-
474	-	-	-	-	-	-	-
475	-	-	-	-	-	-	-
476	-	-	-	-	-	-	-
477	-	-	-	-	-	-	-
478	-	-	-	-	-	-	-
479	....	....	.....	.....	.....	.....	....

480 i. Project 1, Actual (Describe)

481 The calculated Rev. Req. from Sponsor and Credit shown below are only valid for Investment Year
482 matching True-up Year. Values prior and subsequent to the True-up Year will change as Attachment O is updated.
483 These changes will not result in a refund or additional charge related to years prior to the True-up Year.

484	True-up Year Actual Details			
485	Beginning Investment		True-up Year (Actual Year Used for Revenue Requirement - Input)	20yy
486	Service Year (yyyy)		True-up Year (Actual FCR w/o incentives, less depreciation)	0.00%
487	Billing Month (1-12)		(From ARR-Actual Data, line 176 col (5))	
488	Depreciation Rate			
489	CIAC (Yes or No)			
490				

491	Investment	Beginning	Addition/(Ret)	Plant Investment	Depreciation	Ending	Revenue
492	Year	Balance	Amount	Balance	Expense	Balance	Requirement
493	-	-	-	-	-	-	-
494	-	-	-	-	-	-	-
495	-	-	-	-	-	-	-
496	-	-	-	-	-	-	-
497	-	-	-	-	-	-	-

498	-	-	-	-	-	-	-
499	-	-	-	-	-	-	-
500	-	-	-	-	-	-	-
501	-	-	-	-	-	-	-
502	-	-	-	-	-	-	-
503	-	-	-	-	-	-	-
504	-	-	-	-	-	-	-
505	-	-	-	-	-	-	-
506	-	-	-	-	-	-	-
507	-	-	-	-	-	-	-
508	-	-	-	-	-	-	-
509	-	-	-	-	-	-	-
510	-	-	-	-	-	-	-
511	-	-	-	-	-	-	-
512	-	-	-	-	-	-	-
513	-	-	-	-	-	-	-
514	-	-	-	-	-	-	-
515	-	-	-	-	-	-	-
516	-	-	-	-	-	-	-
517	-	-	-	-	-	-	-
518	-	-	-	-	-	-	-
519	-	-	-	-	-	-	-
520	-	-	-	-	-	-	-
521	-	-	-	-	-	-	-
522	-	-	-	-	-	-	-
523	-	-	-	-	-	-	-
524	....	....	.....	.....	.....	.....	....

O-SPS Rate Template, Wksht P, Base Plan Upgrade-cont 3, Table 39 Version: 0.2.0 Effective: 7/5/2011

Southwestern Public Service Company — Worksheet P

Worksheet P - Revenue Requirement for Base Plan Upgrades — Table 39

Line No.

525 E. Generator Interconnect Upgrades.

526 i. Project 1, Projected (Describe)

527 The calculated Rev. Req. from Generator and Credit shown below are only valid for Investment Year
528 matching Projected Year. Values prior and subsequent to the Projected Year will change as Attachment O is updated.
529 These changes will not result in a refund or additional charge related to years prior to the Projected Year.

530 Projected Details

531	Beginning Investment	Projected Year (Input)	20yy
532	Service Year (yyyy)	Projected Year FCR w/o incentives, less depreciation	0.00%
533	Billing Month (1-12)	(From ARR – Projected Data, line 40 col (5))	
534	Depreciation Rate		
535	CIAC (Yes or No)		
536			

537	Investment Year	Beginning Balance	Addition/(Ret) Amount	Plant Investment Balance	Depreciation Expense	Ending Balance	Revenue Requirement
538							
539	-	-	-	-	-	-	-
540	-	-	-	-	-	-	-
541	-	-	-	-	-	-	-
542	-	-	-	-	-	-	-
543	-	-	-	-	-	-	-
544	-	-	-	-	-	-	-
545	-	-	-	-	-	-	-
546	-	-	-	-	-	-	-
547	-	-	-	-	-	-	-
548	-	-	-	-	-	-	-
549	-	-	-	-	-	-	-
550	-	-	-	-	-	-	-
551	-	-	-	-	-	-	-
552	-	-	-	-	-	-	-
553	-	-	-	-	-	-	-
554	-	-	-	-	-	-	-
555	-	-	-	-	-	-	-
556	-	-	-	-	-	-	-

557	-	-	-	-	-	-	-
558	-	-	-	-	-	-	-
559	-	-	-	-	-	-	-
560	-	-	-	-	-	-	-
561	-	-	-	-	-	-	-
562	-	-	-	-	-	-	-
563	-	-	-	-	-	-	-
564	-	-	-	-	-	-	-
565	-	-	-	-	-	-	-
566	-	-	-	-	-	-	-
567	-	-	-	-	-	-	-
568	-	-	-	-	-	-	-
569	-	-	-	-	-	-	-
570	....	....	.....	.....	.....	.....	....

571

572 i. Project 1, Actual (Describe)

573 The calculated Rev. Req. from Generator and Credit shown below are only valid for Investment Year
574 matching True-up Year. Values prior and subsequent to the True-up Year will change as Attachment O is updated.
575 These changes will not result in a refund or additional charge related to years prior to the True-up Year.

576	True-up Year Actual Details						
577	Beginning Investment			True-up Year (Actual Year Used for Revenue Requirement - Input)			20yy
578	Service Year (yyyy)			True-up Year (Actual FCR w/o incentives, less depreciation)			0.00%
579	Billing Month (1-12)			(From ARR-Actual Data, line 176 col (5))			
580	Depreciation Rate						
581	CIAC (Yes or No)						
582							
583	Investment	Beginning	Addition/(Ret)	Plant Investment	Depreciation	Ending	Revenue
584	Year	Balance	Amount	Balance	Expense	Balance	Requirement
585	-	-	-	-	-	-	-
586	-	-	-	-	-	-	-
587	-	-	-	-	-	-	-
588	-	-	-	-	-	-	-
589	-	-	-	-	-	-	-
590	-	-	-	-	-	-	-
591	-	-	-	-	-	-	-
592	-	-	-	-	-	-	-
593	-	-	-	-	-	-	-
594	-	-	-	-	-	-	-
595	-	-	-	-	-	-	-
596	-	-	-	-	-	-	-
597	-	-	-	-	-	-	-

598	-	-	-	-	-	-	-
599	-	-	-	-	-	-	-
600	-	-	-	-	-	-	-
601	-	-	-	-	-	-	-
602	-	-	-	-	-	-	-
603	-	-	-	-	-	-	-
604	-	-	-	-	-	-	-
605	-	-	-	-	-	-	-
606	-	-	-	-	-	-	-
607	-	-	-	-	-	-	-
608	-	-	-	-	-	-	-
609	-	-	-	-	-	-	-
610	-	-	-	-	-	-	-
611	-	-	-	-	-	-	-
612	-	-	-	-	-	-	-
613	-	-	-	-	-	-	-
614	-	-	-	-	-	-	-
615	-	-	-	-	-	-	-
616	....	....	.....	.....	.....	.....	....

O-SPS Rate Template, Wksht Q, Incentive CWIP, Table 40 Version: 0.1.0 Effective: 8/1/2010

Southwestern Public Service Company — Worksheet Q

Worksheet Q - Forecasted Incentive CWIP (Note 1) — Table 40

Projected for Billing Year = 20yy

Line No.		(A) Projected Incentive CWIP	(B) Projected Specific CWIP	(C) Accumulated Balance Projected Incentive CWIP
1	Dec			
2	Jan			-
3	Feb			-
4	Mar			-
5	Apr			-
6	May			-
7	Jun			-
8	Jul			-
9	Aug			-
10	Sep			-
11	Oct			-
12	Nov			-
13	Dec			-
14	Total	-	-	-

15 13 month avg of current year changes to CWIP = Col C - (Goes to Page 3, ln 73)

		(D) Accumulated Pre-Funded AFUDC	(E) Pre-Funded AFUDC Amortization
16	Dec		
17	Jan		
18	Feb		
19	Mar		
20	Apr		
21	May		
22	Jun		
23	Jul		
24	Aug		
25	Sep		
26	Oct		
27	Nov		
28	Dec		
29	Total	-	-

30 13 Month Avg Accumulated Pre-Funded AFUDC = Col D - (Goes to Page 3, ln 74)

31 Pre-Funded AFUDC Amortization = Col E - (Goes to Page 4, ln 115)

Actual for Billing Year = 20yy

		(A) Actual Incentive CWIP	(B) Actual Other CWIP	(C) Accumulated Balance Actual Incentive CWIP
32	Dec			
33	Jan			-
34	Feb			-
35	Mar			-
36	Apr			-
37	May			-
38	Jun			-
39	Jul			-
40	Aug			-
41	Sep			-
42	Oct			-
43	Nov			-
44	Dec			-
45	Total	-	-	-

46 13 month avg of prior year changes to CWIP = Col C - (Goes to Page 8, ln 209)

		(D) Accumulated Pre-Funded AFUDC	(E) Pre-Funded AFUDC Amortization
47	Dec		
48	Jan		
49	Feb		
50	Mar		
51	Apr		
52	May		
53	Jun		
54	Jul		
55	Aug		
56	Sep		
57	Oct		
58	Nov		
59	Dec		
60	Total	-	-

61 13 Month Avg Accumulated Pre-Funded AFUDC = Col D - (Goes to Page 8, ln 210)

62 Pre-Funded AFUDC Amortization = Col E - (Goes to Page 9, ln 251)

63 Note 1: Worksheet Q will remain blank until such time that SPS files for and receives FERC approval
64 for including specific incentive CWIP projects in the formula rate. SPS accounting records will be the
65 source of this data.

O-SPS Rate Template, Wksht R, Incentive Projects, Table 41 Version: 0.2.0 Effective: 10/20/2014

Southwestern Public Service Company — Worksheet R
Worksheet R - Incentive Projects. — Table 41

I. Calculate Return and Income Taxes with hypothetical 100 basis point ROE increase.

Line No. A. Determine "R" with hypothetical 100 basis point increase in ROE.

Line No.				
1	ROE w/o incentives (From Page 5, ln 162)			10.50%
2	ROE with additional 100 basis point incentive			11.50%
3	Determine R (cost of long term debt, cost of preferred stock and percent is from Page 5, lns 160 through162)			
4		%	Cost	Weighted cost
5	Long Term Debt	0.00%	0.0000	0.0000
6	Preferred Stock	0.00%	0.0000	0.0000
7	Common Stock	0.00%	0.1150	0.0000
8			R =	0.0000

B. Determine Return using "R" with hypothetical 100 basis point ROE increase.

9	Rate Base (From Page 3, ln 89)	-
10	R (from A. above)	0.0000
11	Return (Rate Base x R)	-

C. Determine Income Taxes using Return with hypothetical 100 basis point ROE increase.

12	Return (from B. above)	-
13	CIT (From Page 4, ln 131)	0.00%
14	Income Tax Calculation (Return x CIT)	-
15	ITC Adjustment (From Page 4, ln 137)	-
16	Income Taxes	-

II. Calculate Net Plant Carrying Charge Rate (Fixed Charge Rate or FCR) with hypothetical 100 basis point ROE increase.

Line No. A. Determine Net Revenue Requirement less return and Income Taxes.

17	Net Revenue Requirement (From Page 2, ln 33)	-
18	Return (From Page 4, ln 139)	-
19	Income Taxes (From Page 4, ln 138)	-
20	Net Revenue Requirement, Less Return and Taxes	-

B. Determine Net Revenue Requirement with hypothetical 100 basis point increase in ROE.

21	Net Revenue Requirement, Less Return and Taxes	-
22	Return (from I.B. above)	

		-	
23	Income Taxes (from I.C. above)	-	
24	Net Revenue Requirement, with 100 Basis Point ROE increase	-	
25	Depreciation (From Page 4, ln 114)	-	
26	Net Rev. Req, w/100 Basis Point ROE increase, less Depreciation	-	

C. Determine FCR with hypothetical 100 basis point ROE increase.

27	Net Transmission Plant (From Page 3, ln 62)	-	
28	Net Revenue Requirement, with 100 Basis Point ROE increase	-	
29	FCR with 100 Basis Point increase in ROE	0.00%	
30	Net Rev. Req, w/100 Basis Point ROE increase, less Dep.	-	
31	FCR with 100 Basis Point ROE increase, less Depreciation	0.00%	(use when no CIAC is associated with facilities receiving incentives)
32	FCR w/o 100 Basis Point ROE increase, less Depreciation	0.00%	(From Page 2, ln 40)
33	FCR w/o Return, Income Taxes and Depreciation	0.00%	(use when CIAC is associated with facilities receiving incentives)

O-SPS Rate Template, Wksht R, Incent Projects-cont 1, Table 42 Version: 0.1.0 Effective: 8/1/2010

Southwestern Public Service Company
Worksheet R - Incentive Projects.

Worksheet R
Table 42

III. Determine the Additional Revenue Requirement and Revenue Credit for facilities receiving incentives.

A. Facilities receiving incentives accepted by FERC in Docket No.

The calculated Additional Revenue Requirement and Revenue Credit shown below are only valid for Investment Years matching Current Year. Values prior and subsequent to the Current Year will change as Attachment O is updated. These changes will not result in a refund or additional charge related to years prior to the Current Year.

Beginning Balance = Investment in first year and prior year Ending Balance, thereafter
Depreciation Expense = Straight line depreciation equal to Investment divided by Useful Life
Ending Balance = Beginning Balance - Depreciation Expense
Revenue Requirement = FCR * Beginning Balance plus Depreciation Expense, adjusted by Service Month divided by 12 in the first year
Additional Rev. Requirement = Revenue Requirement w/incentives less w/o incentive for the year
Additional Revenue Credit = Revenue Requirement w/o incentives

Line No.	Details			
34	Investment		Current Year	
35	Service Year (yyyy)		ROE increase accepted by FERC (Basis Points)	
36	Service Month (1-12)		FCR w/o incentives, less depreciation	0.00%
37	Useful life		FCR w/incentives approved for these facilities, less dep.	0.00%
38	CIAC (Yes or No)		Annual Depreciation Expense	-

39		Investment	Beginning	Depreciation	Ending	Revenue	Additional Rev.	Additional Rev.
40		Year	Balance	Expense	Balance	Requirement	Requirement	Credit
41	w/o incentives	-	-	-	-	-		$ -
42	w/incentives	-	-	-	-	-	$ -	
43	w/o incentives	-	-	-	-	-		$ -
44	w/incentives	-	-	-	-	-	$ -	
45	w/o incentives	-	-	-	-	-		$ -
46	w/incentives	-	-	-	-	-	$ -	
47	w/o incentives	-	-	-	-	-		$ -
48	w/incentives	-	-	-	-	-	$ -	
49	w/o incentives	-	-	-	-	-		$ -
50	w/incentives	-	-	-	-	-	$ -	
51	w/o incentives	-	-	-	-	-		$ -
52	w/incentives	-	-	-	-	-	$ -	
53	w/o incentives	-	-	-	-	-		$ -
54	w/incentives	-	-	-	-	-	$ -	
55	w/o incentives	-	-	-	-	-		$ -

56	w/incentives	-	-	-	-	-	$ -	
57	w/o incentives	-	-	-	-	-		$ -
58	w/incentives	-	-	-	-	-	$ -	
59	w/o incentives	-	-	-	-	-		$ -
60	w/incentives	-	-	-	-	-	$ -	
61	w/o incentives	-	-	-	-	-		$ -
62	w/incentives	-	-	-	-	-	$ -	
63	w/o incentives	-	-	-	-	-		$ -
64	w/incentives	-	-	-	-	-	$ -	
65	w/o incentives	-	-	-	-	-		$ -
66	w/incentives	-	-	-	-	-	$ -	
67	w/o incentives	-	-	-	-	-		$ -
68	w/incentives	-	-	-	-	-	$ -	
69	w/o incentives	-	-	-	-	-		$ -
70	w/incentives	-	-	-	-	-	$ -	
71	w/o incentives	-	-	-	-	-		$ -
72	w/incentives	-	-	-	-	-	$ -	
73	w/o incentives	-	-	-	-	-		$ -
74	w/incentives	-	-	-	-	-	$ -	
75	w/o incentives	-	-	-	-	-		$ -
76	w/incentives	-	-	-	-	-	$ -	
77	w/o incentives	-	-	-	-	-		$ -
78	w/incentives	-	-	-	-	-	$ -	
79	w/o incentives	-	-	-	-	-		$ -
80	w/incentives	-	-	-	-	-	$ -	
81	w/o incentives	-	-	-	-	-		$ -
82	w/incentives	-	-	-	-	-	$ -	
83	w/o incentives	-	-	-	-	-		$ -
84	w/incentives	-	-	-	-	-	$ -	
85	w/o incentives	-	-	-	-	-		$ -
86	w/incentives	-	-	-	-	-	$ -	
87	w/o incentives	-	-	-	-	-		$ -
88	w/incentives	-	-	-	-	-	$ -	
89	w/o incentives	-	-	-	-	-		$ -
90	w/incentives	-	-	-	-	-	$ -	

91	w/o incentives	-	-	-	-	-		$		-
92	w/incentives	-	-	-	-	-	$	-		
93	w/o incentives	-	-	-	-	-		$		-
94	w/incentives	-	-	-	-	-	$	-		
95	w/o incentives	-	-	-	-	-		$		-
96	w/incentives	-	-	-	-	-	$	-		
97	w/o incentives	-	-	-	-	-		$		-
98	w/incentives	-	-	-	-	-	$	-		
99	w/o incentives	-	-	-	-	-		$		-
100	w/incentives	-	-	-	-	-	$	-		
101	w/o incentives	-	-	-	-	-		$		-
102	w/incentives	-	-	-	-	-	$	-		
103	w/o incentives	....		....	.....	....				....
104	w/incentives	....	....	.....	.....	....		....		
							$	-	$	-

O-SPS Rate Template, Wksht R, Incentive Projects-cont 2, Table 43 Version: 0.1.0 Effective: 8/1/2010

Southwestern Public Service Company — Worksheet R
Worksheet R - Incentive Projects. — Table 43

III. Determine the Additional Revenue Requirement and Revenue Credit for facilities receiving incentives. (cont.)

B. Facilities receiving incentives accepted by FERC in Docket No.

The calculated Additional Revenue Requirement and Revenue Credit shown below are only valid for Investment Years matching Current Year. Values prior and subsequent to the Current Year will change as Attachment O is updated. These changes will not result in a refund or additional charge related to years prior to the Current Year.

Beginning Balance = Investment in first year and prior year Ending Balance, thereafter
Depreciation Expense = Straight line depreciation equal to Investment divided by Useful Life
Ending Balance = Beginning Balance - Depreciation Expense
Revenue Requirement = FCR * Beginning Balance plus Depreciation Expense, adjusted by Service Month divided by 12 in the first year
Additional Rev. Requirement = Revenue Requirement w/incentives less w/o incentive for the year
Additional Revenue Credit = Revenue Requirement w/o incentives

Line No.	Details			
105	Investment		Current Year	
106	Service Year (yyyy)		ROE increase accepted by FERC (Basis Points)	
107	Service Month (1-12)		FCR w/o incentives, less depreciation	0.00%
108	Useful life		FCR w/incentives approved for these facilities, less dep.	0.00%
109	CIAC (Yes or No)		Annual Depreciation Expense	-

110 / 111		Investment Year	Beginning Balance	Depreciation Expense	Ending Balance	Revenue Requirement	Additional Rev. Requirement	Additional Rev. Credit
112	w/o incentives	-	-	-	-	-	$ -	
113	w/incentives	-	-	-	-	-	$ -	
114	w/o incentives	-	-	-	-	-	$ -	
115	w/incentives	-	-	-	-	-	$ -	
116	w/o incentives	-	-	-	-	-	$ -	
117	w/incentives	-	-	-	-	-	$ -	
118	w/o incentives	-	-	-	-	-	$ -	
119	w/incentives	-	-	-	-	-	$ -	
120	w/o incentives	-	-	-	-	-	$ -	
121	w/incentives	-	-	-	-	-	$ -	
122	w/o incentives	-	-	-	-	-	$ -	
123	w/incentives	-	-	-	-	-	$ -	
124	w/o incentives	-	-	-	-	-	$ -	
125	w/incentives	-	-	-	-	-	$ -	
126	w/o incentives	-	-	-	-	-	$ -	
127	w/incentives	-	-	-	-	-	$ -	

128	w/o incentives	-	-	-	-	-	$	-
129	w/incentives	-	-	-	-	-	$	-
130	w/o incentives	-	-	-	-	-	$	-
131	w/incentives	-	-	-	-	-	$	-
132	w/o incentives	-	-	-	-	-	$	-
133	w/incentives	-	-	-	-	-	$	-
134	w/o incentives	-	-	-	-	-	$	-
135	w/incentives	-	-	-	-	-	$	-
136	w/o incentives	-	-	-	-	-	$	-
137	w/incentives	-	-	-	-	-	$	-
138	w/o incentives	-	-	-	-	-	$	-
139	w/incentives	-	-	-	-	-	$	-
140	w/o incentives	-	-	-	-	-	$	-
141	w/incentives	-	-	-	-	-	$	-
142	w/o incentives	-	-	-	-	-	$	-
143	w/incentives	-	-	-	-	-	$	-
144	w/o incentives	-	-	-	-	-	$	-
145	w/incentives	-	-	-	-	-	$	-
146	w/o incentives	-	-	-	-	-	$	-
147	w/incentives	-	-	-	-	-	$	-
148	w/o incentives	-	-	-	-	-	$	-
149	w/incentives	-	-	-	-	-	$	-
150	w/o incentives	-	-	-	-	-	$	-
151	w/incentives	-	-	-	-	-	$	-
152	w/o incentives	-	-	-	-	-	$	-
153	w/incentives	-	-	-	-	-	$	-
154	w/o incentives	-	-	-	-	-	$	-
155	w/incentives	-	-	-	-	-	$	-
156	w/o incentives	-	-	-	-	-	$	-
157	w/incentives	-	-	-	-	-	$	-
158	w/o incentives	-	-	-	-	-	$	-
159	w/incentives	-	-	-	-	-	$	-
160	w/o incentives	-	-	-	-	-	$	-
161	w/incentives	-	-	-	-	-	$	-
162	w/o incentives	-	-	-	-	-	$	-

163	w/incentives	-	-	-	-	-	$	-		
164	w/o incentives	-	-	-	-	-			$	-
165	w/incentives	-	-	-	-	-	$	-		
166	w/o incentives	-	-	-	-	-			$	-
167	w/incentives	-	-	-	-	-	$	-		
168	w/o incentives	-	-	-	-	-			$	-
169	w/incentives	-	-	-	-	-	$	-		
170	w/o incentives	-	-	-	-	-			$	-
171	w/incentives	-	-	-	-	-	$	-		
172	w/o incentives	-	-	-	-	-			$	-
173	w/incentives	-	-	-	-	-	$	-		
174	w/o incentives	....		....	.....	....			....	
175	w/incentives	....	....	.....	.....	....	....			
							$	-	$	-

O-SPS Rate Template, Wksht R, Incentive Projects-cont 3, Table 44 Version: 0.1.0 Effective: 8/1/2010

Southwestern Public Service Company
Worksheet R - Incentive Projects.

Worksheet R
Table 44

III. Determine the Additional Revenue Requirement and Revenue Credit for facilities receiving incentives. (cont.)

B. Facilities receiving incentives accepted by FERC in Docket No.

The calculated Additional Revenue Requirement and Revenue Credit shown below are only valid for Investment Years matching Current Year. Values prior and subsequent to the Current Year will change as Attachment O is updated. These changes will not result in a refund or additional charge related to years prior to the Current Year.

Beginning Balance = Investment in first year and prior year Ending Balance, thereafter
Depreciation Expense = Straight line depreciation equal to Investment divided by Useful Life
Ending Balance = Beginning Balance - Depreciation Expense
Revenue Requirement = FCR * Beginning Balance plus Depreciation Expense, adjusted by Service Month divided by 12 in the first year
Additional Rev. Requirement = Revenue Requirement w/incentives less w/o incentive for the year
Additional Revenue Credit = Revenue Requirement w/o incentives

Line No.	Details							
176	Investment			Current Year				0
177	Service Year (yyyy)			ROE increase accepted by FERC (Basis Points)				
178	Service Month (1-12)			FCR w/o incentives, less depreciation				0.00%
179	Useful life			FCR w/incentives approved for these facilities, less dep.				0.00%
180	CIAC (Yes or No)			Annual Depreciation Expense				-
181		Investment	Beginning	Depreciation	Ending	Revenue	Additional Rev.	Additional Rev.
182		Year	Balance	Expense	Balance	Requirement	Requirement	Credit
183	w/o incentives	-	-	-	-	-		$ -
184	w/incentives	-	-	-	-	-	$ --	
185	w/o incentives	-	-	-	-	-		$ -
186	w/incentives	-	-	-	-	-	$ --	
187	w/o incentives	-	-	-	-	-		$ -
188	w/incentives	-	-	-	-	-	$ --	
189	w/o incentives	-	-	-	-	-		$ -
190	w/incentives	-	-	-	-	-	$ --	
191	w/o incentives	-	-	-	-	-		$ -
192	w/incentives	-	-	-	-	-	$ --	
193	w/o incentives	-	-	-	-	-		$ -
194	w/incentives	-	-	-	-	-	$ --	
195	w/o incentives	-	-	-	-	-		$ -
196	w/incentives	-	-	-	-	-	$ --	
197	w/o incentives	-	-	-	-	-		$ -
198	w/incentives	-	-	-	-	-	$ --	
199	w/o incentives	-	-	-	-	-		$ -
200	w/incentives	-	-	-	-	-	$ --	
201	w/o incentives	-	-	-	-	-		$ -
202	w/incentives	-	-	-	-	-	$ --	
203	w/o incentives	-	-	-	-	-		$ -
204	w/incentives	-	-	-	-	-	$ --	
205	w/o incentives	-	-	-	-	-		$ -
206	w/incentives	-	-	-	-	-	$ --	
207	w/o incentives	-	-	-	-	-		$ -
208	w/incentives	-	-	-	-	-	$ --	
209	w/o incentives	-	-	-	-	-		$ -
210	w/incentives	-	-	-	-	-	$ --	
211	w/o incentives	-	-	-	-	-		$ -
212	w/incentives	-	-	-	-	-	$ --	
213	w/o incentives	-	-	-	-	-		$ -

214	w/incentives	-	-	-	-	-	$	--		
215	w/o incentives	-	-	-	-	-			$	-
216	w/incentives	-	-	-	-	-	$	--		
217	w/o incentives	-	-	-	-	-			$	-
218	w/incentives	-	-	-	-	-	$	--		
219	w/o incentives	-	-	-	-	-			$	-
220	w/incentives	-	-	-	-	-	$	--		
221	w/o incentives	-	-	-	-	-			$	-
222	w/incentives	-	-	-	-	-	$	--		
223	w/o incentives	-	-	-	-	-			$	-
224	w/incentives	-	-	-	-	-	$	--		
225	w/o incentives	-	-	-	-	-			$	-
226	w/incentives	-	-	-	-	-	$	--		
227	w/o incentives	-	-	-	-	-			$	-
228	w/incentives	-	-	-	-	-	$	--		
229	w/o incentives	-	-	-	-	-			$	-
230	w/incentives	-	-	-	-	-	$	--		
231	w/o incentives	-	-	-	-	-			$	-
232	w/incentives	-	-	-	-	-	$	--		
233	w/o incentives	-	-	-	-	-			$	-
234	w/incentives	-	-	-	-	-	$	--		
235	w/o incentives	-	-	-	-	-			$	-
236	w/incentives	-	-	-	-	-	$	--		
237	w/o incentives	-	-	-	-	-			$	-
238	w/incentives	-	-	-	-	-	$	--		
239	w/o incentives	-	-	-	-	-			$	-
240	w/incentives	-	-	-	-	-	$	--		
241	w/o incentives	-	-	-	-	-			$	-
242	w/incentives	-	-	-	-	-	$	--		
243	w/o incentives	-	-	-	-	-			$	-
244	w/incentives	-	-	-	-	-	$	--		
245	w/o incentives	....	....	....	.....	....				....
246	w/incentives	....	....	.....	.....	....		....		
							$	-	$	-

APPENDIX 1 to Attachment O – SPS

ANNUAL FORMULA RATE IMPLEMENTATION PROCEDURES
SOUTHWESTERN PUBLIC SERVICE COMPANY

Section 1 Applicability

The formula rate template and these Annual Formula Rate Implementation Procedures (collectively, the "*Formula Rate*") comprise SPS's filed transmission rate. SPS shall follow the Formula Rate to calculate annually its Zonal Annual Transmission Revenue Requirement ("*Zonal ATRR*"), the monthly rate for Network Integration Transmission Service ("*NITS Rate*"), the rates for point-to-point transmission service ("*PTP Rates*"), the monthly meter charge ("*Meter Charge*"), the monthly radial line charge ("*Radial Line Charge*"), the ATRR for Base Plan Upgrades ("*BPU ATRR*"), and the ATRR and rates for Ancillary Services Schedule 1 – Scheduling, System Control and Dispatch Service ("*Schedule 1 Rates*") provided in the SPS rate zone under the Southwest Power Pool ("*SPP*") and Xcel Energy Operating Companies ("*Xcel Energy*") Open Access Transmission Tariffs ("OATTs") (collectively, the "*Annual Update*"). Recovery of costs associated with existing facilities and new facilities shall be consistent with the Formula Rate and Attachment AI and Attachment J, respectively, of the SPP OATT. The Formula Rate and the charges produced thereunder shall be effective for service on and after January 1, 2009. The Formula Rate shall be applicable on and after January 1 of each calendar year for service from January 1 – December 31 of each calendar year (the "*Rate Year*"), subject to the review, challenge and true-up procedures of this Appendix 1.

Section 2 Annual Updates

a. No later than 5 p.m. CPT on October 1 of each year, SPS, or Xcel Energy Services Inc. ("*XES*") or another representative of Xcel Energy on SPS's behalf, shall determine and post its Annual Update to be effective during the next Rate Year. The Annual Update shall consist of the following:

(i) a data-populated version of the Formula Rate template setting forth the projected ATRR for the next Rate Year ("*Projected ATRR*") plus any applicable True-up Adjustment, as defined in Section 3.a., produced by operation of the Formula Rate;

(ii) a recalculation of the projected Base Plan Upgrade ("*BPU*") ATRR for the next Rate Year plus any applicable BPU True-up adjustment;

(iii) with respect to any True-up Adjustment or BPU True-up Adjustment calculated pursuant to Section 3, a calculation of applicable interest on any net over or under recovery based on the interest rates specified in the Commission's regulation at 18 C.F.R § 35.19a. The interest rate to be applied to the over or under recovery amounts shall be determined using the average rate for the twenty-one (21) months preceding October of the current year. The interest payable shall then be calculated by multiplying the average interest rate (monthly) by the over or under recovery amount by 24 months, the period during which the over or under recovery exists.

(iv) a recalculation of the Zonal ATRR, NITS Rate, PTP Rates, BPU ATRR, Meter Charge, Radial Line Charge, and the Schedule 1 Rates for the next Rate Year;

(v) supporting documentation, including, but not limited to, fully functioning Excel® files (or such other native format files), required to support, demonstrate and explain information upon which the Annual Update is based;

(vi) disclosure of the following changes to the extent any has taken effect since January 1, 2009, or since the prior October 1, and affects the Formula Rate or calculation of the Annual Update or the allocation of costs or revenues to SPS's transmission customers: changes in (a) FERC's Uniform System of Accounts ("*USoA*"), (b) FERC Form No. 1 reporting requirements as applicable, (c) any FERC ratemaking orders applicable to the SPS Formula Rate, (d) the accounting policies, practices or procedures of SPS, (e) the SPP and/or the Xcel OATTs as they relate to SPS, or (f) classification or reclassification of facilities from transmission to radial or from radial to transmission (inclusive of changes to the net book value of such facilities as a result of depreciation) (changes in items (a) through (f) collectively referred to as "*Material Changes*");

(vii) disclosure and documentation of the impact of any changes in the classification of "Transmission Facilities" as defined in Attachment AI of the SPP OATT that took effect since January 1, 2009, or in the most recent proceeding year, that impact the Formula Rate or Radial Line Charge(s) to any transmission customer(s);

(viii) a copy of that actuarial report(s) estimating SPS's Post-Employment Benefits Other Than Pensions expenses for the next Rate Year pursuant to Statement of Financial Accounting Standards No. 106, Employers' Accounting for Post-Employment Benefits Other Than Pensions ("*PBOP*"); and

(ix) information regarding wholesale gains on SPS's sale or transfer of a transmission asset.

b. SPS shall contemporaneously post and notify its transmission customers, other parties to FERC Docket No. ER08-313 as of the date the settlement is filed with the Commission and affected state regulatory commissions (collectively, "*Interested Parties*") of the availability of the Annual Update on the publicly-accessible portions of the SPS page of the SPP OASIS[1] and the Transmission page of the Xcel Energy Inc. Web Site [2] (collectively, the "*Web Sites*"). The posting shall include both a Portable Document Format and fully functioning Excel® file (or such other native format file) of all materials contained in the Annual Update.

[1] Currently http://www.oatioasis.com/SPS/index.html

[2] Currently http://www.xcelenergy.com/Texas/Company/Transmission/Pages/Open_Access_Transmission Tariff.aspx

c. If October 1 falls on a weekend or a holiday recognized by FERC, the Annual Update shall be posted by 5:00 p.m. CPT on the next business day.

d. Each year, no later than October 20, or the next business day if October 20 is not a business day, SPS shall convene a meeting among SPS and Interested Parties and their respective representatives ("*Customer Meeting*") to explain the Annual Update for the next Rate Year. This Customer Meeting shall (i) allow enough time for SPS to present details about its Annual Update; (ii) provide Interested Parties and their respective representatives the chance to seek information and clarifications from SPS about the Annual Update; and (iii) allow for participation via teleconference. Interested Parties shall be provided written notice at least fourteen (14) calendar days prior to the Customer Meeting. Written notice may be provided by email to the representative(s) of the Interested Party on record with SPS.

e. SPS shall modify the Annual Update to reflect any changes that it and the Interested Parties have agreed upon as of November 15, or the next business day if November 15 is not a business day, and on such date, provide SPS's Zonal ATRR and each Base Plan Upgrade's Revenue Requirement and description to the SPP for the purpose of SPP preparing any necessary tariff filing.[3] SPS shall also cause the revised Annual Update to be posted on the Web Sites no later than December 1. Contemporaneous with the posting of the revised Annual Update, SPS shall file the revised Annual Update with the Commission ("*Annual Informational Filing*"). If December 1 falls on a weekend or a holiday recognized by FERC, the Annual Informational Filing shall be posted no later than 4:00 p.m. CPT on the next business day. The Annual Informational Filing and posting will include both Portable Document Format and fully functioning Excel® file (or such other native format file) of all materials contained in the revised Annual Update. As soon as available, such posting shall also include the docket number assigned by the FERC to the Annual Informational Filing. The Annual Informational Filing shall not require Commission action.[4]

[3] In the event that the SPP is no longer required to make a tariff filing to reflect SPS's Zonal ATRR in the SPP OATT, and to the extent consistent with applicable Commission precedent, the November 15 deadline may be delayed or extended, as appropriate, until such later deadline established by the SPP that will facilitate timely billing of the new Zonal ATRR in the subsequent Rate Year.

[4] The transmittal letter accompanying the Annual Informational Filing shall inform the Commission that the Annual Informational Filing is not intended to be subject to the Commission's notice requirements, that it is not intended for the Commission to take action accepting the Annual Informational Filing, and shall inform the Commission regarding the procedures contained in these Implementation Procedures for review and challenge of the Annual Informational Filing. If the Commission issues a notice of or an order accepting the Annual Informational Filing, SPS or XES shall advise the Commission of the challenge process in these Implementation Procedures and shall work with the settling parties in Docket No. ER08-313-000, et al., to seek rescission of such action. No Commission action on the Annual Informational Filing shall affect any rights under the Formula Rate or these Implementation Procedures.

f. The Annual Update for the new Rate Year shall:

(i) be based upon SPS's most recent budget and other information for the new Rate Year, that reasonably projects costs properly recorded (or to be recorded) on the books and records of SPS consistent with the Commission's USoA, FERC's orders establishing generally applicable

transmission ratemaking policies, FERC accounting policies and practices, SPP's policies, and the SPP and Xcel Energy OATTs; effective January 1, 2015, PBOP charges will be based on the PBOP expense amount reported in SPS's most recent annual actuarial valuation report as of the date of SPS's Annual Update; and

(ii) compute the Projected ATRR using a rate base reflecting the following:

(1) an average of 13 monthly balances shall be applied to (i) gross plant balance for all plant functions, (ii) accumulated depreciation and amortization balance for all plant functions, (iii) the gross plant balance associated with the generator step-ups, (iv) capital structure balances (that is, long-term debt, preferred stock, and common equity), and (v) Construction Work in Progress ("*CWIP*") balance (if/when CWIP recovery is approved by the Commission);

(2) an average of the beginning of year and end of year balances shall be
applied to (i) accumulated deferred income tax balances, (ii) unamortized balance of abandoned incentive plant (if/when abandoned incentive plant recovery is approved by the Commission), (iii) unamortized balance of extraordinary property loss (if/when recovery is approved by the Commission), (iv) land held for future use plant balance, (v) materials and supplies, and (vi) prepayments;

(3) Cash Working Capital shall be calculated (the value will be set to zero until an alternative recovery mechanism is approved by the Commission);

(4) the most recent end of the year actual plant balances shall be used in the calculation of the Radial Line Charges and the Meter Charges; and

(5) for each Base Plan Upgrade project, the revenue requirement credit shall be based on the projected investment amount, the projected in-service date and the projected Fixed Charge Rate ("*FCR*").

Section 3 True-up Adjustment

The True-up Adjustment component of the Zonal ATRR for each Rate Year, beginning with 2011, shall be determined as follows:

a. Beginning with 2010, no later than 5 p.m. CPT on June 15 of each year, SPS or XES or another representative of Xcel Energy on SPS's behalf, shall calculate and post the ATRR for the previous Rate Year based on its actual costs as reflected in its FERC Form No. 1 and its books and records for that Rate Year ("*Actual ATRR*"). The Actual ATRR shall be compared with the Projected ATRR for the same year ("*True-up Year*") to determine any excess or shortfall in the projected Zonal ATRR that was used for billing purposes in the True-up Year. In addition, actual divisor loads shall be compared to projected divisor loads and the difference multiplied by

the zonal rate actually billed to determine any excess or shortfall in collection due to volume. The sum of the excess or shortfall due to the actual versus projected Zonal ATRR and the excess or shortfall due to volume shall constitute the ("*True-up Adjustment*"). The True-up Adjustment shall have the following support:

(i) a data-populated version of the Formula Rate template setting forth the Actual ATRR for the True-up Year;

(ii) a determination of the difference between the Projected ATRR and the Actual ATRR for such True-up Year, as set forth in Section 3.a. herein, shall be provided in Worksheet A included in the data populated version of the Formula Rate as described in item (i);

(iii) a determination of the difference between the Projected BPU ATRR and the Actual BPU ATRR for such True-up Year shall be provided in Worksheet A that is included in the data populated version of the formula;

(iv) supporting documentation required hereunder, including, but not limited to, fully functioning Excel® files (or such other native format files), which demonstrate or explain information not otherwise set out in SPS's FERC Form No. 1;

(v) disclosure of any Material Changes on the calculation of the True-up Adjustment to the extent that such Material Changes have taken effect since January 1, 2009, or since the prior October 1, and those Material Changes affect the Formula Rate or calculation of the True-up Adjustment or the allocation of costs or revenues to SPS's transmission customers; and

(vi) example True-up Adjustments for the 2009 and 2012 net revenue requirements (using illustrative numbers) have been provided as Exhibit A attached hereto.

b. By no later than June 15, SPS shall contemporaneously post the True-up Adjustment on the Web Sites and SPS shall file a letter with the Commission ("*True-up Filing*") announcing the availability of the True-up Adjustment on the Web Sites (i.e., it will not file the entirety of the True-up Adjustment). If June 15 falls on a weekend or a holiday recognized by FERC, the True-up Filing shall be filed and posted no later than 4:00 p.m. CPT on the next business day. The True-up Adjustment posting shall include both a Portable Document Format and fully functioning Excel® file (or such other native format file) of all materials contained in the True-up Adjustment. SPS shall notify the Interested Parties of the availability of the True-up Filing and posting. The True-up Filing shall not require Commission action.

c. Each year, no later than July 15, SPS shall convene a meeting among SPS and other Interested Parties and their respective representatives ("*True-up Customer Meeting*"). This True-up Customer Meeting shall (i) allow enough time for SPS to present details about its True-up Adjustment; (ii) provide Interested Parties and their respective representatives the chance to seek information and clarifications from SPS about the True-up Adjustment; and (iii) allow for participation via teleconference. SPS shall post and Interested Parties shall be provided written

notice at least fourteen (14) calendar days prior to the True-up Customer Meeting. Written notice may be provided by email to the representative(s) of the Interested Party on record with SPS.

d. The True-up Adjustment shall:

(i) be based on costs that are prudently incurred and properly recorded on the books and records of SPS, including SPS's FERC Form No. 1 data, as applicable, for the most recently completed calendar year consistent with the USoA, FERC's orders establishing generally applicable transmission ratemaking policies, and, to the extent specified in the Formula Rate, SPS's books and records kept in conformance with the FERC USoA, FERC accounting policies and practices, SPP's policies, and the SPP and Xcel Energy OATTs;

(ii) compute the Actual ATRR using the same methodology for calculating rate base and capital structure balances as specified for the Annual Update in Section 2(f)(ii) above;

(iii) compute the Actual BPU ATRR using the actual Base Plan Upgrade project investment amount(s), the actual in-service date(s), and the actual FCR; and

(iv) include a side-by-side comparison of the actual ATRR formula rate components as compared with the projected ATRR formula rate components for the True-up Year ("*Variance Analyses*").

e. Summary of Formula Rate Process including True-up Adjustment:

(i) Monthly charges shall be based on the Zonal ATRR that uses projected data for each Rate Year. For example, those charges for service from January 1, 2009 through December 31, 2009 shall be based on projected 2009 plant-in-service costs. Beginning January 1, 2012, the monthly charges shall be based on the Zonal ATRR using projected data that includes projected data for the BPU ATRR.

(ii) The Zonal ATRR based on projected 2009 data shall be trued-up in June 2010 to a Zonal ATRR based on actual data. Beginning with the 2012 Rate Year, the Zonal ATRR and the BPU ATRR based on projected data shall be trued-up in June 2013 to a Zonal ATRR and BPU ATRR based on actual data.

(iii) Differences between the Zonal ATRR and the BPU ATRR calculated using projected and actual data for a given True-up Year that result from the True-up Adjustment process shall be rolled forward to the following projected Rate Year, including interest. For example, the True-up Adjustment for the 2012 Formula Rates would be calculated in June 2013 and included in the rate formula effective January 1, 2014.

(iv) The sequence outlined in subsections (i), (ii) and (iii), above, shall repeat each subsequent Rate Year and is summarized below:

Month	Year	Action
Oct.	2009	Annual Update - SPS populates the formula with Year 2010 projected data. Formula template amounts for 2010 actual data are left blank at this time.
June	2010	True-up Adjustment - SPS populates the Year 2009 projected data formula with Year 2009 actual data and calculates the 2009 True-up Adjustment (before interest).
Oct.	2010	Annual Update - SPS calculates the interest to include in the 2009 True-up Adjustment.
Oct.	2010	Annual Update - SPS populates the formula with Year 2011 projected data and includes the 2009 True-up Adjustment amount into the Zonal ATRR for 2011. Formula template amounts for 2011 actual data are left blank at this time.
June	2011	True-up Adjustment - SPS populates the Year 2010 projected data formula with Year 2010 actual data and calculates the 2010 True-up Adjustment (before interest).
Oct.	2011	Annual Update - SPS calculates the interest to include in the 2010 True-up Adjustment.
Oct.	2011	Annual Update - SPS populates the formula with Year 2012 projected data including projected data for the BPU ATRR and inputs the 2010 True-up Adjustment amount into the Zonal ATRR for 2012. Formula template amounts for 2012 actual data are left blank at this time.
June	2012	True-up Adjustment - SPS populates the formula with 2011 actual data and calculates the 2011 True-up

		Adjustment (before interest).
Oct.	2012	Annual Update - SPS calculates the interest to include in the 2011 True-up Adjustment.
Oct.	2012	Annual Update – SPS populates the formula with Year 2013 projected data including projected data for the BPU ATRR and inputs the 2011 True-up Adjustment amount into the Zonal ATRR for Year 2013. Formula template amounts for 2013 actual data are left blank at this time.
June	2013	True-up Adjustment – SPS populates the formula with 2012 actual data including the actual BPU ATRR and calculates the 2012 Zonal ATRR and BPU ATRR True-up adjustments (before interest).
Oct.	2013	Annual Update – SPS calculates the interest to include in the 2012 True-up Adjustment.
Oct.	2013	Annual Update – SPS populates the formula with Year 2014 projected data including projected data for the BPU ATRR and inputs the 2012 Zonal ATRR and the 2012 BPU ATRR True-up Adjustment amounts into the Zonal ATRR and BPU ATRR for 2014. Formula template amounts for 2014 actual data are left blank at this time.
June	(Year)	True-up Adjustment - SPS populates the formula with (Year - 1) actual data and calculates the (Year – 1)True-up Adjustment (before interest).
Oct	(Year)	Annual Update – SPS calculates the interest to include in the (Year – 1) True-up Adjustment.

Annual Update – SPS populates the formula with (Year + 1) projected data and (Year – 1) True-up Adjustment

f. The True-up Adjustment is subject to challenge and review in accordance with the procedures set forth in this Appendix 1, and all other rights that any entity may have under the Federal Power Act ("*FPA*") or the Commission's regulations.

Section 4 Annual Review Procedures

Each Annual Update and True-up Adjustment shall be subject to the following review procedures ("*Annual Review Procedures*"):

a. Beginning June 15, but no later than November 30 of each year, any Interested Party and any entity that has standing to challenge SPS formula rates under the FPA may serve reasonable information requests in writing on SPS concerning the True-up Adjustment and/or the Annual Update for the next calendar year ("*Information Requests*"). The deadline may be extended by mutual consent.

b. Information Requests submitted according to Section 4.a., above, shall be limited to what is appropriate to determine whether the Formula Rate (inclusive of any corrections) has been applied accurately, appropriately, and in accordance with its terms. Permissible Information Requests include, but are not limited to, Information Requests regarding Material Changes and Information Requests related to whether costs have been prudently incurred and whether costs have been properly recorded, on the books and records of SPS, including SPS's FERC Form No. 1, as applicable, consistent with the USoA, FERC's orders establishing generally applicable transmission ratemaking policies, FERC accounting policies and practices, SPP's policies, and the SPP and Xcel Energy OATTs. Such Information Requests shall not solicit information concerning costs or allocations where those specific costs or allocations have been addressed by any final FERC order or by any final settlement approved by the appropriate authority, court or agency, except to determine if the costs or allocations have been accurately and appropriately implemented in accordance with the terms of the order and/or settlement or to determine if different circumstances might affect such prior actions. Interested Parties should make good faith efforts to submit consolidated sets of Information Requests that limit the number and overlap of questions to the maximum extent practicable.

c. SPS shall make a good faith effort to respond to Information Requests pertaining to the Annual Update or True-up Adjustment within fourteen (14) calendar days after receipt of such Information Requests. Information requests received after 4 p.m. CPT shall be considered received the next business day.

Section 5 Resolution of Issues and Challenges to Annual Update and/or True-Up Adjustments

a. No later than December 5 of each year, any Interested Party may notify SPS in writing of any specific challenge(s) to any component of the most recently posted

True-up Adjustment and/or Annual Update ("*Preliminary Challenge*"). Within five (5) business days of receiving notice of such challenge(s), SPS shall provide written notice to all Interested Parties of such challenge(s) and post notice of such challenge(s) on the Web Sites. SPS and the Interested Party shall make good faith efforts to resolve the Preliminary Challenge through negotiations, and shall allow any Interested Party to participate in such negotiations. Any modification to the True-up Adjustment or the Annual Update that results from such negotiations and that is agreed upon no later than November 15 shall be incorporated into the Annual Update and True-up Adjustment for the next Rate Year and incorporated into the Company's Annual Informational Filing. However, to the extent such negotiations lead to agreed-upon changes to the Formula Rate, such changes shall be filed with the Commission and such changes to the Formula Rate shall have an effective date of January 1 of the Rate Year under review subject to Commission approval.

b. SPS shall provide and post a written response within fourteen (14) calendar days of receiving a Preliminary Challenge. Its written response shall notify all Interested Parties of the extent to which SPS agrees or disagrees with the position raised by the Interested Party(ies), and what, if any, modifications to the Annual Update or True-up Adjustment will result. If SPS disagrees with the issue(s) raised in the Preliminary Challenge, it shall provide supporting documentation with its response.

c. All information and correspondence produced pursuant to these Implementation Procedures may be included in any Formal Challenge, in any other proceeding concerning the Formula Rate initiated at FERC pursuant to the FPA, or in any proceeding before the U.S. Court of Appeals to review a FERC decision related to the Formula Rate. SPS may, however, designate any response to an Information Request as confidential if the information conveyed is not publicly available. Interested Parties' representatives shall treat such response as non-public information provided in confidence. Interested Parties may use responses designated as confidential in connection with any informal dispute resolution process commenced pursuant to Section 5.a. herein, any Formal Challenge brought pursuant to Section 5.e. herein, or in conjunction with a protest to a proposed change to the formula rate initiated by SPS through a separate FPA Section 205 filing; provided, however, when so used, such response shall initially be filed under seal (unless the claim of confidentiality is waived by SPS), subject to a later determination by the presiding authority that the material is, in whole or in part, not entitled to confidential treatment.

d. If SPS and the Interested Parties have not resolved all identified issues within thirty (30) calendar days after receipt of SPS's response to the issue(s), senior management representatives of SPS and the Interested Parties shall meet to try to resolve the issue(s).

e. If these senior management representatives are not able to resolve the issue(s) within sixty (60) calendar days, any Interested Party that has not resolved any Preliminary Challenge to a True-up Adjustment may file with FERC a Formal Challenge to a True-up Adjustment pursuant to these Implementation Procedures ("*Formal Challenge*").

(i) Failure to notify SPS of an issue shall not bar pursuit of such issue in the filing of a Formal Challenge.

(ii) Failure to notify SPS of an issue shall not bar pursuit of such issue in a subsequent Annual Update or True-up Adjustment review.

(iii) Failure to file a Formal Challenge regarding an issue(s) as to a given Annual Update or True-up Adjustment shall not bar pursuit of such issue(s) or the filing of a Formal Challenge as to such issue(s) as relates to a subsequent Annual Update or True-up Adjustment review.

f. In any proceeding ordered by the FERC in response to a Formal Challenge raised under these Implementation Procedures, SPS shall bear the burden of demonstrating the justness and reasonableness of the charges resulting from its application of the Formula Rate, and of proving that it properly applied the Formula Rate, properly calculated the challenged Annual Update or True-up Adjustment pursuant to the Formula Rate, and that adoption of any Material Change is just and reasonable. Nothing herein is intended to alter the burden applied by FERC with respect to prudence challenges.

g. Any changes to the data inputs resulting from Preliminary Challenges or Formal Challenges that are not agreed to or resolved by a final Commission Order on or before November 15 shall be incorporated into the Formula Rate and True-up Adjustment for the next Rate Year that begins after the negotiations have become final.

h. It is recognized that resolution of Preliminary Challenges and/or Formal Challenges related to Material Changes may necessitate pro forma adjustments to the Formula Rate calculations, changes to the Formula Rate, or changes to the input data to restore the intent of the formula as of the effective date of the settlement or as the Formula Rate may be subsequently modified by FERC or through settlement, and to ensure that the Formula Rate continues to operate in a manner that is just, reasonable, and not unduly discriminatory or preferential. It is further recognized that the impact of any such pro forma adjustment or changes to the Formula Rate calculation, the Formula Rate, or input data may be applicable to the entire Rate Year at issue in a Preliminary Challenge or Formal Challenge. If such pro forma adjustment occurs mid-year, it shall be effective mid-year, however, the charges produced by the Formula Rate shall not be adjusted mid-year but rather the impact on the charges from the pro forma adjustment shall be reflected in the True-up Adjustment. If such a change in the Formula Rate is agreed to by the settling parties in Docket No. ER08-313-000 et al. or required by FERC, SPS shall file such Formula Rate change under FPA Section 205, with requests for waiver of applicable notice requirements, to permit the change to become effective for the Annual Update or True-up Adjustment for the Rate Year under review, which requests for waiver of the applicable notice requirements shall not be opposed by any settling party in Docket No. ER08-313-000, et al.

i. Except as provided in Section 5.h, no party shall, in conjunction with the Annual Update or True-up Adjustment, seek to modify the Formula Rate (i.e., all modifications to the Formula Rate shall require an FPA filing).

Section 6 Challenges to the Formula

a. Nothing in these Annual Formula Rate Implementation Procedures shall be deemed to limit in any way the right of any party to file a request for prospective relief under FPA Sections 205, 206 or 306 and FERC's regulations to change the Formula Rate. Any party may challenge the continuing reasonableness of the Formula Rate or the charges produced thereby.

b. Neither failure to notify SPS of an issue nor failure to file a Formal Challenge nor failure to exercise any rights under FPA Sections 205, 206, and 306 and FERC's regulations in any given year shall be construed as a bar to raising any issue in any proceeding initiated at FERC.

Section 7 <u>Corrections to FERC Form No. 1, Annual Update, or True-up Adjustment</u>

a. Notwithstanding any other provision of these Implementation Procedures, (i) if SPS identifies, determines or concludes that corrections to any prior year's FERC Form No. 1 or Annual Update or True-up Adjustment pursuant to the Formula Rate are required to correct an error, or (ii) at any time an Interested Party presents information or raises a concern to SPS that indicates that an error exists or a correction is required to any prior year's FERC Form No. 1 or Annual Update or True-up Adjustment, SPS shall investigate the alleged error(s) and within 30 days shall inform Interested Parties of the results of the investigation by posting such results on its Web Sites as set forth in Section 2.b. The results of the investigation shall include an explanation of the nature of the alleged error(s) and the extent to which SPS agrees or disagrees that such error(s) require corrections to the FERC Form No. 1, Annual Update or True-up Adjustment.

b. If a correction to an Annual Update or True-up Adjustment results from the error, no mid-year adjustment will result, but an adjustment will be made in a future period as follows.

SPS shall promptly correct such error(s) identified in Section 7.a., and shall notify Interested Parties of such correction(s) by posting an appropriate amended Annual Update or True-up Adjustment on the Web Sites as set forth in Section 2.b. If a correction to the Annual Update or True-up Adjustment is identified before November 15 (i.e., before the commencement of the next Rate Year), the modified charges produced by the Formula Rate shall be reflected in the next Rate Year. Otherwise, the correction shall be reflected in the next True-up Adjustment, and credited in the following Rate Year.

c. In any Rate Year in which an out-of-period correction is reflected, SPS shall also include worksheets to describe such adjustments, including interest on the total correction for the entire period in which the error existed through and including the Rate Year in which the correction is reflected in the Annual Update. The applicable interest rate shall be the FERC-published interest rates.

d. In the event SPS corrects or fails to correct an Annual Update or True-up Adjustment pursuant to this Section 7, Interested Parties shall have the same rights to review and submit challenges to the correction(s) or SPS's failure to make a correction as those parties otherwise would have had pursuant to these Annual Formula Rate Implementation Procedures, without abridgement or restriction, if the

Form No. 1, Annual Update, or True-up Adjustment had been correctly stated in the first instance; provided, however, the scope of review of the Section 7 correction, the formula line item reflecting the Section 7 correction, and the worksheets calculating the Section 7 correction is limited to the aspects of the Formula Rate, Annual Update and/or True-up Adjustment affected by the out-of-period correction(s).

Section 8 Changes to Formula Rate Initiated by SPS

a. Any changes to the Formula Rate initiated by SPS, including any changes necessitated by Material Changes, may only be implemented as a result of a filing with FERC under Section 205 or 206 of the FPA.

b. However, in the event that FERC mandates any changes in the format for the FERC Form No. 1 or the USoA, SPS may make a filing with FERC under FPA Section 205 that updates the FERC Form No. 1 and USoA references in its Formula Rate to reflect any such changes prior to or coincident with the Annual Update or True-up Adjustment where these changes are reflected in the Formula Rate. Such filing may not be used to raise issues unrelated to the proposed changes. If such a change in the Formula Rate is required pursuant to this Section 8.b., the FPA Section 205 filing may include a request for waiver of applicable notice requirements, to permit the change to become effective for the Annual Update or True-up Adjustment for the applicable Rate Year, which requests for waiver of notice requirements shall not be opposed by any settling party in Docket No. ER08-313-000, et al.

Section 9 Changes to the Stated Inputs in the Formula Rate

a. The following Formula Rate inputs shall be stated values to be used in the Formula Rate (both for the Annual Update and True-up Adjustment) until changed by a filing pursuant to Section 205 of the FPA or by a proceeding under Section 206 of the FPA: (a) the rate of return on common equity ("*ROE*"); and (b) depreciation rates or amortization periods. With respect to the PBOP charges, the amount shall be based on an Actuarial Study and is net of any amounts received from the Federal government for the prescription drug subsidy ("Medicare D Subsidy"). The amount SPS will contribute to its external PBOP trust will be at a minimum equal to its actual PBOP expense.

Effective on and after October 20, 2014: with respect to a filing under FPA Section 205 to change the transmission formula ROE established in the comprehensive Settlement Agreement in Docket No. EL05-19-000 et al. ("*Settlement Agreement*"), SPS will not submit a filing prior to October 31, 2019 seeking to increase the fixed settlement ROE of 10.5 percent (which includes the SPP RTO membership adder), and will not request an effective date earlier than January 1, 2020; with respect to a filing under FPA Section 206 to change the fixed settlement ROE of 10.5 percent, no Settling Party to the Settlement Agreement will file or support an FPA Section 206 filing to reduce the fixed settlement ROE prior to October 31, 2019, and no Settling Party will request a refund effective date earlier than January 1, 2020 ("*Limited ROE Moratorium*").

b. For extraordinary property losses, the unamortized balance shall be included in rate base and shall be amortized for Formula Rate purposes only after FERC has authorized the amount of the loss and the amortization of the loss for ratemaking purposes.

c. For abandoned plant, the unamortized balance shall be included in rate base and shall be amortized for Formula Rate purposes only after FERC has authorized the amount of any abandoned plant and the amortization of the balance for ratemaking purposes.

EXHIBIT A

EXAMPLE OF 2009 TRUE-UP ADJUSTMENT:

Projected 2009 net ATRR was $90,000,000, projected load was 4,500,000 kw and the resulting zonal rate was $20.00 per kw-yr.

Actual 2009 net ATRR calculated based on FERC Form No. 1 data available in May, 2010 is $88,000,000, actual 12 CP load is 4,512,820 kw for a resulting zonal rate of $19.50 per kw-yr.

2009 TRUE-UP ADJUSTMENT CALCULATION:
There is an over recovery of the net revenue requirement equal to $2,000,000 ($90,000,000 – $88,000,000 = $2,000,000).

There is also a $256,400 over recovery in revenue collection due to volume ((4,500,000kw – 4,512,820kw) X $20 per kw-yr = $256,400).

In this example, the total True-up Adjustment amount would be a net over recovery of $2,256,400 ($2,000,000 + $256,400 = $2,256,400), which would be applied as a reduction to the 2011 projected net ATRR beginning in January 2011.

This same amount can also be calculated by taking the difference between the 2009 projected zonal rate and the zonal rate calculated based on actual data times the actual load (($20.00 – $19.50) per kw-yr X 4,512,820 kw = $2,256,400). (Allow for rounding.)

EXAMPLE OF 2012 TRUE-UP ADJUSTMENT:

Projected 2012 Zonal ATRR = $118M Actual 2012 Zonal ATRR = $120M
Projected 2012 BPU ATRR = $10M Actual 2012 BPU ATRR = $9M
Projected Load = 5,400,000 kW Actual Load = 5,200,000 kW
Projected Zonal Rate = $20.00 per kW-yr. (($118M - $10M) / 5,400,000 kW)
Actual Zonal Rate = $21.35 per kW-yr. (($120M - $9M) / 5,200,000 kW)

2012 TRUE-UP ADJUSTMENT CALCULATION:
Zonal ATRR under recovery of $2M. ($120M - $118M)

Zonal ATRR under recovery of $1M from the BPU ARR. ($9M - $10M. The projected BPU ATRR revenue credit reducing the Zonal ATRR was $1M higher than the actual BPU ATRR.)

Zonal ATRR under recovery of $4M due to the volume variance, projected load as compared to actual load. ((5,200,000 kW – 5,400,000 kw) x $20.00 per kW = $4M.)

In this example, the total Zonal ATRR True-up would be a net under recovery of $7M. [5] ($2M + $1M + $4M)

[5] The BPU ATRR amount is revenue credited to the Zonal ATRR. Because the projected BPU ARR was $1M higher than the actual BPU ATRR, the projected Zonal ATRR was $1M lower than it should have been. In the next annual update, the projected BPU revenue credit will be reduced by $1M from the BPU ATRR true-up. This results in a smaller BPU revenue credit and a larger projected Zonal ATRR.

This same amount can also be calculated by taking the difference between the 2012 actual zonal rate and the projected zonal rate times the actual load. (($21.35 per kW - $20.00 per kW) x 5,200,000 kW = $7M.) (Allow for rounding.)

ATTACHMENT P

Standard Small Generator Interconnection Procedures (SGIP)

Applicable to Generating Facilities that are less than 20 MWs connecting to the Transmission System

of

Public Service Company of Colorado

TABLE OF CONTENTS

Section 1. Application
- 1.1 Applicability
- 1.2 Pre-Application
- 1.3 Interconnection Request
- 1.4 Modification of the Interconnection Request
- 1.5 Site Control
- 1.6 Queue Position
  - 1.6.1 Clustering of Requests for a Resource Solicitation
- 1.7 Interconnection Requests Submitted Prior to the Effective Date of the SGIP

Section 2. Fast Track Process
- 2.1 Applicability
- 2.2 Initial Review
  - 2.2.1 Screens
- 2.3 Customer Options Meeting
- 2.4 Supplemental Review

Section 3. Study Process
- 3.1 Applicability
- 3.2 Scoping Meeting
- 3.3 Feasibility Study
- 3.4 System Impact Study
- 3.5 Facilities Study

Section 4. Provisions that Apply to All Interconnection Requests
- 4.1 Reasonable Efforts
- 4.2 Disputes
- 4.3 Interconnection Metering
- 4.4 Commissioning
- 4.5 Confidentiality
- 4.6 Comparability
- 4.7 Record Retention
- 4.8 Interconnection Agreement
- 4.9 Coordination with Affected Systems
- 4.10 Capacity of the Small Generating Facility

Attachment 1 - Glossary of Terms
Attachment 2 - Small Generator Interconnection Request
Attachment 3 - Certification Codes and Standards
Attachment 4 - Certification of Small Generator Equipment Packages
Attachment 5 - Application, Procedures, and Terms and Conditions for Interconnecting a Certified Inverter-Based Small Generating Facility No Larger than 10 kW ("10 kW Inverter Process")
Attachment 6 - Feasibility Study Agreement
Attachment 7 - System Impact Study Agreement
Attachment 8 - Facilities Study Agreement

Appendix 1 –Small Generator Interconnection Agreement (For Generating Facilities No Larger Than 20 MW)

Section 1. Application

1.1 Applicability

1.1.1 A request to interconnect a certified Small Generating Facility (See Attachments 3 and 4 for description of certification criteria) to the Transmission Provider's Distribution System shall be evaluated under the section 2 Fast Track Process if the eligibility requirements of section 2.1 are met. A request to interconnect a certified inverter-based Small Generating Facility no larger than 10 kilowatts (kW) shall be evaluated under the Attachment 5 10 kW Inverter Process. A request to interconnect a Small Generating Facility no larger than 20 megawatts (MW) that does not meet the eligibility requirements of section 2.1, or does not pass the Fast Track Process or the 10 kW Inverter Process, shall be evaluated under the section 3 Study Process. If the Interconnection Customer wishes to interconnect its Small Generating Facility using Network Resource Interconnection Service, it must do so under the Standard Large Generator Interconnection Procedures and execute the Standard Large Generator Interconnection Agreement.

1.1.2 Capitalized terms used herein shall have the meanings specified in the Glossary of Terms in Attachment 1 or the body of these procedures.

1.1.3 Neither these procedures nor the requirements included hereunder apply to Small Generating Facilities interconnected or approved for interconnection prior to 60 Business Days after the effective date of these procedures.

1.1.4 Prior to submitting its Interconnection Request (Attachment 2), the Interconnection Customer may ask the Transmission Provider's interconnection contact employee or office whether the proposed interconnection is subject to these procedures. The Transmission Provider shall respond within 15 Business Days.

1.1.5 Infrastructure security of electric system equipment and operations and control hardware and software is essential to ensure day-to-day reliability and operational security. The Federal Energy Regulatory Commission expects all Transmission Providers, market participants, and Interconnection Customers interconnected with electric systems to comply with the recommendations offered by the President's Critical Infrastructure Protection Board and best practice recommendations from the electric reliability authority. All public utilities are expected to meet basic standards for electric system infrastructure and operational security, including physical, operational, and cyber-security practices.

1.1.6 References in these procedures to interconnection agreement are to the Small Generator Interconnection Agreement (SGIA).

1.2 Pre-Application

1.2.1 The Transmission Provider shall designate an employee or office from which information on the application process and on an Affected System can be obtained through informal requests from the Interconnection Customer presenting a proposed project for a specific site. The name, telephone number, and e-mail address of such contact employee or office shall be made available on the Transmission Provider's Internet web site. Electric system information provided to

the Interconnection Customer should include relevant system studies, interconnection studies, and other materials useful to an understanding of an interconnection at a particular point on the Transmission Provider's Transmission System, to the extent such provision does not violate confidentiality provisions of prior agreements or critical infrastructure requirements. The Transmission Provider shall comply with reasonable requests for such information.

1.2.2 In addition to the information described in section 1.2.1, which may be provided in response to an informal request, an Interconnection Customer may submit a formal written request form along with a non-refundable fee of $300 for a pre-application report on a proposed project at a specific site. The Transmission Provider shall provide the pre-application data described in section 1.2.3 to the Interconnection Customer within 20 Business Days of receipt of the completed request form and payment of the $300 fee. The pre-application report produced by the Transmission Provider is non-binding, does not confer any rights, and the Interconnection Customer must still successfully apply to interconnect to the Transmission Provider's system. The written pre-application report request form shall include the information in sections 1.2.2.1 through 1.2.2.8 below to clearly and sufficiently identify the location of the proposed Point of Interconnection.

1.2.2.1 Project contact information, including name, address, phone number, and email address.

1.2.2.2 Project location (street address with nearby cross streets and town)

1.2.2.3 Meter number, pole number, or other equivalent information identifying proposed Point of Interconnection, if available.

1.2.2.4 Generator Type (e.g., solar, wind, combined heat and power, etc.)

1.2.2.5 Size (alternating current kW)

1.2.2.6 Single or three phase generator configuration

1.2.2.7 Stand-alone generator (no onsite load, not including station service – Yes or No?)

1.2.2.8 Is new service requested? Yes or No? If there is existing service, include the customer account number, site minimum and maximum current or proposed electric loads in kW (if available) and specify if the load is expected to change.

1.2.3. Using the information provided in the pre-application report request form in section 1.2.2, the Transmission Provider will identify the substation/area bus, bank or circuit likely to serve the proposed Point of Interconnection. This selection by the Transmission Provider does not necessarily indicate, after application of the screens and/or study, that this would be the circuit the project ultimately connects to. The Interconnection Customer must request additional pre-application reports if information about multiple Points of Interconnection is requested. Subject to section 1.2.4, the pre-application report will include the following information:

1.2.3.1 Total capacity (in MW) of substation/area bus, bank or circuit based on normal or operating ratings likely to serve the proposed Point of Interconnection.

1.2.3.2 Existing aggregate generation capacity (in MW) interconnected to a substation/area bus, bank or circuit (i.e., amount of generation online) likely to serve the proposed Point of Interconnection.

1.2.3.3 Aggregate queued generation capacity (in MW) for a substation/area bus, bank or circuit (i.e., amount of generation in the queue) likely to serve the proposed Point of Interconnection.

1.2.3.4 Available capacity (in MW) of substation/area bus or bank and circuit likely to serve the proposed Point of Interconnection (i.e., total capacity less the sum of existing aggregate generation capacity and aggregate queued generation capacity).

1.2.3.5 Substation nominal distribution voltage and/or transmission nominal voltage if applicable.

1.2.3.6 Nominal distribution circuit voltage at the proposed Point of Interconnection.

1.2.3.7 Approximate circuit distance between the proposed Point of Interconnection and the substation.

1.2.3.8 Relevant line section(s) actual or estimated peak load and minimum load data, including daytime minimum load as described in section 2.4.4.1.1 below and absolute minimum load, when available.

1.2.3.9 Number and rating of protective devices and number and type (standard, bi-directional) of voltage regulating devices between the proposed Point of Interconnection and the substation/area. Identify whether the substation has a load tap changer.

1.2.3.10 Number of phases available at the proposed Point of Interconnection. If a single phase, distance from the three-phase circuit.

1.2.3.11 Limiting conductor ratings from the proposed Point of Interconnection to the distribution substation.

1.2.3.12 Whether the Point of Interconnection is located on a spot network, grid network, or radial supply.

1.2.3.13 Based on the proposed Point of Interconnection, existing or known constraints such as, but not limited to, electrical dependencies at that location, short circuit interrupting capacity issues, power quality or stability issues on the circuit, capacity constraints, or secondary networks.

1.2.4 The pre-application report need only include existing data. A pre-application report request does not obligate the Transmission Provider to conduct a study or other analysis of the proposed generator in the event that data is not readily available. If the Transmission Provider cannot complete all or some of a pre-application report due to lack of available data, the Transmission Provider shall provide the Interconnection Customer with a pre-application report that includes the data that is available. The provision of information on "available capacity" pursuant to section 1.2.3.4 does not imply that an interconnection up to this level may be completed without impacts since there are many variables studied as part of the interconnection review process, and data provided in the pre-application report may become outdated at the time of the submission of the complete Interconnection Request. Notwithstanding any of the provisions of this section, the Transmission Provider shall, in good faith, include data in the pre-application report that represents the best available information at the time of reporting.

1.3 Interconnection Request

The Interconnection Customer shall submit its Interconnection Request to the Transmission Provider, together with the processing fee or deposit specified in the Interconnection Request. The Interconnection Request shall be date- and time-stamped upon receipt. The original date- and time-stamp applied to the Interconnection Request at the time of its original submission shall be accepted as the qualifying date- and time-stamp for the purposes of any timetable in these procedures. The Interconnection Customer shall be notified of receipt by the Transmission Provider within three Business Days of receiving the Interconnection Request. The Transmission Provider shall notify the Interconnection Customer within ten Business Days of the receipt of the Interconnection Request as to whether the Interconnection Request is complete or incomplete. If the Interconnection Request is incomplete, the Transmission Provider shall provide along with the notice that the Interconnection Request is incomplete, a written list detailing all information that must be provided to complete the Interconnection Request. The Interconnection Customer will have ten Business Days after receipt of the notice to submit the listed information or to request an extension of time to provide such information. If the Interconnection Customer does not provide the listed information or a request for an extension of time within the deadline, the Interconnection Request will be deemed withdrawn. An Interconnection Request will be deemed complete upon submission of the listed information to the Transmission Provider.

1.4 Modification of the Interconnection Request

Any modification to machine data or equipment configuration or to the interconnection site of the Small Generating Facility not agreed to in writing by the Transmission Provider and the Interconnection Customer may be deemed a withdrawal of the Interconnection Request and may require submission of a new Interconnection Request, unless proper notification of each Party by the other and a reasonable time to cure the problems created by the changes are undertaken.

1.5 Site Control

Documentation of site control must be submitted with the Interconnection Request. Site control may be demonstrated through:

1.5.1 Ownership of, a leasehold interest in, or a right to develop a site for the purpose of constructing the Small Generating Facility;

1.5.2 An option to purchase or acquire a leasehold site for such purpose; or

1.5.3 An exclusivity or other business relationship between the Interconnection Customer and the entity having the right to sell, lease, or grant the Interconnection Customer the right to possess or occupy a site for such purpose.

1.6 Queue Position

The Transmission Provider shall assign a Queue Position based upon the date- and time-stamp of the Interconnection Request. The Queue Position of each Interconnection Request will be used to determine the cost responsibility for the Upgrades necessary to accommodate the interconnection. The Transmission Provider shall maintain a single queue per geographic region. At the Transmission Provider's option, Interconnection Requests may be studied serially or in clusters for the purpose of the system impact study.

1.6.1 Clustering of Requests for a Resource Solicitation

If multiple Interconnection Requests are filed by an eligible entity as the authorized representative for those Interconnection Customer(s) proposing either a Large or Small Generating Facility to meet some portion of the eligible entity's request for additional generating resources in a Resource Solicitation Process, Transmission Provider may cluster combinations of such Interconnection Requests for purposes of conducting the Interconnection Feasibility Study(ies) and Interconnection System Impact Study(ies) of such Generating Facilities. Such studies in connection with a Resource Solicitation Process shall be implemented based upon Queue Position and shall consider the eligible entity's identified need in the Resource Solicitation Process.

An Interconnection Customer may submit to the authorized representative for inclusion in the Resource Solicitation Process an Interconnection Request for a Generating Facility that already has a Queue Position pursuant to Section 1.6. An Interconnection Customer that initially reserves a Queue Position for a Generating Facility through the Resource Solicitation Process may reserve a Queue Position separate from the Resource Solicitation Process pursuant to Section 1.6. In either case, the Interconnection Customer must meet all requirements associated with maintaining each Queue Position for the Generating Facility.

A Generating Facility in the Resource Solicitation Process is subject to study according to the Queue Position in the process. A Generating Facility that is not a part of the Resource Solicitation Process is subject to study according to its Queue Position pursuant to Section 1.6. All studies must be done in accordance with the provisions of the SGIP, and may not be delayed as a result of the Resource Solicitation Process.

In order to facilitate Transmission Provider's study of Interconnection Requests made in connection with a Resource Solicitation Process, the eligible entity must: a) act as the authorized representative for all Interconnection Requests submitted, b) submit all Interconnection Requests arising from the Resource Solicitation Process at the same time to ensure simultaneous Queue Positions for all such Interconnection Requests, c) cooperate with Transmission Provider in conducting

the studies, and d) request that studies be conducted of a reasonable number of different combinations of such Interconnection Requests to meet the eligible entity's identified need in the Resource Solicitation Process.

After Transmission Provider completes the Interconnection System Impact Studies of the requested combinations, the results will be provided to the eligible entity for use in the Resource Solicitation Process. The results will be posted on Transmission Provider's OASIS consistent with the posting of other study results. After receipt of these studies, the eligible entity must select one of the studied combinations prior to the start of any Interconnection Facility Study associated with the Resource Solicitation Process. Prior to the completion of the Interconnection Facilities Study of all of the components of the selected combination, the eligible entity may replace components of the selected combination. While conducting the Interconnection Facilities Study(ies), Transmission Provider may suspend further action on the Interconnection Requests in the Resource Solicitation Process that are not included in the selected combination. Once a Generating Facility is rejected in the Resource Solicitation Process, it shall lose the Queue Position it held as part of the Resource Solicitation Process. If a Generating Facility is selected by the eligible entity at the conclusion of the Resource Solicitation Process, the Generating Facility may no longer maintain more than one Queue Position.

For purposes of this section 1.6.1, "eligible entity" means any entity subject to or conducting a Resource Solicitation Process, and "Resource Solicitation Process" means any process authorized or required by Applicable Laws and Regulations for the acquisition of Network Resources by an entity interconnected to the Transmission System of Transmission Provider.

1.7 Interconnection Requests Submitted Prior to the Effective Date of the SGIP

Nothing in this SGIP affects an Interconnection Customer's Queue Position assigned before the effective date of this SGIP. The Parties agree to complete work on any interconnection study agreement executed prior the effective date of this SGIP in accordance with the terms and conditions of that interconnection study agreement. Any new studies or other additional work will be completed pursuant to this SGIP.

Section 2. Fast Track Process

2.1 Applicability

The Fast Track Process is available to an Interconnection Customer proposing to interconnect its Small Generating Facility with the Transmission Provider's Distribution System if the Small Generating Facility's capacity does not exceed the size limits identified in the table below. Small Generating Facilities below these limits are eligible for Fast Track review. However, Fast Track eligibility is distinct from the Fast Track Process itself, and eligibility does not imply or indicate that a Small Generating Facility will pass the Fast Track screens in section 2.2.1 below or the Supplemental Review screens in section 2.4.4 below

Fast Track eligibility is determined based upon the generator type, the size of the generator, voltage of the line and the location of and the type of line at the Point of Interconnection. All Small Generating Facilities connecting to lines greater than 69 kilovolt (kV) are ineligible for the Fast Track Process regardless of size. All synchronous and induction machines must be no larger than 2 MW to be eligible for the Fast Track Process, regardless of location. For certified inverter-based systems, the size limit varies according

to the voltage of the line at the proposed Point of Interconnection. Certified inverter-based Small Generating Facilities located within 2.5 electrical circuit miles of a substation and on a mainline (as defined in the table below) are eligible for the Fast Track Process under the higher thresholds according to the table below. In addition to the size threshold, the Interconnection Customer's proposed Small Generating Facility must meet the codes, standards, and certification requirements of Attachments 3 and 4 of these procedures, or the Transmission Provider has reviewed the design or tested the proposed Small Generating Facility and is satisfied that it is safe to operate.

Fast Track Eligibility for Inverter-Based Systems		
Line Voltage	Fast Track Eligibility Regardless of Location	Fast Track Eligibility on a Mainline[1] and ≤ 2.5 Electrical Circuit Miles from Substation[2]
< 5 kV	≤ 500 kW	≤ 500 kW
≥ 5 kV and < 15 kV	≤ 2 MW	≤ 3 MW
≥ 15 kV and < 30 kV	≤ 3 MW	≤ 4 MW
≥ 30 kV and ≤ 69 kV	≤ 4 MW	≤ 5 MW

[1] For purposes of this table, a mainline is the three-phase backbone of a circuit. It will typically constitute lines with wire sizes of 4/0 American wire gauge, 336.4 kcmil, 397.5 kcmil, 477 kcmil and 795 kcmil.
[2] An Interconnection Customer can determine this information about its proposed interconnection location in advance by requesting a pre-application report pursuant to section 1.2.

2.2 Initial Review

Within 15 Business Days after the Transmission Provider notifies the Interconnection Customer it has received a complete Interconnection Request, the Transmission Provider shall perform an initial review using the screens set forth below, shall notify the Interconnection Customer of the results, and include with the notification copies of the analysis and data underlying the Transmission Provider's determinations under the screens.

2.2.1 Screens

2.2.1.1 The proposed Small Generating Facility's Point of Interconnection must be on a portion of the Transmission Provider's Distribution System that is subject to the Tariff.

2.2.1.2 For interconnection of a proposed Small Generating Facility to a radial distribution circuit, the aggregated generation, including the proposed Small Generating Facility, on the circuit shall not exceed 15 % of the line section annual peak load as most recently measured at the substation. A line section is that portion of a Transmission Provider's electric system connected to a customer bounded by automatic sectionalizing devices or the end of the distribution line.

2.2.1.3 For interconnection of a proposed Small Generating Facility to the load side of spot network protectors, the proposed Small Generating Facility must utilize an inverter-based equipment package and, together with the aggregated other inverter-based generation, shall not exceed the smaller of 5 % of a spot network's maximum load or 50 kW.[3]

[3] A spot Network is a type of distribution system found within modern commercial buildings to provide high reliability of service to a single customer. (Standard Handbook for Electrical Engineers, 11th edition, Donald Fink, McGraw Hill Book Company).

2.2.1.4 The proposed Small Generating Facility, in aggregation with other generation on the distribution circuit, shall not contribute more than 10 % to the distribution circuit's maximum fault current at the point on the high voltage (primary) level nearest the proposed point of change of ownership.

2.2.1.5 The proposed Small Generating Facility, in aggregate with other generation on the distribution circuit, shall not cause any distribution protective devices and equipment (including, but not limited to, substation breakers, fuse cutouts, and line reclosers), or Interconnection Customer equipment on the system to exceed 87.5 % of the short circuit interrupting capability; nor shall the interconnection proposed for a circuit that already exceeds 87.5 % of the short circuit interrupting capability.

2.2.1.6 Using the table below, determine the type of interconnection to a primary distribution line. This screen includes a review of the type of electrical service provided to the Interconnecting Customer, including line configuration and the transformer connection to limit the potential for creating over-voltages on the Transmission Provider's electric power system due to a loss of ground during the operating time of any anti-islanding function.

Primary Distribution Line Type	**Type of Interconnection to Primary Distribution Line**	**Result/Criteria**
Three-phase, three wire	3-phase or single phase, phase-to-phase	Pass screen
Three-phase, four wire	Effectively-grounded 3 phase or Single-phase, line-to-neutral	Pass screen

2.2.1.7 If the proposed Small Generating Facility is to be interconnected on single-phase shared secondary, the aggregate generation capacity on the shared secondary, including the proposed Small Generating Facility, shall not exceed 20 kW.

2.2.1.8 If the proposed Small Generating Facility is single-phase and is to be interconnected on a center tap neutral of a 240 volt service, its addition shall not create an imbalance between the two sides of the 240 volt service of more than 20 % of the nameplate rating of the service transformer.

2.2.1.9 The Small Generating Facility, in aggregate with other generation interconnected to the transmission side of a substation transformer feeding the circuit where the Small Generating Facility proposes to interconnect shall not exceed 10 MW in an area where there are known, or posted, transient stability limitations to generating units located in the general electrical vicinity (e.g., three or four transmission busses from the point of interconnection).

2.2.1.10 No construction of facilities by the Transmission Provider on its own system shall be required to accommodate the Small Generating Facility.

2.2.2 If the proposed interconnection passes the screens, the Interconnection Request shall be approved and the Transmission Provider will provide the Interconnection Customer an executable interconnection agreement within five Business Days after the determination.

2.2.3 If the proposed interconnection fails the screens, but the Transmission Provider determines that the Small Generating Facility may nevertheless be interconnected consistent with safety, reliability, and power quality standards, the Transmission Provider shall provide the Interconnection Customer an executable interconnection agreement within five Business Days after the determination.

2.2.4 If the proposed interconnection fails the screens, but the Transmission Provider does not or cannot determine from the initial review that the Small Generating Facility may nevertheless be interconnected consistent with safety, reliability, and power quality standards unless the Interconnection Customer is willing to consider minor modifications or further study, the Transmission Provider shall provide the Interconnection Customer with the opportunity to attend a customer options meeting.

2.3 Customer Options Meeting

If the Transmission Provider determines the Interconnection Request cannot be approved without (1) minor modifications at minimal cost, or (2) supplemental study or other additional studies or actions, or (3) incurring significant cost to address safety, reliability, or power quality problems, the Transmission Provider shall notify the Interconnection Customer of that determination within five Business Days after the determination and provide copies of all data and analyses underlying its conclusion. Within ten Business Days of the Transmission Provider's determination, the Transmission Provider shall offer to convene a customer options meeting with the Transmission Provider to review possible Interconnection Customer facility modifications or the screen analysis and related results, to determine what further steps are needed to permit the Small Generating Facility to be connected safely and reliably. At the time of notification of the Transmission Provider's determination, or at the customer options meeting, the Transmission Provider shall:

2.3.1 Offer to perform facility modifications or minor modifications to the Transmission Provider's electric system (e.g., changing meters, fuses, relay settings) and provide a non-binding good faith estimate of the limited cost to make such modifications to the Transmission Provider's electric system. If the Interconnection Customer agrees to pay for the modifications to the Transmission Provider’s electric system, the Transmission Provider will provide the Interconnection Customer with an

executable interconnection agreement within ten Business Days of the customer options meeting; or

2.3.2 Offer to perform a supplemental review in accordance with section 2.4 and provide a non-binding good faith estimate of the costs of such review; or

2.3.3 Obtain the Interconnection Customer's agreement to continue evaluating the Interconnection Request under the section 3 Study Process.

2.4 Supplemental Review

2.4.1 To accept the offer of a supplemental review, the Interconnection Customer shall agree in writing and submit a deposit for the estimated costs of the supplemental review in the amount of the Transmission Provider's good faith estimate of the costs of such review, both within 15 Business Days of the offer. If the written agreement and deposit have not been received by the Transmission Provider within that timeframe, the Interconnection Request shall continue to be evaluated under the section 3 Study Process unless it is withdrawn by the Interconnection Customer.

2.4.2 The Interconnection Customer may specify the order in which the Transmission Provider will complete the screens in section 2.4.4.

2.4.3 The Interconnection Customer shall be responsible for the Transmission Provider's actual costs for conducting the supplemental review. The Interconnection Customer must pay any review costs that exceed the deposit within 20 Business Days of receipt of the invoice or resolution of any dispute. If the deposit exceeds the invoiced costs, the Transmission Provider will return such excess within 20 Business Days of the invoice without interest.

2.4.4 Within 30 Business Days following receipt of the deposit for a supplemental review, the Transmission Provider shall (1) perform a supplemental review using the screens set forth below; (2) notify in writing the Interconnection Customer of the results; and (3) include with the notification copies of the analysis and data underlying the Transmission Provider's determinations under the screens. Unless the Interconnection Customer provided instructions for how to respond to the failure of any of the supplemental review screens below at the time the Interconnection Customer accepted the offer of supplemental review, the Transmission Provider shall notify the Interconnection Customer following the failure of any of the screens, or if it is unable to perform the screen in section 2.4.4.1, within two Business Days of making such determination to obtain the Interconnection Customer's permission to: (1) continue evaluating the proposed interconnection under this section 2.4.4; (2) terminate the supplemental review and continue evaluating the Small Generating Facility under section 3; or (3) terminate the supplemental review upon withdrawal of the Interconnection Request by the Interconnection Customer.

2.4.4.1 Minimum Load Screen: Where 12 months of line section minimum load data (including onsite load but not station service load served by the proposed Small Generating Facility) are available, can be calculated, can be estimated from existing data, or determined from a power flow model, the aggregate Generating Facility capacity on the line section is less than 100% of the minimum load for all line sections bounded by

automatic sectionalizing devices upstream of the proposed Small Generating Facility. If minimum load data is not available, or cannot be calculated, estimated or determined, the Transmission Provider shall include the reason(s) that it is unable to calculate, estimate or determine minimum load in its supplemental review results notification under section 2.4.4.

2.4.4.1.1 The type of generation used by the proposed Small Generating Facility will be taken into account when calculating, estimating, or determining circuit or line section minimum load relevant for the application of screen 2.4.4.1. Solar photovoltaic (PV) generation systems with no battery storage use daytime minimum load (i.e. 10 a.m. to 4 p.m. for fixed panel systems and 8 a.m. to 6 p.m. for PV systems utilizing tracking systems), while all other generation uses absolute minimum load.

2.4. 4.1.2 When this screen is being applied to a Small Generating Facility that serves some station service load, only the net injection into the Transmission Provider's electric system will be considered as part of the aggregate generation.

2.4. 4.1.3 Transmission Provider will not consider as part of the aggregate generation for purposes of this screen generating facility capacity known to be already reflected in the minimum load data.

2.4.4.2 Voltage and Power Quality Screen: In aggregate with existing generation on the line section: (1) the voltage regulation on the line section can be maintained in compliance with relevant requirements under all system conditions; (2) the voltage fluctuation is within acceptable limits as defined by Institute of Electrical and Electronics Engineers (IEEE) Standard 1453, or utility practice similar to IEEE Standard 1453; and (3) the harmonic levels meet IEEE Standard 519 limits.

2.4.4.3 Safety and Reliability Screen: The location of the proposed Small Generating Facility and the aggregate generation capacity on the line section do not create impacts to safety or reliability that cannot be adequately addressed without application of the Study Process. The Transmission Provider shall give due consideration to the following and other factors in determining potential impacts to safety and reliability in applying this screen.

2.4.4.3.1 Whether the line section has significant minimum loading levels dominated by a small number of customers (e.g., several large commercial customers).

2.4.4.3.2 Whether the loading along the line section is uniform or even.

2.4.4.3.3 Whether the proposed Small Generating Facility is located in close proximity to the substation (i.e., less than 2.5 electrical circuit miles), and whether the line section from the substation to the Point of Interconnection is a Mainline rated for normal and emergency ampacity.

2.4.4.3.4 Whether the proposed Small Generating Facility incorporates a time delay function to prevent reconnection of the generator to the system until system voltage and frequency are within normal limits for a prescribed time.

2.4.4.3.5 Whether operational flexibility is reduced by the proposed Small Generating Facility, such that transfer of the line section(s) of the Small Generating Facility to a neighboring distribution circuit/substation may trigger overloads or voltage issues.

2.4.4.3.6 Whether the proposed Small Generating Facility employs equipment or systems certified by a recognized standards organization to address technical issues such as, but not limited to, islanding, reverse power flow, or voltage quality.

2.4.5 If the proposed interconnection passes the supplemental screens in sections 2.4.4.1, 2.4.4.2, and 2.4.4.3 above, the Interconnection Request shall be approved and the Transmission Provider will provide the Interconnection Customer with an executable interconnection agreement within the timeframes established in sections 2.4.5.1 and 2.4.5.2 below. If the proposed interconnection fails any of the supplemental review screens and the Interconnection Customer does not withdraw its Interconnection Request, it shall continue to be evaluated under the section 3 Study Process consistent with section 2.4.5.3 below.

2.4.5.1 If the proposed interconnection passes the supplemental screens in sections 2.4.4.1, 2.4.4.2, and 2.4.4.3 above and does not require construction of facilities by the Transmission Provider on its own system, the interconnection agreement shall be provided within ten Business Days after the notification of the supplemental review results.

2.4.5.2 If interconnection facilities or minor modifications to the Transmission Provider's system are required for the proposed interconnection to pass

the supplemental screens in sections 2.4.4.1, 2.4.4.2, and 2.4.4.3 above, and the Interconnection Customer agrees to pay for the modifications to the Transmission Provider's electric system, the interconnection agreement, along with a non-binding good faith estimate for the interconnection facilities and/or minor modifications, shall be provided to the Interconnection Customer within 15 Business Days after receiving written notification of the supplemental review results.

2.4.5.3 If the proposed interconnection would require more than interconnection facilities or minor modifications to the Transmission Provider's system to pass the supplemental screens in sections 2.4.4.1, 2.4.4.2, and 2.4.4.3 above, the Transmission Provider shall notify the Interconnection Customer, at the same time it notifies the Interconnection Customer with the supplemental review results, that the Interconnection Request shall be evaluated under the section 3 Study Process unless the Interconnection Customer withdraws its Small Generating Facility.

Section 3. Study Process

3.1 Applicability

The Study Process shall be used by an Interconnection Customer proposing to interconnect its Small Generating Facility with the Transmission Provider's Transmission System or Distribution System if the Small Generating Facility (1) is larger than 2 MW but no larger than 20 MW, (2) is not certified, or (3) is certified but did not pass the Fast Track Process or the 10 kW Inverter Process.

3.2 Scoping Meeting

3.2.1 A scoping meeting will be held within ten Business Days after the Interconnection Request is deemed complete, or as otherwise mutually agreed to by the Parties. The Transmission Provider and the Interconnection Customer will bring to the meeting personnel, including system engineers and other resources as may be reasonably required to accomplish the purpose of the meeting.

3.2.2 The purpose of the scoping meeting is to discuss the Interconnection Request and review existing studies relevant to the Interconnection Request. The Parties shall further discuss whether the Transmission Provider should perform a feasibility study or proceed directly to a system impact study, or a facilities study, or an interconnection agreement. If the Parties agree that a feasibility study should be performed, the Transmission Provider shall provide the Interconnection Customer, as soon as possible, but not later than five Business Days after the scoping meeting, a feasibility study agreement (Attachment 6) including an outline of the scope of the study and a non-binding good faith estimate of the cost to perform the study.

3.2.3 The scoping meeting may be omitted by mutual agreement. In order to remain in consideration for interconnection, an Interconnection Customer who has requested a feasibility study must return the executed feasibility study agreement within 15

Business Days. If the Parties agree not to perform a feasibility study, the Transmission Provider shall provide the Interconnection Customer, no later than five Business Days after the scoping meeting, a system impact study agreement (Attachment 7) including an outline of the scope of the study and a non-binding good faith estimate of the cost to perform the study.

3.3 Feasibility Study

3.3.1 The feasibility study shall identify any potential adverse system impacts that would result from the interconnection of the Small Generating Facility.

3.3.2 A deposit of the lesser of 50 percent of the good faith estimated feasibility study costs or earnest money of $1,000 may be required from the Interconnection Customer.

3.3.3 The scope of and cost responsibilities for the feasibility study are described in the attached feasibility study agreement (Attachment 6).

3.3.4 If the feasibility study shows no potential for adverse system impacts, the Transmission Provider shall send the Interconnection Customer a facilities study agreement, including an outline of the scope of the study and a non-binding good faith estimate of the cost to perform the study. If no additional facilities are required, the Transmission Provider shall send the Interconnection Customer an executable interconnection agreement within five Business Days.

3.3.5 If the feasibility study shows the potential for adverse system impacts, the review process shall proceed to the appropriate system impact study(s).

3.4 System Impact Study

3.4.1 A system impact study shall identify and detail the electric system impacts that would result if the proposed Small Generating Facility were interconnected without project modifications or electric system modifications, focusing on the adverse system impacts identified in the feasibility study, or to study potential impacts, including but not limited to those identified in the scoping meeting. A system impact study shall evaluate the impact of the proposed interconnection on the reliability of the electric system.

3.4.2 If no transmission system impact study is required, but potential electric power Distribution System adverse system impacts are identified in the scoping meeting or shown in the feasibility study, a distribution system impact study must be performed. The Transmission Provider shall send the Interconnection Customer a distribution system impact study agreement within 15 Business Days of transmittal of the feasibility study report, including an outline of the scope of the study and a non-binding good faith estimate of the cost to perform the study, or following the scoping meeting if no feasibility study is to be performed.

3.4.3 In instances where the feasibility study or the distribution system impact study shows potential for transmission system adverse system impacts, within five Business Days following transmittal of the feasibility study report, the Transmission Provider shall send the Interconnection Customer a transmission system impact

study agreement, including an outline of the scope of the study and a non-binding good faith estimate of the cost to perform the study, if such a study is required.

3.4.4 If a transmission system impact study is not required, but electric power Distribution System adverse system impacts are shown by the feasibility study to be possible and no distribution system impact study has been conducted, the Transmission Provider shall send the Interconnection Customer a distribution system impact study agreement.

3.4.5 If the feasibility study shows no potential for transmission system or Distribution System adverse system impacts, the Transmission Provider shall send the Interconnection Customer either a facilities study agreement (Attachment 8), including an outline of the scope of the study and a non-binding good faith estimate of the cost to perform the study, or an executable interconnection agreement, as applicable.

3.4.6 In order to remain under consideration for interconnection, the Interconnection Customer must return executed system impact study agreements, if applicable, within 30 Business Days.

3.4.7 A deposit of the good faith estimated costs for each system impact study may be required from the Interconnection Customer.

3.4.8 The scope of and cost responsibilities for a system impact study are described in the attached system impact study agreement.

3.4.9 Where transmission systems and Distribution Systems have separate owners, such as is the case with transmission-dependent utilities ("TDUs") – whether investor-owned or not – the Interconnection Customer may apply to the nearest Transmission Provider (Transmission Owner, Regional Transmission Operator, or Independent Transmission Provider) providing transmission service to the TDU to request project coordination. Affected Systems shall participate in the study and provide all information necessary to prepare the study.

3.5 Facilities Study

3.5.1 Once the required system impact study(s) is completed, a system impact study report shall be prepared and transmitted to the Interconnection Customer along with a facilities study agreement within five Business Days, including an outline of the scope of the study and a non-binding good faith estimate of the cost to perform the facilities study. In the case where one or both impact studies are determined to be unnecessary, a notice of the fact shall be transmitted to the Interconnection Customer within the same timeframe.

3.5.2 In order to remain under consideration for interconnection, or, as appropriate, in the Transmission Provider's interconnection queue, the Interconnection Customer must return the executed facilities study agreement or a request for an extension of time within 30 Business Days.

3.5.3 The facilities study shall specify and estimate the cost of the equipment, engineering, procurement and construction work (including overheads) needed to implement the conclusions of the system impact study(s).

3.5.4 Design for any required Interconnection Facilities and/or Upgrades shall be performed under the facilities study agreement. The Transmission Provider may contract with consultants to perform activities required under the facilities study agreement. The Interconnection Customer and the Transmission Provider may agree to allow the Interconnection Customer to separately arrange for the design of some of the Interconnection Facilities. In such cases, facilities design will be reviewed and/or modified prior to acceptance by the Transmission Provider, under the provisions of the facilities study agreement. If the Parties agree to separately arrange for design and construction, and provided security and confidentiality requirements can be met, the Transmission Provider shall make sufficient information available to the Interconnection Customer in accordance with confidentiality and critical infrastructure requirements to permit the Interconnection Customer to obtain an independent design and cost estimate for any necessary facilities.

3.5.5 A deposit of the good faith estimated costs for the facilities study may be required from the Interconnection Customer.

3.5.6 The scope of and cost responsibilities for the facilities study are described in the attached facilities study agreement.

3.5.7 Upon completion of the facilities study, and with the agreement of the Interconnection Customer to pay for Interconnection Facilities and Upgrades identified in the facilities study, the Transmission Provider shall provide the Interconnection Customer an executable interconnection agreement within five Business Days.

Section 4. Provisions that Apply to All Interconnection Requests

4.1 Reasonable Efforts

The Transmission Provider shall make reasonable efforts to meet all time frames provided in these procedures unless the Transmission Provider and the Interconnection Customer agree to a different schedule. If the Transmission Provider cannot meet a deadline provided herein, it shall notify the Interconnection Customer, explain the reason for the failure to meet the deadline, and provide an estimated time by which it will complete the applicable interconnection procedure in the process.

4.2 Disputes

4.2.1 The Parties agree to attempt to resolve all disputes arising out of the interconnection process according to the provisions of this article.

4.2.2 In the event of a dispute, either Party shall provide the other Party with a written Notice of Dispute. Such Notice shall describe in detail the nature of the dispute.

4.2.3 If the dispute has not been resolved within two Business Days after receipt of the Notice, either Party may contact FERC's Dispute Resolution Service (DRS) for assistance in resolving the dispute.

4.2.4 The DRS will assist the Parties in either resolving their dispute or in selecting an appropriate dispute resolution venue (e.g., mediation, settlement judge, early neutral evaluation, or technical expert) to assist the Parties in resolving their dispute. DRS can be reached at 1-877-337-2237 or via the internet at http://www.ferc.gov/legal/adr.asp.

4.2.5 Each Party agrees to conduct all negotiations in good faith and will be responsible for one-half of any costs paid to neutral third-parties.

4.2.6 If neither Party elects to seek assistance from the DRS or if the attempted dispute resolution fails, then either Party may exercise whatever rights and remedies it may have in equity or law consistent with the terms of these procedures.

4.3 Interconnection Metering

Any metering necessitated by the use of the Small Generating Facility shall be installed at the Interconnection Customer's expense in accordance with Federal Energy Regulatory Commission, state, or local regulatory requirements or the Transmission Provider's specifications.

4.4 Commissioning

Commissioning tests of the Interconnection Customer's installed equipment shall be performed pursuant to applicable codes and standards. The Transmission Provider must be given at least five Business Days written notice, or as otherwise mutually agreed to by the Parties, of the tests and may be present to witness the commissioning tests.

4.5. Confidentiality

4.5.1 Confidential information shall mean any confidential and/or proprietary information provided by one Party to the other Party that is clearly marked or otherwise designated "Confidential." For purposes of these procedures all design, operating specifications, and metering data provided by the Interconnection Customer shall be deemed confidential information regardless of whether it is clearly marked or otherwise designated as such.

4.5.2 Confidential Information does not include information previously in the public domain, required to be publicly submitted or divulged by Governmental Authorities (after notice to the other Party and after exhausting any opportunity to oppose such publication or release), or necessary to be divulged in an action to enforce these procedures. Each Party receiving Confidential Information shall hold such information in confidence and shall not disclose it to any third party nor to the public without the prior written authorization from the Party providing that information, except to fulfill obligations under these procedures, or to fulfill legal or regulatory requirements.

4.5.2.1 Each Party shall employ at least the same standard of care to protect Confidential Information obtained from the other Party as it employs to protect its own Confidential Information.

4.5.2.2 Each Party is entitled to equitable relief, by injunction or otherwise, to enforce its rights under this provision to prevent the release of Confidential Information without bond or proof of damages, and may seek other remedies available at law or in equity for breach of this provision.

4.5.3 Notwithstanding anything in this article to the contrary, and pursuant to 18 CFR § 1b.20, if FERC, during the course of an investigation or otherwise, requests information from one of the Parties that is otherwise required to be maintained in confidence pursuant to these procedures, the Party shall provide the requested information to FERC, within the time provided for in the request for information. In providing the information to FERC, the Party may, consistent with 18 CFR § 388.112, request that the information be treated as confidential and non-public by FERC and that the information be withheld from public disclosure. Parties are prohibited from notifying the other Party prior to the release of the Confidential Information to FERC. The Party shall notify the other Party when it is notified by FERC that a request to release Confidential Information has been received by FERC, at which time either of the Parties may respond before such information would be made public, pursuant to 18 CFR § 388.112. Requests from a state regulatory body conducting a confidential investigation shall be treated in a similar manner if consistent with the applicable state rules and regulations.

4.6 Comparability

The Transmission Provider shall receive, process and analyze all Interconnection Requests in a timely manner as set forth in this document. The Transmission Provider shall use the same reasonable efforts in processing and analyzing Interconnection Requests from all Interconnection Customers, whether the Small Generating Facility is owned or operated by the Transmission Provider, its subsidiaries or affiliates, or others.

4.7 Record Retention

The Transmission Provider shall maintain for three years records, subject to audit, of all Interconnection Requests received under these procedures, the times required to complete Interconnection Request approvals and disapprovals, and justification for the actions taken on the Interconnection Requests.

4.8 Interconnection Agreement

After receiving an interconnection agreement from the Transmission Provider, the Interconnection Customer shall have 30 Business Days or another mutually agreeable timeframe to sign and return the interconnection agreement, or request that the Transmission Provider file an unexecuted interconnection agreement with the Federal Energy Regulatory Commission. If the Interconnection Customer does not sign the interconnection agreement, or ask that it be filed unexecuted by the Transmission Provider within 30 Business Days, the Interconnection Request shall be deemed withdrawn. After the interconnection agreement is signed by the Parties, the interconnection of the Small Generating Facility shall proceed under the provisions of the interconnection agreement.

4.9 Coordination with Affected Systems

The Transmission Provider shall coordinate the conduct of any studies required to determine the impact of the Interconnection Request on Affected Systems with Affected System operators and, if possible, include those results (if available) in its applicable

interconnection study within the time frame specified in these procedures. The Transmission Provider will include such Affected System operators in all meetings held with the Interconnection Customer as required by these procedures. The Interconnection Customer will cooperate with the Transmission Provider in all matters related to the conduct of studies and the determination of modifications to Affected Systems. A Transmission Provider which may be an Affected System shall cooperate with the Transmission Provider with whom interconnection has been requested in all matters related to the conduct of studies and the determination of modifications to Affected Systems.

4.10 Capacity of the Small Generating Facility

4.10.1 If the Interconnection Request is for an increase in capacity for an existing Small Generating Facility, the Interconnection Request shall be evaluated on the basis of the new total capacity of the Small Generating Facility.

4.10.2 If the Interconnection Request is for a Small Generating Facility that includes multiple energy production devices at a site for which the Interconnection Customer seeks a single Point of Interconnection, the Interconnection Request shall be evaluated on the basis of the aggregate capacity of the multiple devices.

4.10.3 The Interconnection Request shall be evaluated using the maximum capacity that the Small Generating Facility is capable of injecting into the Transmission Provider's electric system. However, if the maximum capacity that the Small Generating Facility is capable of injecting into the Transmission Provider's electric system is limited (e.g., through use of a control system, power relay(s), or other similar device settings or adjustments), then the Interconnection Customer must obtain the Transmission Provider's agreement, with such agreement not to be unreasonably withheld, that the manner in which the Interconnection Customer proposes to implement such a limit will not adversely affect the safety and reliability of the Transmission Provider's system. If the Transmission Provider does not so agree, then the Interconnection Request must be withdrawn or revised to specify the maximum capacity that the Small Generating Facility is capable of injecting into the Transmission Provider's electric system without such limitations. Furthermore, nothing in this section shall prevent a Transmission Provider from considering an output higher than the limited output, if appropriate, when evaluating system protection impacts.

Attachment 1

Glossary of Terms

10 kW Inverter Process – The procedure for evaluating an Interconnection Request for a certified inverter-based Small Generating Facility no larger than 10 kW that uses the section 2 screens. The application process uses an all-in-one document that includes a simplified Interconnection Request, simplified procedures, and a brief set of terms and conditions. See SGIP Attachment 5.

Affected System – An electric system other than the Transmission Provider's Transmission System that may be affected by the proposed interconnection.

Business Day – Monday through Friday, excluding Federal Holidays.

Distribution System – The Transmission Provider's facilities and equipment used to transmit electricity to ultimate usage points such as homes and industries directly from nearby generators or from interchanges with higher voltage transmission networks which transport bulk power over longer distances. The voltage levels at which Distribution Systems operate differ among areas.

Distribution Upgrades – The additions, modifications, and upgrades to the Transmission Provider's Distribution System at or beyond the Point of Interconnection to facilitate interconnection of the Small Generating Facility and render the transmission service necessary to effect the Interconnection Customer's wholesale sale of electricity in interstate commerce. Distribution Upgrades do not include Interconnection Facilities.

Good Utility Practice – Any of the practices, methods and acts engaged in or approved by a significant portion of the electric industry during the relevant time period, or any of the practices, methods and acts which, in the exercise of reasonable judgment in light of the facts known at the time the decision was made, could have been expected to accomplish the desired result at a reasonable cost consistent with good business practices, reliability, safety and expedition. Good Utility Practice is not intended to be limited to the optimum practice, method, or act to the exclusion of all others, but rather to be acceptable practices, methods, or acts generally accepted in the region.

Fast Track Process – The procedure for evaluating an Interconnection Request for a certified Small Generating Facility that meets the eligibility requirements of section 2.1 and includes the section 2 screens, customer options meeting, and optional supplemental review.

Interconnection Customer – Any entity, including the Transmission Provider, the Transmission Owner or any of the affiliates or subsidiaries of either, that proposes to interconnect its Small Generating Facility with the Transmission Provider's Transmission System.

Interconnection Facilities – The Transmission Provider's Interconnection Facilities and the Interconnection Customer's Interconnection Facilities. Collectively, Interconnection Facilities include all facilities and equipment between the Small Generating Facility and the Point of Interconnection, including any modification, additions or upgrades that are necessary to physically and electrically interconnect the Small Generating Facility to the Transmission Provider's Transmission System. Interconnection Facilities are sole use facilities and shall not include Distribution Upgrades or Network Upgrades.

Interconnection Request – The Interconnection Customer's request, in accordance with the Tariff, to interconnect a new Small Generating Facility, or to increase the capacity of, or make a

Material Modification to the operating characteristics of, an existing Small Generating Facility that is interconnected with the Transmission Provider's Transmission System.

Material Modification – A modification that has a material impact on the cost or timing of any Interconnection Request with a later queue priority date.

Network Resource – Any designated generating resource owned, purchased, or leased by a Network Customer under the Network Integration Transmission Service Tariff. Network Resources do not include any resource, or any portion thereof, that is committed for sale to third parties or otherwise cannot be called upon to meet the Network Customer's Network Load on a non-interruptible basis.

Network Resource Interconnection Service – An Interconnection Service that allows the Interconnection Customer to integrate its Generating Facility with the Transmission Provider's System (1) in a manner comparable to that in which the Transmission Provider integrates its generating facilities to serve native load customers; or (2) in an RTO or ISO with market based congestion management, in the same manner as Network Resources. Network Resource Interconnection Service in and of itself does not convey transmission service.

Network Upgrades – Additions, modifications, and upgrades to the Transmission Provider's Transmission System required at or beyond the point at which the Small Generating Facility interconnects with the Transmission Provider's Transmission System to accommodate the interconnection with the Small Generating Facility to the Transmission Provider's Transmission System. Network Upgrades do not include Distribution Upgrades.

Party or Parties – The Transmission Provider, Transmission Owner, Interconnection Customer or any combination of the above.

Point of Interconnection – The point where the Interconnection Facilities connect with the Transmission Provider's Transmission System.

Queue Position – The order of a valid Interconnection Request, relative to all other pending valid Interconnection Requests, that is established based upon the date and time of receipt of the valid Interconnection Request by the Transmission Provider.

Small Generating Facility – The Interconnection Customer's device for the production and/or storage for later injection of electricity identified in the Interconnection Request, but shall not include the Interconnection Customer's Interconnection Facilities.

Study Process – The procedure for evaluating an Interconnection Request that includes the section 3 scoping meeting, feasibility study, system impact study, and facilities study.

Transmission Owner – The entity that owns, leases or otherwise possesses an interest in the portion of the Transmission System at the Point of Interconnection and may be a Party to the Small Generator Interconnection Agreement to the extent necessary.

Transmission Provider – The public utility (or its designated agent) that owns, controls, or operates transmission or distribution facilities used for the transmission of electricity in interstate commerce and provides transmission service under the Tariff. The term Transmission Provider

should be read to include the Transmission Owner when the Transmission Owner is separate from the Transmission Provider.

Transmission System – The facilities owned, controlled or operated by the Transmission Provider or the Transmission Owner that are used to provide transmission service under the Tariff.

Upgrades – The required additions and modifications to the Transmission Provider's Transmission System at or beyond the Point of Interconnection. Upgrades may be Network Upgrades or Distribution Upgrades. Upgrades do not include Interconnection Facilities.

Attachment 2

SMALL GENERATOR INTERCONNECTION REQUEST
(Application Form)

Transmission Provider: _____

Designated Contact Person: _____

Address: _____

Telephone Number: _____

Fax: _____

E-Mail Address: _____

An Interconnection Request is considered complete when it provides all applicable and correct information required below. Per SGIP section 1.5, documentation of site control must be submitted with the Interconnection Request.

Preamble and Instructions

An Interconnection Customer who requests a Federal Energy Regulatory Commission jurisdictional interconnection must submit this Interconnection Request by hand delivery, mail, e-mail, or fax to the Transmission Provider.

Processing Fee or Deposit:

If the Interconnection Request is submitted under the Fast Track Process, the non-refundable processing fee is $500.

If the Interconnection Request is submitted under the Study Process, whether a new submission or an Interconnection Request that did not pass the Fast Track Process, the Interconnection Customer shall submit to the Transmission Provider a deposit not to exceed $1,000 towards the cost of the feasibility study.

Interconnection Customer Information

Legal Name of the Interconnection Customer (or, if an individual, individual's name)

Name:
_____

Contact Person: _____

Mailing Address:_____

City: _____ State: _____ Zip: _____

Facility Location (if different from above): _____

Telephone (Day): _____Telephone (Evening): _____

Fax: _____ E-Mail Address: _____

Alternative Contact Information (if different from the Interconnection Customer)

Contact Name: _____

Title: _____

Address: _____

_____

Telephone (Day): _____Telephone (Evening): _____

Fax: _____E-Mail Address: _____

Application is for: ____New Small Generating Facility

____Capacity addition to Existing Small Generating Facility

If capacity addition to existing facility, please describe:_____

_____

Will the Small Generating Facility be used for any of the following?

Net Metering? Yes ___ No ___

To Supply Power to the Interconnection Customer? Yes ___No ___

To Supply Power to Others? Yes ____ No ____

For installations at locations with existing electric service to which the proposed Small Generating Facility will interconnect, provide:

_____ _____
(Local Electric Service Provider*) (Existing Account Number*)

[*To be provided by the Interconnection Customer if the local electric service provider is different from the Transmission Provider]

Contact Name: _____

Title: _____

Address: _____

_____

Telephone (Day): _____ Telephone (Evening): _____

Fax: _____ E-Mail Address: _____

Requested Point of Interconnection: _____

Interconnection Customer's Requested In-Service Date: _____

Small Generating Facility Information
Data apply only to the Small Generating Facility, not the Interconnection Facilities.

Energy Source:____ Solar____ Wind____ Hydro____ Hydro Type (e.g. Run-of-River):_____
Diesel____ Natural Gas____ Fuel Oil____ Other (state type) _____

Prime Mover: ____Fuel Cell ____Recip Engine ____Gas Turb ____Steam Turb ____Microturbine
____PV ____Other

Type of Generator: _____Synchronous _____Induction _____Inverter

Generator Nameplate Rating: ____kW (Typical) Generator Nameplate kVAR: _____

Interconnection Customer or Customer-Site Load: _____kW (if none, so state)

Typical Reactive Load (if known): _____

Maximum Physical Export Capability Requested: _____ kW

List components of the Small Generating Facility equipment package that are currently certified:

Equipment Type	Certifying Entity
1. _____	_____
2. _____	_____
3. _____	_____
4. _____	_____
5. _____	_____

Is the prime mover compatible with the certified protective relay package? ___Yes ___No

Generator (or solar collector)
Manufacturer, Model Name & Number: _____
Version Number: _____

Nameplate Output Power Rating in kW: (Summer) _____ (Winter) _____

Nameplate Output Power Rating in kVA: (Summer) _____ (Winter) _____

Individual Generator Power Factor
Rated Power Factor: Leading: _____ Lagging: _____

Total Number of Generators in wind farm to be interconnected pursuant to this

Interconnection Request: _____ Elevation: _____ ___Single phase ___Three phase

Inverter Manufacturer, Model Name & Number (if used): _____

List of adjustable set points for the protective equipment or software: _____

Note: A completed Power Systems Load Flow data sheet must be supplied with the Interconnection Request.

Small Generating Facility Characteristic Data (for inverter-based machines)

Max design fault contribution current: _____ Instantaneous or RMS ____?

Harmonics Characteristics: _____

Start-up requirements: _____

Small Generating Facility Characteristic Data (for rotating machines)

RPM Frequency: _____
(*) Neutral Grounding Resistor (If Applicable): _____

Synchronous Generators:

Direct Axis Synchronous Reactance, X_d: _____ P.U.
Direct Axis Transient Reactance, X'_d: _____P.U.
Direct Axis Subtransient Reactance, X''_d: _____P.U.
Negative Sequence Reactance, X_2: _____ P.U.
Zero Sequence Reactance, X_0: _____ P.U.
KVA Base: _____
Field Volts: _____
Field Amperes: _____

Induction Generators:

Motoring Power (kW): _____
I_2^2t or K (Heating Time Constant): _____
Rotor Resistance, Rr: _____
Stator Resistance, Rs: _____
Stator Reactance, Xs: _____
Rotor Reactance, Xr: _____
Magnetizing Reactance, Xm: _____
Short Circuit Reactance, Xd": _____
Exciting Current: _____

Temperature Rise: _____
Frame Size: _____
Design Letter: _____
Reactive Power Required In Vars (No Load): _____
Reactive Power Required In Vars (Full Load): _____
Total Rotating Inertia, H: _____ Per Unit on kVA Base

Note: Please contact the Transmission Provider prior to submitting the Interconnection Request to determine if the specified information above is required.

Excitation and Governor System Data for Synchronous Generators Only

Provide appropriate IEEE model block diagram of excitation system, governor system and power system stabilizer (PSS) in accordance with the regional reliability council criteria. A PSS may be determined to be required by applicable studies. A copy of the manufacturer's block diagram may not be substituted.

Interconnection Facilities Information

Will a transformer be used between the generator and the point of common coupling? ____Yes ____No

Will the transformer be provided by the Interconnection Customer? ____Yes ____No

Transformer Data (If Applicable, for Interconnection Customer-Owned Transformer):

Is the transformer: _____single phase _____three phase? Size: _____kVA
Transformer Impedance: _____% on _____kVA Base

If Three Phase:
Transformer Primary: _____ Volts _____ Delta _____Wye _____ Wye Grounded
Transformer Secondary: _____ Volts _____ Delta _____Wye _____ Wye Grounded
Transformer Tertiary: _____ Volts _____ Delta _____Wye _____ Wye Grounded

Transformer Fuse Data (If Applicable, for Interconnection Customer-Owned Fuse):

(Attach copy of fuse manufacturer's Minimum Melt and Total Clearing Time-Current Curves)

Manufacturer:_____ Type:_____ Size:_____ Speed:_____

Interconnecting Circuit Breaker (if applicable):

Manufacturer: _____ Type: _____

Load Rating (Amps):_____ Interrupting Rating (Amps):_____ Trip Speed (Cycles):_____

Interconnection Protective Relays (If Applicable):

If Microprocessor-Controlled:

List of Functions and Adjustable Setpoints for the protective equipment or software:

Setpoint Function	Minimum	Maximum
1. _____	_____	_____
2. _____	_____	_____
3. _____	_____	_____
4. _____	_____	_____
5. _____	_____	_____
6. _____	_____	_____

<u>If Discrete Components:</u>

(Enclose Copy of any Proposed Time-Overcurrent Coordination Curves)

Manufacturer:	Type:	Style/Catalog No.:	Proposed Setting:
_____	_____	_____	_____
Manufacturer:	Type:	Style/Catalog No.:	Proposed Setting:
_____	_____	_____	_____
Manufacturer:	Type:	Style/Catalog No.:	Proposed Setting:
_____	_____	_____	_____
Manufacturer:	Type:	Style/Catalog No.:	Proposed Setting:
_____	_____	_____	_____
Manufacturer:	Type:	Style/Catalog No.:	Proposed Setting:
_____	_____	_____	_____

<u>Current Transformer Data (If Applicable):</u>

(Enclose Copy of Manufacturer's Excitation and Ratio Correction Curves)

Manufacturer: _____

Type: _____ Accuracy Class: _____ Proposed Ratio Connection: _____

Manufacturer: _____

Type: _____ Accuracy Class: _____ Proposed Ratio Connection: _____

<u>Potential Transformer Data (If Applicable):</u>

Manufacturer: _____

Type: _____ Accuracy Class: _____ Proposed Ratio Connection: _____

Manufacturer: _____

Type: _____ Accuracy Class: _____ Proposed Ratio Connection: _____

General Information

Enclose copy of site electrical one-line diagram showing the configuration of all Small Generating Facility equipment, current and potential circuits, and protection and control schemes. This one-line diagram must be signed and stamped by a licensed Professional Engineer if the Small Generating Facility is larger than 50 kW. Is One-Line Diagram Enclosed? ____Yes ____No

Enclose copy of any site documentation that indicates the precise physical location of the proposed Small Generating Facility (e.g., USGS topographic map or other diagram or documentation).

Proposed location of protective interface equipment on property (include address if different from the Interconnection Customer's address) _____
_____

Enclose copy of any site documentation that describes and details the operation of the protection and control schemes. Is Available Documentation Enclosed? ____Yes ____No

Enclose copies of schematic drawings for all protection and control circuits, relay current circuits, relay potential circuits, and alarm/monitoring circuits (if applicable).
Are Schematic Drawings Enclosed? ___Yes ____No

Applicant Signature

I hereby certify that, to the best of my knowledge, all the information provided in this Interconnection Request is true and correct.

For Interconnection Customer:_____ Date:_____

Attachment 3

Certification Codes and Standards

IEEE1547 Standard for Interconnecting Distributed Resources with Electric Power Systems (including use of IEEE 1547.1 testing protocols to establish conformity)

UL 1741 Inverters, Converters, and Controllers for Use in Independent Power Systems

IEEE Std 929-2000 IEEE Recommended Practice for Utility Interface of Photovoltaic (PV) Systems

NFPA 70 (2002), National Electrical Code

IEEE Std C37.90.1-1989 (R1994), IEEE Standard Surge Withstand Capability (SWC) Tests for Protective Relays and Relay Systems

IEEE Std C37.90.2 (1995), IEEE Standard Withstand Capability of Relay Systems to Radiated Electromagnetic Interference from Transceivers

IEEE Std C37.108-1989 (R2002), IEEE Guide for the Protection of Network Transformers

IEEE Std C57.12.44-2000, IEEE Standard Requirements for Secondary Network Protectors

IEEE Std C62.41.2-2002, IEEE Recommended Practice on Characterization of Surges in Low Voltage (1000V and Less) AC Power Circuits

IEEE Std C62.45-1992 (R2002), IEEE Recommended Practice on Surge Testing for Equipment Connected to Low-Voltage (1000V and Less) AC Power Circuits

ANSI C84.1-1995 Electric Power Systems and Equipment – Voltage Ratings (60 Hertz)

IEEE Std 100-2000, IEEE Standard Dictionary of Electrical and Electronic Terms

NEMA MG 1-1998, Motors and Small Resources, Revision 3

IEEE Std 519-1992, IEEE Recommended Practices and Requirements for Harmonic Control in Electrical Power Systems

NEMA MG 1-2003 (Rev 2004), Motors and Generators, Revision 1

Attachment 4

Certification of Small Generator Equipment Packages

1.0 Small Generating Facility equipment proposed for use separately or packaged with other equipment in an interconnection system shall be considered certified for interconnected operation if (1) it has been tested in accordance with industry standards for continuous utility interactive operation in compliance with the appropriate codes and standards referenced below by any Nationally Recognized Testing Laboratory (NRTL) recognized by the United States Occupational Safety and Health Administration to test and certify interconnection equipment pursuant to the relevant codes and standards listed in SGIP Attachment 3, (2) it has been labeled and is publicly listed by such NRTL at the time of the interconnection application, and (3) such NRTL makes readily available for verification all test standards and procedures it utilized in performing such equipment certification, and, with consumer approval, the test data itself. The NRTL may make such information available on its website and by encouraging such information to be included in the manufacturer's literature accompanying the equipment.

2.0 The Interconnection Customer must verify that the intended use of the equipment falls within the use or uses for which the equipment was tested, labeled, and listed by the NRTL.

3.0 Certified equipment shall not require further type-test review, testing, or additional equipment to meet the requirements of this interconnection procedure; however, nothing herein shall preclude the need for an on-site commissioning test by the parties to the interconnection nor follow-up production testing by the NRTL.

4.0 If the certified equipment package includes only interface components (switchgear, inverters, or other interface devices), then an Interconnection Customer must show that the generator or other electric source being utilized with the equipment package is compatible with the equipment package and is consistent with the testing and listing specified for this type of interconnection equipment.

5.0 Provided the generator or electric source, when combined with the equipment package, is within the range of capabilities for which it was tested by the NRTL, and does not violate the interface components' labeling and listing performed by the NRTL, no further design review, testing or additional equipment on the customer side of the point of common coupling shall be required to meet the requirements of this interconnection procedure.

6.0 An equipment package does not include equipment provided by the utility.

7.0 Any equipment package approved and listed in a state by that state's regulatory body for interconnected operation in that state prior to the effective date of these small generator interconnection procedures shall be considered certified under these procedures for use in that state.

Attachment 5

Application, Procedures, and Terms and Conditions for Interconnecting a Certified Inverter-Based Small Generating Facility No Larger than 10 kW ("10 kW Inverter Process")

1.0 The Interconnection Customer ("Customer") completes the Interconnection Request ("Application") and submits it to the Transmission Provider ("Company").

2.0 The Company acknowledges to the Customer receipt of the Application within three Business Days of receipt.

3.0 The Company evaluates the Application for completeness and notifies the Customer within ten Business Days of receipt that the Application is or is not complete and, if not, advises what material is missing.

4.0 The Company verifies that the Small Generating Facility can be interconnected safely and reliably using the screens contained in the Fast Track Process in the Small Generator Interconnection Procedures (SGIP). The Company has 15 Business Days to complete this process. Unless the Company determines and demonstrates that the Small Generating Facility cannot be interconnected safely and reliably, the Company approves the Application and returns it to the Customer. Note to Customer: Please check with the Company before submitting the Application if disconnection equipment is required.

5.0 After installation, the Customer returns the Certificate of Completion to the Company. Prior to parallel operation, the Company may inspect the Small Generating Facility for compliance with standards which may include a witness test, and may schedule appropriate metering replacement, if necessary.

6.0 The Company notifies the Customer in writing that interconnection of the Small Generating Facility is authorized. If the witness test is not satisfactory, the Company has the right to disconnect the Small Generating Facility. The Customer has no right to operate in parallel until a witness test has been performed, or previously waived on the Application. The Company is obligated to complete this witness test within ten Business Days of the receipt of the Certificate of Completion. If the Company does not inspect within ten Business Days or by mutual agreement of the Parties, the witness test is deemed waived.

7.0 Contact Information – The Customer must provide the contact information for the legal applicant (i.e., the Interconnection Customer). If another entity is responsible for interfacing with the Company, that contact information must be provided on the Application.

8.0 Ownership Information – Enter the legal names of the owner(s) of the Small Generating Facility. Include the percentage ownership (if any) by any utility or public utility holding company, or by any entity owned by either.

9.0 UL1741 Listed – This standard ("Inverters, Converters, and Controllers for Use in Independent Power Systems") addresses the electrical interconnection design of various forms of generating equipment. Many manufacturers submit their equipment to a Nationally Recognized Testing Laboratory (NRTL) that verifies compliance with UL1741. This "listing" is then marked on the equipment and supporting documentation.

Application for Interconnecting a Certified Inverter-Based Small Generating Facility No Larger than 10kW

This Application is considered complete when it provides all applicable and correct information required below. Per SGIP section 1.5, documentation of site control must be submitted with the Interconnection Request. Additional information to evaluate the Application may be required.

Processing Fee

A non-refundable processing fee of $100 must accompany this Application.

Interconnection Customer

Name: _____

Contact Person: _____

Address: _____

City: _____ State: _____ Zip: _____

Telephone (Day): _____ (Evening): _____

Fax:: _____ E-Mail Address: _____

Contact (if different from Interconnection Customer)

Name: _____

Address: _____

City: _____ State: _____ Zip: _____

Telephone (Day): _____ (Evening): _____

Fax: _____ E-Mail Address: _____

Owner of the facility (include % ownership by any electric utility): _____

_____

Small Generating Facility Information
Location (if different from above): _____

Electric Service Company: _____

Account Number: _____

Inverter Manufacturer: _____ Model: _____

Nameplate Rating: ___ (kW) ___ (kVA) ___ (AC Volts)

Single Phase ___ Three Phase ___

System Design Capacity: _____ (kW) _____ (kVA)

Prime Mover: _____Photovoltaic _____Reciprocating Engine _____Fuel Cell

_____Turbine _____Other (describe)_____

Energy Source:_____Solar ____ Wind _____Hydro _____Diesel _____Natural Gas

_____Fuel Oil ___ Other (describe)_____

Is the equipment UL1741 Listed? Yes____ No____

If Yes, attach manufacturer's cut-sheet showing UL1741 listing

Estimated Installation Date: _____ Estimated In-Service Date: _____

The 10 kW Inverter Process is available only for inverter-based Small Generating Facilities no larger than 10 kW that meet the codes, standards, and certification requirements of Attachments 3 and 4 of the Small Generator Interconnection Procedures (SGIP), or the Transmission Provider has reviewed the design or tested the proposed Small Generating Facility and is satisfied that it is safe to operate.

List components of the Small Generating Facility equipment package that are currently certified:

Equipment Type	Certifying Entity
1. _____	_____
2. _____	_____
3. _____	_____
4. _____	_____
5. _____	_____

Interconnection Customer Signature

I hereby certify that, to the best of my knowledge, the information provided in this Application is true. I agree to abide by the Terms and Conditions for Interconnecting an Inverter-Based Small Generating Facility No Larger than 10kW and return the Certificate of Completion when the Small Generating Facility has been installed.

Signed: _____

Title: _____ Date: _____

.....

Contingent Approval to Interconnect the Small Generating Facility

(For Company use only)

Interconnection of the Small Generating Facility is approved contingent upon the Terms and Conditions for Interconnecting an Inverter-Based Small Generating Facility No Larger than 10kW and return of the Certificate of Completion.

Company Signature: _____

Title: _____ Date: _____

Application ID number: _____

Company waives inspection/witness test? Yes___No___

Small Generating Facility Certificate of Completion

Is the Small Generating Facility owner-installed? Yes_____ No _____

Interconnection Customer: _____

Contact Person: _____

Address: _____

Location of the Small Generating Facility (if different from above):_____

_____

City: _____ State: ____ Zip Code: _____

Telephone (Day): _____ (Evening): _____

Fax: _____ E-Mail Address: _____

Electrician:

Name: _____

Address: _____

City: _____ State: ____ Zip Code: _____

Telephone (Day): _____ (Evening): _____

Fax: _____ E-Mail Address: _____

License number: _____

Date Approval to Install Facility granted by the Company: _____

Application ID number: _____

Inspection:

The Small Generating Facility has been installed and inspected in compliance with the local building/electrical code of _____

Signed (Local electrical wiring inspector, or attach signed electrical inspection):

_____

Print Name: _____

Date: _____

As a condition of interconnection, you are required to send/fax a copy of this form along with a copy of the signed electrical permit to (insert Company information below):

Name: _____

Company: _____

Address:_____

_____

City, State, ZIP: _____

Fax: _____

.....

Approval to Energize the Small Generating Facility (For Company use only)

Energizing the Small Generating Facility is approved contingent upon the Terms and Conditions for Interconnecting an Inverter-Based Small Generating Facility No Larger than 10kW

Company Signature: _____

Title: _____ Date: _____

Terms and Conditions for Interconnecting an Inverter-Based Small Generating Facility No Larger than 10kW

1.0 **Construction of the Facility**

The Interconnection Customer (the "Customer") may proceed to construct (including operational testing not to exceed two hours) the Small Generating Facility when the Transmission Provider (the "Company") approves the Interconnection Request (the "Application") and returns it to the Customer.

2.0 **Interconnection and Operation**

The Customer may operate Small Generating Facility and interconnect with the Company's electric system once all of the following have occurred:

2.1 Upon completing construction, the Customer will cause the Small Generating Facility to be inspected or otherwise certified by the appropriate local electrical wiring inspector with jurisdiction, and

2.2 The Customer returns the Certificate of Completion to the Company, and

2.3 The Company has either:

2.3.1 Completed its inspection of the Small Generating Facility to ensure that all equipment has been appropriately installed and that all electrical connections have been made in accordance with applicable codes. All inspections must be conducted by the Company, at its own expense, within ten Business Days after receipt of the Certificate of Completion and shall take place at a time agreeable to the Parties. The Company shall provide a written statement that the Small Generating Facility has passed inspection or shall notify the Customer of what steps it must take to pass inspection as soon as practicable after the inspection takes place; or

2.3.2 If the Company does not schedule an inspection of the Small Generating Facility within ten business days after receiving the Certificate of Completion, the witness test is deemed waived (unless the Parties agree otherwise); or

2.3.3 The Company waives the right to inspect the Small Generating Facility.

2.4 The Company has the right to disconnect the Small Generating Facility in the event of improper installation or failure to return the Certificate of Completion.

2.5 Revenue quality metering equipment must be installed and tested in accordance with applicable ANSI standards.

3.0 **Safe Operations and Maintenance**

The Customer shall be fully responsible to operate, maintain, and repair the Small Generating Facility as required to ensure that it complies at all times with the interconnection standards to which it has been certified.

4.0 **Access**

The Company shall have access to the disconnect switch (if the disconnect switch is required) and metering equipment of the Small Generating Facility at all times. The Company shall provide reasonable notice to the Customer when possible prior to using its right of access.

5.0 **Disconnection**

The Company may temporarily disconnect the Small Generating Facility upon the following conditions:

5.1 For scheduled outages upon reasonable notice.

5.2 For unscheduled outages or emergency conditions.

5.3 If the Small Generating Facility does not operate in the manner consistent with these Terms and Conditions.

5.4 The Company shall inform the Customer in advance of any scheduled disconnection, or as is reasonable after an unscheduled disconnection.

6.0 **Indemnification**

The Parties shall at all times indemnify, defend, and save the other Party harmless from, any and all damages, losses, claims, including claims and actions relating to injury to or death of any person or damage to property, demand, suits, recoveries, costs and expenses, court costs, attorney fees, and all other obligations by or to third parties, arising out of or resulting from the other Party's action or inactions of its obligations under this agreement on behalf of the indemnifying Party, except in cases of gross negligence or intentional wrongdoing by the indemnified Party.

7.0 **Insurance**

The Parties agree to follow all applicable insurance requirements imposed by the state in which the Point of Interconnection is located. All insurance policies must be maintained with insurers authorized to do business in that state.

8.0 **Limitation of Liability**

Each party’s liability to the other party for any loss, cost, claim, injury, liability, or expense, including reasonable attorney’s fees, relating to or arising from any act or omission in its performance of this Agreement, shall be limited to the amount of direct damage actually incurred. In no event shall either party be liable to the other party for any indirect, incidental, special, consequential, or punitive damages of any kind whatsoever, except as allowed under paragraph 6.0.

9.0 **Termination**

The agreement to operate in parallel may be terminated under the following conditions:

9.1 **By the Customer**

By providing written notice to the Company.

9.2 **By the Company**

If the Small Generating Facility fails to operate for any consecutive 12 month period or the Customer fails to remedy a violation of these Terms and Conditions.

9.3 **Permanent Disconnection**

In the event this Agreement is terminated, the Company shall have the right to disconnect its facilities or direct the Customer to disconnect its Small Generating Facility.

9.4 **Survival Rights**

This Agreement shall continue in effect after termination to the extent necessary to allow or require either Party to fulfill rights or obligations that arose under the Agreement.

10.0 **Assignment/Transfer of Ownership of the Facility**

This Agreement shall survive the transfer of ownership of the Small Generating Facility to a new owner when the new owner agrees in writing to comply with the terms of this Agreement and so notifies the Company.

Attachment 6

Feasibility Study Agreement

THIS AGREEMENT is made and entered into this_____day of_____20___

by and between_____,

a_____organized and existing under the laws of the State

of_____, ("Interconnection Customer,") and

_____, a_____

existing under the laws of the State of_____,

("Transmission Provider"). Interconnection Customer and Transmission Provider each may be referred to as a "Party," or collectively as the "Parties."

RECITALS

WHEREAS, Interconnection Customer is proposing to develop a Small Generating Facility or generating capacity addition to an existing Small Generating Facility consistent with the Interconnection Request completed by Interconnection Customer on _____; and

WHEREAS, Interconnection Customer desires to interconnect the Small Generating Facility with the Transmission Provider's Transmission System; and

WHEREAS, Interconnection Customer has requested the Transmission Provider to perform a feasibility study to assess the feasibility of interconnecting the proposed Small Generating Facility with the Transmission Provider's Transmission System, and of any Affected Systems;

NOW, THEREFORE, in consideration of and subject to the mutual covenants contained herein the Parties agreed as follows:

1.0 When used in this Agreement, with initial capitalization, the terms specified shall have the meanings indicated or the meanings specified in the standard Small Generator Interconnection Procedures.

2.0 The Interconnection Customer elects and the Transmission Provider shall cause to be performed an interconnection feasibility study consistent the standard Small Generator Interconnection Procedures in accordance with the Open Access Transmission Tariff.

3.0 The scope of the feasibility study shall be subject to the assumptions set forth in Attachment A to this Agreement.

4.0 The feasibility study shall be based on the technical information provided by the Interconnection Customer in the Interconnection Request, as may be modified as the result of the scoping meeting. The Transmission Provider reserves the right to request additional technical information from the Interconnection Customer as may reasonably become

necessary consistent with Good Utility Practice during the course of the feasibility study and as designated in accordance with the standard Small Generator Interconnection Procedures. If the Interconnection Customer modifies its Interconnection Request, the time to complete the feasibility study may be extended by agreement of the Parties.

5.0 In performing the study, the Transmission Provider shall rely, to the extent reasonably practicable, on existing studies of recent vintage. The Interconnection Customer shall not be charged for such existing studies; however, the Interconnection Customer shall be responsible for charges associated with any new study or modifications to existing studies that are reasonably necessary to perform the feasibility study.

6.0 The feasibility study report shall provide the following analyses for the purpose of identifying any potential adverse system impacts that would result from the interconnection of the Small Generating Facility as proposed:

6.1 Initial identification of any circuit breaker short circuit capability limits exceeded as a result of the interconnection;

6.2 Initial identification of any thermal overload or voltage limit violations resulting from the interconnection;

6.3 Initial review of grounding requirements and electric system protection; and

6.4 Description and non-binding estimated cost of facilities required to interconnect the proposed Small Generating Facility and to address the identified short circuit and power flow issues.

7.0 The feasibility study shall model the impact of the Small Generating Facility regardless of purpose in order to avoid the further expense and interruption of operation for reexamination of feasibility and impacts if the Interconnection Customer later changes the purpose for which the Small Generating Facility is being installed.

8.0 The study shall include the feasibility of any interconnection at a proposed project site where there could be multiple potential Points of Interconnection, as requested by the Interconnection Customer and at the Interconnection Customer's cost.

9.0 A deposit of the lesser of 50 percent of good faith estimated feasibility study costs or earnest money of $1,000 may be required from the Interconnection Customer.

10.0 Once the feasibility study is completed, a feasibility study report shall be prepared and transmitted to the Interconnection Customer. Barring unusual circumstances, the feasibility study must be completed and the feasibility study report transmitted within 30 Business Days of the Interconnection Customer's agreement to conduct a feasibility study.

11.0 Any study fees shall be based on the Transmission Provider's actual costs and will be invoiced to the Interconnection Customer after the study is completed and delivered and will include a summary of professional time.

12.0 The Interconnection Customer must pay any study costs that exceed the deposit without interest within 30 calendar days on receipt of the invoice or resolution of any dispute. If the

deposit exceeds the invoiced fees, the Transmission Provider shall refund such excess within 30 calendar days of the invoice without interest.

13.0 Governing Law, Regulatory Authority, and Rules

The validity, interpretation and enforcement of this Agreement and each of its provisions shall be governed by the laws of the state of _____ (where the Point of Interconnection is located), without regard to its conflicts of law principles. This Agreement is subject to all Applicable Laws and Regulations. Each Party expressly reserves the right to seek changes in, appeal, or otherwise contest any laws, orders, or regulations of a Governmental Authority.

14.0 Amendment

The Parties may amend this Agreement by a written instrument duly executed by both Parties.

15.0 No Third-Party Beneficiaries

This Agreement is not intended to and does not create rights, remedies, or benefits of any character whatsoever in favor of any persons, corporations, associations, or entities other than the Parties, and the obligations herein assumed are solely for the use and benefit of the Parties, their successors in interest and where permitted, their assigns.

16.0 Waiver

16.1 The failure of a Party to this Agreement to insist, on any occasion, upon strict performance of any provision of this Agreement will not be considered a waiver of any obligation, right, or duty of, or imposed upon, such Party.

16.2 Any waiver at any time by either Party of its rights with respect to this Agreement shall not be deemed a continuing waiver or a waiver with respect to any other failure to comply with any other obligation, right, duty of this Agreement. Termination or default of this Agreement for any reason by Interconnection Customer shall not constitute a waiver of the Interconnection Customer's legal rights to obtain an interconnection from the Transmission Provider. Any waiver of this Agreement shall, if requested, be provided in writing.

17.0 Multiple Counterparts

This Agreement may be executed in two or more counterparts, each of which is deemed an original but all constitute one and the same instrument.

18.0 No Partnership

This Agreement shall not be interpreted or construed to create an association, joint venture, agency relationship, or partnership between the Parties or to impose any partnership obligation or partnership liability upon either Party. Neither Party shall have any right, power or authority to enter into any agreement or undertaking for, or act on behalf of, or to act as or be an agent or representative of, or to otherwise bind, the other Party.

19.0 Severability

If any provision or portion of this Agreement shall for any reason be held or adjudged to be invalid or illegal or unenforceable by any court of competent jurisdiction or other Governmental Authority, (1) such portion or provision shall be deemed separate and independent, (2) the Parties shall negotiate in good faith to restore insofar as practicable the benefits to each Party that were affected by such ruling, and (3) the remainder of this Agreement shall remain in full force and effect.

20.0 Subcontractors

Nothing in this Agreement shall prevent a Party from utilizing the services of any subcontractor as it deems appropriate to perform its obligations under this Agreement; provided, however, that each Party shall require its subcontractors to comply with all applicable terms and conditions of this Agreement in providing such services and each Party shall remain primarily liable to the other Party for the performance of such subcontractor.

20.1 The creation of any subcontract relationship shall not relieve the hiring Party of any of its obligations under this Agreement. The hiring Party shall be fully responsible to the other Party for the acts or omissions of any subcontractor the hiring Party hires as if no subcontract had been made; provided, however, that in no event shall the Transmission Provider be liable for the actions or inactions of the Interconnection Customer or its subcontractors with respect to obligations of the Interconnection Customer under this Agreement. Any applicable obligation imposed by this Agreement upon the hiring Party shall be equally binding upon, and shall be construed as having application to, any subcontractor of such Party.

20.2 The obligations under this article will not be limited in any way by any limitation of subcontractor’s insurance.

21.0 Reservation of Rights

The Transmission Provider shall have the right to make a unilateral filing with FERC to modify this Agreement with respect to any rates, terms and conditions, charges, classifications of service, rule or regulation under section 205 or any other applicable provision of the Federal Power Act and FERC's rules and regulations thereunder, and the Interconnection Customer shall have the right to make a unilateral filing with FERC to modify this Agreement under any applicable provision of the Federal Power Act and FERC's rules and regulations; provided that each Party shall have the right to protest any such filing by the other Party and to participate fully in any proceeding before FERC in which such modifications may be considered. Nothing in this Agreement shall limit the rights of the Parties or of FERC under sections 205 or 206 of the Federal Power Act and FERC's rules and regulations, except to the extent that the Parties otherwise agree as provided herein.

IN WITNESS WHEREOF, the Parties have caused this Agreement to be duly executed by their duly authorized officers or agents on the day and year first above written.

[Insert name of Transmission Provider]	**[Insert name of Interconnection Customer]**
_____	_____

Signed _____

Name (Printed):

_____

Title: _____

Signed _____

Name (Printed):

_____

Title: _____

Attachment A to
Feasibility Study Agreement

Assumptions Used in Conducting the Feasibility Study

The feasibility study will be based upon the information set forth in the Interconnection Request and agreed upon in the scoping meeting held on _____:

1) Designation of Point of Interconnection and configuration to be studied.

2) Designation of alternative Points of Interconnection and configuration.

1) and 2) are to be completed by the Interconnection Customer. Other assumptions (listed below) are to be provided by the Interconnection Customer and the Transmission Provider.

Attachment 7

System Impact Study Agreement

THIS AGREEMENT is made and entered into this_____day of_____20___

by and between_____,

a_____organized and existing under the laws of the State

of_____, ("Interconnection Customer,") and

_____, a_____

existing under the laws of the State of_____,

("Transmission Provider"). Interconnection Customer and Transmission Provider each may be referred to as a "Party," or collectively as the "Parties."

RECITALS

WHEREAS, the Interconnection Customer is proposing to develop a Small Generating Facility or generating capacity addition to an existing Small Generating Facility consistent with the Interconnection Request completed by the Interconnection Customer on_____; and

WHEREAS, the Interconnection Customer desires to interconnect the Small Generating Facility with the Transmission Provider's Transmission System;

WHEREAS, the Transmission Provider has completed a feasibility study and provided the results of said study to the Interconnection Customer (This recital to be omitted if the Parties have agreed to forego the feasibility study.); and

WHEREAS, the Interconnection Customer has requested the Transmission Provider to perform a system impact study(s) to assess the impact of interconnecting the Small Generating Facility with the Transmission Provider's Transmission System, and of any Affected Systems;

NOW, THEREFORE, in consideration of and subject to the mutual covenants contained herein the Parties agreed as follows:

1.0 When used in this Agreement, with initial capitalization, the terms specified shall have the meanings indicated or the meanings specified in the standard Small Generator Interconnection Procedures.

2.0 The Interconnection Customer elects and the Transmission Provider shall cause to be performed a system impact study(s) consistent with the standard Small Generator Interconnection Procedures in accordance with the Open Access Transmission Tariff.

3.0 The scope of a system impact study shall be subject to the assumptions set forth in Attachment A to this Agreement.

4.0 A system impact study will be based upon the results of the feasibility study and the technical information provided by Interconnection Customer in the Interconnection Request. The Transmission Provider reserves the right to request additional technical information from the Interconnection Customer as may reasonably become necessary consistent with Good Utility Practice during the course of the system impact study. If the Interconnection Customer modifies its designated Point of Interconnection, Interconnection Request, or the technical information provided therein is modified, the time to complete the system impact study may be extended.

5.0 A system impact study shall consist of a short circuit analysis, a stability analysis, a power flow analysis, voltage drop and flicker studies, protection and set point coordination studies, and grounding reviews, as necessary. A system impact study shall state the assumptions upon which it is based, state the results of the analyses, and provide the requirement or potential impediments to providing the requested interconnection service, including a preliminary indication of the cost and length of time that would be necessary to correct any problems identified in those analyses and implement the interconnection. A system impact study shall provide a list of facilities that are required as a result of the Interconnection Request and non-binding good faith estimates of cost responsibility and time to construct.

6.0 A distribution system impact study shall incorporate a distribution load flow study, an analysis of equipment interrupting ratings, protection coordination study, voltage drop and flicker studies, protection and set point coordination studies, grounding reviews, and the impact on electric system operation, as necessary.

7.0 Affected Systems may participate in the preparation of a system impact study, with a division of costs among such entities as they may agree. All Affected Systems shall be afforded an opportunity to review and comment upon a system impact study that covers potential adverse system impacts on their electric systems, and the Transmission Provider has 20 additional Business Days to complete a system impact study requiring review by Affected Systems.

8.0 If the Transmission Provider uses a queuing procedure for sorting or prioritizing projects and their associated cost responsibilities for any required Network Upgrades, the system impact study shall consider all generating facilities (and with respect to paragraph 8.3 below, any identified Upgrades associated with such higher queued interconnection) that, on the date the system impact study is commenced –

8.1 Are directly interconnected with the Transmission Provider's electric system; or

8.2 Are interconnected with Affected Systems and may have an impact on the proposed interconnection; and

8.3 Have a pending higher queued Interconnection Request to interconnect with the Transmission Provider's electric system.

9.0 A distribution system impact study, if required, shall be completed and the results transmitted to the Interconnection Customer within 30 Business Days after this Agreement is signed by the Parties. A transmission system impact study, if required, shall be completed and the results transmitted to the Interconnection Customer within 45 Business

Days after this Agreement is signed by the Parties, or in accordance with the Transmission Provider's queuing procedures.

10.0 A deposit of the equivalent of the good faith estimated cost of a distribution system impact study and the one half the good faith estimated cost of a transmission system impact study may be required from the Interconnection Customer.

11.0 Any study fees shall be based on the Transmission Provider's actual costs and will be invoiced to the Interconnection Customer after the study is completed and delivered and will include a summary of professional time.

12.0 The Interconnection Customer must pay any study costs that exceed the deposit without interest within 30 calendar days on receipt of the invoice or resolution of any dispute. If the deposit exceeds the invoiced fees, the Transmission Provider shall refund such excess within 30 calendar days of the invoice without interest.

13.0 Governing Law, Regulatory Authority, and Rules

The validity, interpretation and enforcement of this Agreement and each of its provisions shall be governed by the laws of the state of _____ (where the Point of Interconnection is located), without regard to its conflicts of law principles. This Agreement is subject to all Applicable Laws and Regulations. Each Party expressly reserves the right to seek changes in, appeal, or otherwise contest any laws, orders, or regulations of a Governmental Authority.

14.0 Amendment

The Parties may amend this Agreement by a written instrument duly executed by both Parties.

15.0 No Third-Party Beneficiaries

This Agreement is not intended to and does not create rights, remedies, or benefits of any character whatsoever in favor of any persons, corporations, associations, or entities other than the Parties, and the obligations herein assumed are solely for the use and benefit of the Parties, their successors in interest and where permitted, their assigns.

16.0 Waiver

16.1 The failure of a Party to this Agreement to insist, on any occasion, upon strict performance of any provision of this Agreement will not be considered a waiver of any obligation, right, or duty of, or imposed upon, such Party.

16.2 Any waiver at any time by either Party of its rights with respect to this Agreement shall not be deemed a continuing waiver or a waiver with respect to any other failure to comply with any other obligation, right, duty of this Agreement. Termination or default of this Agreement for any reason by Interconnection Customer shall not constitute a waiver of the Interconnection Customer's legal rights to obtain an interconnection from the Transmission Provider. Any waiver of this Agreement shall, if requested, be provided in writing.

17.0 Multiple Counterparts

This Agreement may be executed in two or more counterparts, each of which is deemed an original but all constitute one and the same instrument.

18.0 No Partnership

This Agreement shall not be interpreted or construed to create an association, joint venture, agency relationship, or partnership between the Parties or to impose any partnership obligation or partnership liability upon either Party. Neither Party shall have any right, power or authority to enter into any agreement or undertaking for, or act on behalf of, or to act as or be an agent or representative of, or to otherwise bind, the other Party.

19.0 Severability

If any provision or portion of this Agreement shall for any reason be held or adjudged to be invalid or illegal or unenforceable by any court of competent jurisdiction or other Governmental Authority, (1) such portion or provision shall be deemed separate and independent, (2) the Parties shall negotiate in good faith to restore insofar as practicable the benefits to each Party that were affected by such ruling, and (3) the remainder of this Agreement shall remain in full force and effect.

20.0 Subcontractors

Nothing in this Agreement shall prevent a Party from utilizing the services of any subcontractor as it deems appropriate to perform its obligations under this Agreement; provided, however, that each Party shall require its subcontractors to comply with all applicable terms and conditions of this Agreement in providing such services and each Party shall remain primarily liable to the other Party for the performance of such subcontractor.

20.1 The creation of any subcontract relationship shall not relieve the hiring Party of any of its obligations under this Agreement. The hiring Party shall be fully responsible to the other Party for the acts or omissions of any subcontractor the hiring Party hires as if no subcontract had been made; provided, however, that in no event shall the Transmission Provider be liable for the actions or inactions of the Interconnection Customer or its subcontractors with respect to obligations of the Interconnection Customer under this Agreement. Any applicable obligation imposed by this Agreement upon the hiring Party shall be equally binding upon, and shall be construed as having application to, any subcontractor of such Party.

20.2 The obligations under this article will not be limited in any way by any limitation of subcontractor’s insurance.

21.0 Reservation of Rights

The Transmission Provider shall have the right to make a unilateral filing with FERC to modify this Agreement with respect to any rates, terms and conditions, charges, classifications of service, rule or regulation under section 205 or any other applicable provision of the Federal Power Act and FERC's rules and regulations thereunder, and the Interconnection Customer shall have the right to make a unilateral filing with FERC to

modify this Agreement under any applicable provision of the Federal Power Act and FERC's rules and regulations; provided that each Party shall have the right to protest any such filing by the other Party and to participate fully in any proceeding before FERC in which such modifications may be considered. Nothing in this Agreement shall limit the rights of the Parties or of FERC under sections 205 or 206 of the Federal Power Act and FERC's rules and regulations, except to the extent that the Parties otherwise agree as provided herein.

IN WITNESS THEREOF, the Parties have caused this Agreement to be duly executed by their duly authorized officers or agents on the day and year first above written.

[Insert name of Transmission Provider]	**[Insert name of Interconnection Customer]**
_____	_____
Signed _____	Signed _____
Name (Printed):	Name (Printed):
_____	_____
Title: _____	Title: _____

Attachment A to System Impact Study Agreement

Assumptions Used in Conducting the System Impact Study

The system impact study shall be based upon the results of the feasibility study, subject to any modifications in accordance with the standard Small Generator Interconnection Procedures, and the following assumptions:

1) Designation of Point of Interconnection and configuration to be studied.

2) Designation of alternative Points of Interconnection and configuration.

1) and 2) are to be completed by the Interconnection Customer. Other assumptions (listed below) are to be provided by the Interconnection Customer and the Transmission Provider.

Attachment 8

Facilities Study Agreement

THIS AGREEMENT is made and entered into this_____day of_____20___

by and between_____,

a_____organized and existing under the laws of the State

of_____, ("Interconnection Customer,") and

_____, a_____

existing under the laws of the State of_____,

("Transmission Provider"). Interconnection Customer and Transmission Provider each may be referred to as a "Party," or collectively as the "Parties."

RECITALS

WHEREAS, the Interconnection Customer is proposing to develop a Small Generating Facility or generating capacity addition to an existing Small Generating Facility consistent with the Interconnection Request completed by the Interconnection Customer on_____; and

WHEREAS, the Interconnection Customer desires to interconnect the Small Generating Facility with the Transmission Provider's Transmission System;

WHEREAS, the Transmission Provider has completed a system impact study and provided the results of said study to the Interconnection Customer; and

WHEREAS, the Interconnection Customer has requested the Transmission Provider to perform a facilities study to specify and estimate the cost of the equipment, engineering, procurement and construction work needed to implement the conclusions of the system impact study in accordance with Good Utility Practice to physically and electrically connect the Small Generating Facility with the Transmission Provider's Transmission System.

NOW, THEREFORE, in consideration of and subject to the mutual covenants contained herein the Parties agreed as follows:

1.0 When used in this Agreement, with initial capitalization, the terms specified shall have the meanings indicated or the meanings specified in the standard Small Generator Interconnection Procedures.

2.0 The Interconnection Customer elects and the Transmission Provider shall cause a facilities study consistent with the standard Small Generator Interconnection Procedures to be performed in accordance with the Open Access Transmission Tariff.

3.0 The scope of the facilities study shall be subject to data provided in Attachment A to this Agreement.

4.0 The facilities study shall specify and estimate the cost of the equipment, engineering, procurement and construction work (including overheads) needed to implement the conclusions of the system impact study(s). The facilities study shall also identify (1) the electrical switching configuration of the equipment, including, without limitation, transformer, switchgear, meters, and other station equipment, (2) the nature and estimated cost of the Transmission Provider's Interconnection Facilities and Upgrades necessary to accomplish the interconnection, and (3) an estimate of the time required to complete the construction and installation of such facilities.

5.0 The Transmission Provider may propose to group facilities required for more than one Interconnection Customer in order to minimize facilities costs through economies of scale, but any Interconnection Customer may require the installation of facilities required for its own Small Generating Facility if it is willing to pay the costs of those facilities.

6.0 A deposit of the good faith estimated facilities study costs may be required from the Interconnection Customer.

7.0 In cases where Upgrades are required, the facilities study must be completed within 45 Business Days of the receipt of this Agreement. In cases where no Upgrades are necessary, and the required facilities are limited to Interconnection Facilities, the facilities study must be completed within 30 Business Days.

8.0 Once the facilities study is completed, a draft facilities study report shall be prepared and transmitted to the Interconnection Customer. Barring unusual circumstances, the facilities study must be completed and the draft facilities study report transmitted within 30 Business Days of the Interconnection Customer's agreement to conduct a facilities study.

9.0 Interconnection Customer may, within 30 Calendar Days after receipt of the draft report, provide written comments to Transmission Provider, which Transmission Provider shall include in the final report. Transmission Provider shall issue the final Interconnection Facilities Study report within 15 Business Days of receiving Interconnection Customer’s comments or promptly upon receiving Interconnection Customer’s statement that it will not provide comments. Transmission Provider may reasonably extend such fifteen-day period upon notice to Interconnection Customer if Interconnection Customer’s comments require Transmission Provider to perform additional analyses or make other significant modifications prior to the issuance of the final Interconnection Facilities Report. Upon request, Transmission Provider shall provide Interconnection Customer supporting documentation, workpapers, and databases or data developed in the preparation of the Interconnection Facilities Study, subject to confidentiality arrangements consistent with Section 4.5 of the standard Small Generator Interconnection Procedures.

10.0 Within ten Business Days of providing a draft Interconnection Facilities Study report to Interconnection Customer, Transmission Provider and Interconnection Customer shall meet to discuss the results of the Interconnection Facilities Study.

11.0 Any study fees shall be based on the Transmission Provider's actual costs and will be invoiced to the Interconnection Customer after the study is completed and delivered and will include a summary of professional time.

12.0 The Interconnection Customer must pay any study costs that exceed the deposit without interest within 30 calendar days on receipt of the invoice or resolution of any dispute. If the deposit exceeds the invoiced fees, the Transmission Provider shall refund such excess within 30 calendar days of the invoice without interest.

13.0 Governing Law, Regulatory Authority, and Rules
The validity, interpretation and enforcement of this Agreement and each of its provisions shall be governed by the laws of the state of _____ (where the Point of Interconnection is located), without regard to its conflicts of law principles. This Agreement is subject to all Applicable Laws and Regulations. Each Party expressly reserves the right to seek changes in, appeal, or otherwise contest any laws, orders, or regulations of a Governmental Authority.

14.0 Amendment
The Parties may amend this Agreement by a written instrument duly executed by both Parties.

15.0 No Third-Party Beneficiaries
This Agreement is not intended to and does not create rights, remedies, or benefits of any character whatsoever in favor of any persons, corporations, associations, or entities other than the Parties, and the obligations herein assumed are solely for the use and benefit of the Parties, their successors in interest and where permitted, their assigns.

16.0 Waiver

16.1 The failure of a Party to this Agreement to insist, on any occasion, upon strict performance of any provision of this Agreement will not be considered a waiver of any obligation, right, or duty of, or imposed upon, such Party.

16.2 Any waiver at any time by either Party of its rights with respect to this Agreement shall not be deemed a continuing waiver or a waiver with respect to any other failure to comply with any other obligation, right, duty of this Agreement. Termination or default of this Agreement for any reason by Interconnection Customer shall not constitute a waiver of the Interconnection Customer's legal rights to obtain an interconnection from the Transmission Provider. Any waiver of this Agreement shall, if requested, be provided in writing.

17.0 Multiple Counterparts
This Agreement may be executed in two or more counterparts, each of which is deemed an original but all constitute one and the same instrument.

18.0 No Partnership
This Agreement shall not be interpreted or construed to create an association, joint venture, agency relationship, or partnership between the Parties or to impose any

partnership obligation or partnership liability upon either Party. Neither Party shall have any right, power or authority to enter into any agreement or undertaking for, or act on behalf of, or to act as or be an agent or representative of, or to otherwise bind, the other Party.

19.0 Severability

If any provision or portion of this Agreement shall for any reason be held or adjudged to be invalid or illegal or unenforceable by any court of competent jurisdiction or other Governmental Authority, (1) such portion or provision shall be deemed separate and independent, (2) the Parties shall negotiate in good faith to restore insofar as practicable the benefits to each Party that were affected by such ruling, and (3) the remainder of this Agreement shall remain in full force and effect.

20.0 Subcontractors

Nothing in this Agreement shall prevent a Party from utilizing the services of any subcontractor as it deems appropriate to perform its obligations under this Agreement; provided, however, that each Party shall require its subcontractors to comply with all applicable terms and conditions of this Agreement in providing such services and each Party shall remain primarily liable to the other Party for the performance of such subcontractor.

20.1 The creation of any subcontract relationship shall not relieve the hiring Party of any of its obligations under this Agreement. The hiring Party shall be fully responsible to the other Party for the acts or omissions of any subcontractor the hiring Party hires as if no subcontract had been made; provided, however, that in no event shall the Transmission Provider be liable for the actions or inactions of the Interconnection Customer or its subcontractors with respect to obligations of the Interconnection Customer under this Agreement. Any applicable obligation imposed by this Agreement upon the hiring Party shall be equally binding upon, and shall be construed as having application to, any subcontractor of such Party.

20.2 The obligations under this article will not be limited in any way by any limitation of subcontractor’s insurance.

21.0 Reservation of Rights

The Transmission Provider shall have the right to make a unilateral filing with FERC to modify this Agreement with respect to any rates, terms and conditions, charges, classifications of service, rule or regulation under section 205 or any other applicable provision of the Federal Power Act and FERC's rules and regulations thereunder, and the Interconnection Customer shall have the right to make a unilateral filing with FERC to modify this Agreement under any applicable provision of the Federal Power Act and FERC's rules and regulations; provided that each Party shall have the right to protest any such filing by the other Party and to participate fully in any proceeding before FERC in which such modifications may be considered. Nothing in this Agreement shall limit the rights of the Parties or of FERC under sections 205 or 206 of the Federal Power Act and

FERC's rules and regulations, except to the extent that the Parties otherwise agree as provided herein.

IN WITNESS WHEREOF, the Parties have caused this Agreement to be duly executed by their duly authorized officers or agents on the day and year first above written.

[Insert name of Transmission Provider]	**[Insert name of Interconnection Customer]**
_____	_____
Signed_____	Signed_____
Name (Printed):	Name (Printed):
_____	_____
Title: _____	Title: _____

Attachment A to
Facilities Study Agreement

Data to Be Provided by the Interconnection Customer
with the Facilities Study Agreement

Provide location plan and simplified one-line diagram of the plant and station facilities. For staged projects, please indicate future generation, transmission circuits, etc.

On the one-line diagram, indicate the generation capacity attached at each metering location. (Maximum load on CT/PT)

On the one-line diagram, indicate the location of auxiliary power. (Minimum load on CT/PT) Amps

One set of metering is required for each generation connection to the new ring bus or existing Transmission Provider station. Number of generation connections: _____

Will an alternate source of auxiliary power be available during CT/PT maintenance?
Yes_____ No_____

Will a transfer bus on the generation side of the metering require that each meter set be designed for the total plant generation? Yes _____No _____
(Please indicate on the one-line diagram).

What type of control system or PLC will be located at the Small Generating Facility?

_____

_____

What protocol does the control system or PLC use?

_____

_____

Please provide a 7.5-minute quadrangle map of the site. Indicate the plant, station, transmission line, and property lines.

Physical dimensions of the proposed interconnection station:

_____

Bus length from generation to interconnection station:

_____

Line length from interconnection station to Transmission Provider's Transmission System.

_____

Tower number observed in the field. (Painted on tower leg)*:

_____

Number of third party easements required for transmission lines*:

_____

* To be completed in coordination with Transmission Provider.

Is the Small Generating Facility located in Transmission Provider's service area?

Yes_____ No_____ If No, please provide name of local provider:

_____

Please provide the following proposed schedule dates:

Begin Construction	Date: _____
Generator step-up transformers receive back feed power	Date: _____
Generation Testing	Date: _____
Commercial Operation	Date :_____

APPENDIX 1

SMALL GENERATOR
INTERCONNECTION AGREEMENT (SGIA)

(For Generating Facilities No Larger Than 20 MW)

TABLE OF CONTENTS

Article 1. Scope and Limitations of Agreement
- 1.5 Responsibilities of the Parties
- 1.6 Parallel Operation Obligations
- 1.7 Metering
- 1.8 Reactive Power

Article 2. Inspection, Testing, Authorization, and Right of Access
- 2.1 Equipment Testing and Inspection
- 2.2 Authorization Required Prior to Parallel Operation
- 2.3 Right of Access

Article 3. Effective Date, Term, Termination, and Disconnection
- 3.1 Effective Date
- 3.2 Term of Agreement
- 3.3 Termination
- 3.4 Temporary Disconnection
  - 3.4.1 Emergency Conditions
  - 3.4.2 Routine Maintenance, Construction, and Repair
  - 3.4.3 Forced Outages
  - 3.4.4 Adverse Operating Effects
  - 3.4.5 Modification of the Small Generating Facility
  - 3.4.6 Reconnection

Article 4. Cost Responsibility for Interconnection Facilities and Distribution Upgrades
- 4.1 Interconnection Facilities
- 4.2 Distribution Upgrades

Article 5. Cost Responsibility for Network Upgrades
- 5.1 Applicability
- 5.2 Network Upgrades
  - 5.2.1 Repayment of Amounts Advanced for Network Upgrades
- 5.3 Special Provisions for Affected Systems
- 5.4 Rights Under Other Agreements

Article 6. Billing, Payment, Milestones, and Financial Security
- 6.1 Billing and Payment Procedures and Final Accounting
- 6.2 Milestones
- 6.3 Financial Security Arrangements

Article 7. Assignment, Liability, Indemnity, Force Majeure, Consequential Damages, and Default
- 7.1 Assignment
- 7.2 Limitation of Liability
- 7.3 Indemnity
- 7.4 Consequential Damages
- 7.5 Force Majeure
- 7.6 Default

Article 8. Insurance

Article 9. Confidentiality

Article 10. Disputes

Article 11. Taxes

Article 12. Miscellaneous
- 12.1 Governing Law, Regulatory Authority, and Rules
- 12.2 Amendment

12.3 No Third-Party Beneficiaries
12.4 Waiver
12.5 Entire Agreement
12.6 Multiple Counterparts
12.7 No Partnership
12.8 Severability
12.9 Security Arrangements
12.10 Environmental Releases
12.11 Subcontractors
12.12 Reservation of Rights

Article 13. Notices

13.1 General
13.2 Billing and Payment
13.3 Alternative Forms of Notice
13.4 Designated Operating Representative
13.5 Changes to the Notice Information

Article 14. Signatures

Attachment 1 - Glossary of Terms
Attachment 2 - Description and Costs of the Small Generating Facility, Interconnection Facilities, and Metering Equipment
Attachment 3 - One-line Diagram Depicting the Small Generating Facility, Interconnection Facilities, Metering Equipment, and Upgrades
Attachment 4 - Milestones
Attachment 5 - Additional Operating Requirements for the Transmission Provider's Transmission System and Affected Systems Needed to Support the Interconnection Customer’s Needs
Attachment 6 - Transmission Provider's Description of its Upgrades and Best Estimate of Upgrade Costs

This Interconnection Agreement ("Agreement") is made and entered into this _____ day of _____, 20__, by _____ ("Transmission Provider"), and _____ ("Interconnection Customer") each hereinafter sometimes referred to individually as "Party" or both referred to collectively as the "Parties."

Transmission Provider Information

Transmission Provider: _____
Attention: _____
Address: _____
City: _____ State: _____ Zip: _____
Phone: _____ Fax: _____

Interconnection Customer Information

Interconnection Customer: _____
Attention: _____
Address: _____
City: _____ State: _____ Zip: _____
Phone: _____ Fax: _____

Interconnection Customer Application No: _____

In consideration of the mutual covenants set forth herein, the Parties agree as follows:

Article 1. Scope and Limitations of Agreement

1.1 This Agreement shall be used for all Interconnection Requests submitted under the Small Generator Interconnection Procedures (SGIP) except for those submitted under the 10 kW Inverter Process contained in SGIP Attachment 5.

1.2 This Agreement governs the terms and conditions under which the Interconnection Customer's Small Generating Facility will interconnect with, and operate in parallel with, the Transmission Provider's Transmission System.

1.3 This Agreement does not constitute an agreement to purchase or deliver the Interconnection Customer's power. The purchase or delivery of power and other services that the Interconnection Customer may require will be covered under separate agreements, if any. The Interconnection Customer will be responsible for separately making all necessary arrangements (including scheduling) for delivery of electricity with the applicable Transmission Provider.

1.4 Nothing in this Agreement is intended to affect any other agreement between the Transmission Provider and the Interconnection Customer.

1.5 <u>Responsibilities of the Parties</u>

1.5.1 The Parties shall perform all obligations of this Agreement in accordance with all Applicable Laws and Regulations, Operating Requirements, and Good Utility Practice.

1.5.2 The Interconnection Customer shall construct, interconnect, operate and maintain its Small Generating Facility and construct, operate, and maintain its Interconnection Facilities in accordance with the applicable manufacturer's recommended maintenance schedule, and in accordance with this Agreement, and with Good Utility Practice.

1.5.3 The Transmission Provider shall construct, operate, and maintain its Transmission System and Interconnection Facilities in accordance with this Agreement, and with Good Utility Practice.

1.5.4 The Interconnection Customer agrees to construct its facilities or systems in accordance with applicable specifications that meet or exceed those provided by the National Electrical Safety Code, the American National Standards Institute, IEEE, Underwriter's Laboratory, and Operating Requirements in effect at the time of construction and other applicable national and state codes and standards. The Interconnection Customer agrees to design, install, maintain, and operate its Small Generating Facility so as to reasonably minimize the likelihood of a disturbance adversely affecting or impairing the system or equipment of the Transmission Provider or by the applicable system operator(s).

1.5.5 Each Party shall operate, maintain, repair, and inspect, and shall be fully responsible for the facilities that it now or subsequently may own unless otherwise specified in the Attachments to this Agreement. Each Party shall be responsible for the safe installation, maintenance, repair and condition of their respective lines and appurtenances on their respective sides of the point of change of ownership. The Transmission Provider and the Interconnection Customer, as appropriate, shall provide Interconnection Facilities that adequately protect the Transmission Provider's Transmission System, personnel, and other persons from damage and injury. The allocation of responsibility for the design, installation, operation, maintenance and ownership of Interconnection Facilities shall be delineated in the Attachments to this Agreement.

1.5.6 The Transmission Provider shall coordinate with all Affected Systems to support the interconnection.

1.6 Parallel Operation Obligations

Once the Small Generating Facility has been authorized to commence parallel operation, the Interconnection Customer shall abide by all rules and procedures pertaining to the parallel operation of the Small Generating Facility in the applicable control area, including, but not limited to; 1) the rules and procedures concerning the operation of generation set forth in the Tariff or by the system operator for the Transmission Provider's Transmission System and; 2) the Operating Requirements set forth in Attachment 5 of this Agreement.

1.7 Metering

The Interconnection Customer shall be responsible for the Transmission Provider's reasonable and necessary cost for the purchase, installation, operation, maintenance, testing, repair, and replacement of metering and data acquisition equipment specified in Attachments 2 and 3 of this Agreement. The Interconnection Customer's metering (and data acquisition, as required) equipment shall conform to applicable industry rules and Operating Requirements.

1.8 Reactive Power

1.8.1 The Interconnection Customer shall design its Small Generating Facility to maintain a composite power delivery at continuous rated power output at the Point of Interconnection at a power factor within the range of 0.95 leading to 0.95 lagging, unless the Transmission Provider has established different requirements that apply to all similarly situated generators in the control area on a comparable basis. The requirements of this paragraph shall not apply to wind generators.

1.8.2 The Transmission Provider is required to pay the Interconnection Customer for reactive power that the Interconnection Customer provides or absorbs from the Small Generating Facility when the Transmission Provider requests the Interconnection Customer to operate its Small Generating Facility outside the range specified in article 1.8.1. In addition, if the Transmission Provider pays its own or affiliated generators for reactive power service within the specified range, it must also pay the Interconnection Customer.

1.8.3 Payments shall be in accordance with the Interconnection Customer's applicable rate schedule then in effect unless the provision of such service(s) is subject to a regional transmission organization or independent system operator FERC-approved rate schedule. To the extent that no rate schedule is in effect at the time the Interconnection Customer is required to provide or absorb reactive power under this Agreement, the Parties agree to expeditiously file such rate schedule and agree to support any request for waiver of the Commission's prior notice requirement in order to compensate the Interconnection Customer from the time service commenced.

1.9 Capitalized terms used herein shall have the meanings specified in the Glossary of Terms in Attachment 1 or the body of this Agreement.

Article 2. Inspection, Testing, Authorization, and Right of Access

2.1 Equipment Testing and Inspection

2.1.1 The Interconnection Customer shall test and inspect its Small Generating Facility and Interconnection Facilities prior to interconnection. The Interconnection Customer shall notify the Transmission Provider of such activities no fewer than five Business Days (or as may be agreed to by the Parties) prior to such testing and inspection. Testing and inspection shall occur on a Business Day. The Transmission Provider may, at its own expense, send qualified personnel to the Small Generating Facility site to inspect the interconnection and observe the testing. The Interconnection Customer shall provide the Transmission Provider a written test report when such testing and inspection is completed.

2.1.2 The Transmission Provider shall provide the Interconnection Customer written acknowledgment that it has received the Interconnection Customer's written test report. Such written acknowledgment shall not be deemed to be or construed as any representation, assurance, guarantee, or warranty by the Transmission Provider of the safety, durability, suitability, or reliability of the Small Generating Facility or any associated control, protective, and safety devices owned or

controlled by the Interconnection Customer or the quality of power produced by the Small Generating Facility.

2.2 Authorization Required Prior to Parallel Operation

2.2.1 The Transmission Provider shall use Reasonable Efforts to list applicable parallel operation requirements in Attachment 5 of this Agreement. Additionally, the Transmission Provider shall notify the Interconnection Customer of any changes to these requirements as soon as they are known. The Transmission Provider shall make Reasonable Efforts to cooperate with the Interconnection Customer in meeting requirements necessary for the Interconnection Customer to commence parallel operations by the in-service date.

2.2.2 The Interconnection Customer shall not operate its Small Generating Facility in parallel with the Transmission Provider's Transmission System without prior written authorization of the Transmission Provider. The Transmission Provider will provide such authorization once the Transmission Provider receives notification that the Interconnection Customer has complied with all applicable parallel operation requirements. Such authorization shall not be unreasonably withheld, conditioned, or delayed.

2.3 Right of Access

2.3.1 Upon reasonable notice, the Transmission Provider may send a qualified person to the premises of the Interconnection Customer at or immediately before the time the Small Generating Facility first produces energy to inspect the interconnection, and observe the commissioning of the Small Generating Facility (including any required testing), startup, and operation for a period of up to three Business Days after initial start-up of the unit. In addition, the Interconnection Customer shall notify the Transmission Provider at least five Business Days prior to conducting any on-site verification testing of the Small Generating Facility.

2.3.2 Following the initial inspection process described above, at reasonable hours, and upon reasonable notice, or at any time without notice in the event of an emergency or hazardous condition, the Transmission Provider shall have access to the Interconnection Customer's premises for any reasonable purpose in connection with the performance of the obligations imposed on it by this Agreement or if necessary to meet its legal obligation to provide service to its customers.

2.3.3 Each Party shall be responsible for its own costs associated with following this article.

Article 3. Effective Date, Term, Termination, and Disconnection

3.1 Effective Date

This Agreement shall become effective upon execution by the Parties subject to acceptance by FERC (if applicable), or if filed unexecuted, upon the date specified by the FERC. The Transmission Provider shall promptly file this Agreement with the FERC upon execution, if required.

3.2 Term of Agreement

This Agreement shall become effective on the Effective Date and shall remain in effect for a period of ten years from the Effective Date or such other longer period as the Interconnection Customer may request and shall be automatically renewed for each successive one-year period thereafter, unless terminated earlier in accordance with article 3.3 of this Agreement.

3.3 Termination

No termination shall become effective until the Parties have complied with all Applicable Laws and Regulations applicable to such termination, including the filing with FERC of a notice of termination of this Agreement (if required), which notice has been accepted for filing by FERC.

3.3.1 The Interconnection Customer may terminate this Agreement at any time by giving the Transmission Provider 20 Business Days written notice.

3.3.2 Either Party may terminate this Agreement after Default pursuant to article 7.6.

3.3.3 Upon termination of this Agreement, the Small Generating Facility will be disconnected from the Transmission Provider's Transmission System. All costs required to effectuate such disconnection shall be bore by the terminating Party, unless such termination resulted from the non-terminating Party's Default of this SGIA or such non-terminating Party otherwise is responsible for these costs under this SGIA.

3.3.4 The termination of this Agreement shall not relieve either Party of its liabilities and obligations, owed or continuing at the time of the termination.

3.3.5 The provisions of this article shall survive termination or expiration of this Agreement.

3.4 Temporary Disconnection

Temporary disconnection shall continue only for so long as reasonably necessary under Good Utility Practice.

3.4.1 Emergency Conditions -- "Emergency Condition" shall mean a condition or situation: (1) that in the judgment of the Party making the claim is imminently likely to endanger life or property; or (2) that, in the case of the Transmission Provider, is imminently likely (as determined in a non-discriminatory manner) to cause a material adverse effect on the security of, or damage to the Transmission System, the Transmission Provider's Interconnection Facilities or the Transmission Systems of others to which the Transmission System is directly connected; or (3) that, in the case of the Interconnection Customer, is imminently likely (as determined in a non-discriminatory manner) to cause a material adverse effect on the security of, or damage to, the Small Generating Facility or the Interconnection Customer's Interconnection Facilities. Under Emergency Conditions, the Transmission Provider may immediately suspend interconnection service and temporarily disconnect the Small Generating Facility. The Transmission Provider shall notify the Interconnection Customer promptly when it becomes aware of an Emergency Condition that may reasonably be expected to affect the Interconnection Customer's operation of the Small Generating Facility.

The Interconnection Customer shall notify the Transmission Provider promptly when it becomes aware of an Emergency Condition that may reasonably be expected to affect the Transmission Provider's Transmission System or any Affected Systems. To the extent information is known, the notification shall describe the Emergency Condition, the extent of the damage or deficiency, the expected effect on the operation of both Parties' facilities and operations, its anticipated duration, and the necessary corrective action.

3.4.2 Routine Maintenance, Construction, and Repair

The Transmission Provider may interrupt interconnection service or curtail the output of the Small Generating Facility and temporarily disconnect the Small Generating Facility from the Transmission Provider's Transmission System when necessary for routine maintenance, construction, and repairs on the Transmission Provider's Transmission System. The Transmission Provider shall provide the Interconnection Customer with five Business Days notice prior to such interruption. The Transmission Provider shall use Reasonable Efforts to coordinate such reduction or temporary disconnection with the Interconnection Customer.

3.4.3 Forced Outages

During any forced outage, the Transmission Provider may suspend interconnection service to effect immediate repairs on the Transmission Provider's Transmission System. The Transmission Provider shall use Reasonable Efforts to provide the Interconnection Customer with prior notice. If prior notice is not given, the Transmission Provider shall, upon request, provide the Interconnection Customer written documentation after the fact explaining the circumstances of the disconnection.

3.4.4 Adverse Operating Effects

The Transmission Provider shall notify the Interconnection Customer as soon as practicable if, based on Good Utility Practice, operation of the Small Generating Facility may cause disruption or deterioration of service to other customers served from the same electric system, or if operating the Small Generating Facility could cause damage to the Transmission Provider's Transmission System or Affected Systems. Supporting documentation used to reach the decision to disconnect shall be provided to the Interconnection Customer upon request. If, after notice, the Interconnection Customer fails to remedy the adverse operating effect within a reasonable time, the Transmission Provider may disconnect the Small Generating Facility. The Transmission Provider shall provide the Interconnection Customer with five Business Day notice of such disconnection, unless the provisions of article 3.4.1 apply.

3.4.5 Modification of the Small Generating Facility

The Interconnection Customer must receive written authorization from the Transmission Provider before making any change to the Small Generating Facility that may have a material impact on the safety or reliability of the Transmission System. Such authorization shall not be unreasonably withheld. Modifications shall be done in accordance with Good Utility Practice. If the Interconnection Customer makes such modification without the Transmission Provider's prior written authorization, the latter shall have the right to temporarily disconnect the Small Generating Facility.

3.4.6 Reconnection
The Parties shall cooperate with each other to restore the Small Generating Facility, Interconnection Facilities, and the Transmission Provider's Transmission System to their normal operating state as soon as reasonably practicable following a temporary disconnection.

Article 4. Cost Responsibility for Interconnection Facilities and Distribution Upgrades

4.1 Interconnection Facilities

4.1.1 The Interconnection Customer shall pay for the cost of the Interconnection Facilities itemized in Attachment 2 of this Agreement. The Transmission Provider shall provide a best estimate cost, including overheads, for the purchase and construction of its Interconnection Facilities and provide a detailed itemization of such costs. Costs associated with Interconnection Facilities may be shared with other entities that may benefit from such facilities by agreement of the Interconnection Customer, such other entities, and the Transmission Provider.

4.1.2 The Interconnection Customer shall be responsible for its share of all reasonable expenses, including overheads, associated with (1) owning, operating, maintaining, repairing, and replacing its own Interconnection Facilities, and (2) operating, maintaining, repairing, and replacing the Transmission Provider's Interconnection Facilities.

4.2 Distribution Upgrades
The Transmission Provider shall design, procure, construct, install, and own the Distribution Upgrades described in Attachment 6 of this Agreement. If the Transmission Provider and the Interconnection Customer agree, the Interconnection Customer may construct Distribution Upgrades that are located on land owned by the Interconnection Customer. The actual cost of the Distribution Upgrades, including overheads, shall be directly assigned to the Interconnection Customer.

Article 5. Cost Responsibility for Network Upgrades

5.1 Applicability
No portion of this article 5 shall apply unless the interconnection of the Small Generating Facility requires Network Upgrades.

5.2 Network Upgrades
The Transmission Provider or the Transmission Owner shall design, procure, construct, install, and own the Network Upgrades described in Attachment 6 of this Agreement. If the Transmission Provider and the Interconnection Customer agree, the Interconnection Customer may construct Network Upgrades that are located on land owned by the Interconnection Customer. Unless the Transmission Provider elects to pay for Network Upgrades, the actual cost of the Network Upgrades, including overheads, shall be borne initially by the Interconnection Customer.

5.2.1 Repayment of Amounts Advanced for Network Upgrades
The Interconnection Customer shall be entitled to a cash repayment, equal to the total amount paid to the Transmission Provider and Affected System operator, if

any, for Network Upgrades, including any tax gross-up or other tax-related payments associated with the Network Upgrades, and not otherwise refunded to the Interconnection Customer, to be paid to the Interconnection Customer on a dollar-for-dollar basis for the non-usage sensitive portion of transmission charges, as payments are made under the Transmission Provider's Tariff and Affected System's Tariff for transmission services with respect to the Small Generating Facility. Any repayment shall include interest calculated in accordance with the methodology set forth in FERC's regulations at 18 C.F.R. § 35.19a(a)(2)(iii) from the date of any payment for Network Upgrades through the date on which the Interconnection Customer receives a repayment of such payment pursuant to this subparagraph. The Interconnection Customer may assign such repayment rights to any person.

5.2.1.1 Notwithstanding the foregoing, the Interconnection Customer, the Transmission Provider, and any applicable Affected System operator may adopt any alternative payment schedule that is mutually agreeable so long as the Transmission Provider and said Affected System operator take one of the following actions no later than five years from the Commercial Operation Date: (1) return to the Interconnection Customer any amounts advanced for Network Upgrades not previously repaid, or (2) declare in writing that the Transmission Provider or any applicable Affected System operator will continue to provide payments to the Interconnection Customer on a dollar-for-dollar basis for the non-usage sensitive portion of transmission charges, or develop an alternative schedule that is mutually agreeable and provides for the return of all amounts advanced for Network Upgrades not previously repaid; however, full reimbursement shall not extend beyond twenty (20) years from the commercial operation date.

5.2.1.2 If the Small Generating Facility fails to achieve commercial operation, but it or another generating facility is later constructed and requires use of the Network Upgrades, the Transmission Provider and Affected System operator shall at that time reimburse the Interconnection Customer for the amounts advanced for the Network Upgrades. Before any such reimbursement can occur, the Interconnection Customer, or the entity that ultimately constructs the generating facility, if different, is responsible for identifying the entity to which reimbursement must be made.

5.3 Special Provisions for Affected Systems

Unless the Transmission Provider provides, under this Agreement, for the repayment of amounts advanced to any applicable Affected System operator for Network Upgrades, the Interconnection Customer and Affected System operator shall enter into an agreement that provides for such repayment. The agreement shall specify the terms governing payments to be made by the Interconnection Customer to Affected System operator as well as the repayment by Affected System operator.

5.4 Rights Under Other Agreements

Notwithstanding any other provision of this Agreement, nothing herein shall be construed as relinquishing or foreclosing any rights, including but not limited to firm transmission rights, capacity rights, transmission congestion rights, or transmission credits, that the Interconnection Customer shall be entitled to, now or in the future, under any other agreement or tariff as a result of, or otherwise associated with, the transmission capacity, if any, created by the Network Upgrades, including the right to obtain cash reimbursements

or transmission credits for transmission service that is not associated with the Small Generating Facility.

Article 6. Billing, Payment, Milestones, and Financial Security

6.1 Billing and Payment Procedures and Final Accounting

6.1.1 The Transmission Provider shall bill the Interconnection Customer for the design, engineering, construction, and procurement costs of Interconnection Facilities and Upgrades contemplated by this Agreement on a monthly basis, or as otherwise agreed by the Parties. The Interconnection Customer shall pay each bill within 30 calendar days of receipt, or as otherwise agreed to by the Parties.

6.1.2 Within three months of completing the construction and installation of the Transmission Provider's Interconnection Facilities and/or Upgrades described in the Attachments to this Agreement, the Transmission Provider shall provide the Interconnection Customer with a final accounting report of any difference between (1) the Interconnection Customer's cost responsibility for the actual cost of such facilities or Upgrades, and (2) the Interconnection Customer's previous aggregate payments to the Transmission Provider for such facilities or Upgrades. If the Interconnection Customer's cost responsibility exceeds its previous aggregate payments, the Transmission Provider shall invoice the Interconnection Customer for the amount due and the Interconnection Customer shall make payment to the Transmission Provider within 30 calendar days. If the Interconnection Customer's previous aggregate payments exceed its cost responsibility under this Agreement, the Transmission Provider shall refund to the Interconnection Customer an amount equal to the difference within 30 calendar days of the final accounting report.

6.2 Milestones

The Parties shall agree on milestones for which each Party is responsible and list them in Attachment 4 of this Agreement. A Party's obligations under this provision may be extended by agreement. If a Party anticipates that it will be unable to meet a milestone for any reason other than a Force Majeure Event, it shall immediately notify the other Party of the reason(s) for not meeting the milestone and (1) propose the earliest reasonable alternate date by which it can attain this and future milestones, and (2) requesting appropriate amendments to Attachment 4. The Party affected by the failure to meet a milestone shall not unreasonably withhold agreement to such an amendment unless it will suffer significant uncompensated economic or operational harm from the delay, (2) attainment of the same milestone has previously been delayed, or (3) it has reason to believe that the delay in meeting the milestone is intentional or unwarranted notwithstanding the circumstances explained by the Party proposing the amendment.

6.3 Financial Security Arrangements

At least 20 Business Days prior to the commencement of the design, procurement, installation, or construction of a discrete portion of the Transmission Provider's Interconnection Facilities and Upgrades, the Interconnection Customer shall provide the Transmission Provider, at the Interconnection Customer's option, a guarantee, a surety bond, letter of credit or other form of security that is reasonably acceptable to the Transmission Provider and is consistent with the Uniform Commercial Code of the jurisdiction where the Point of Interconnection is located. Such security for payment shall

be in an amount sufficient to cover the costs for constructing, designing, procuring, and installing the applicable portion of the Transmission Provider's Interconnection Facilities and Upgrades and shall be reduced on a dollar-for-dollar basis for payments made to the Transmission Provider under this Agreement during its term. In addition:

6.3.1 The guarantee must be made by an entity that meets the creditworthiness requirements of the Transmission Provider, and contain terms and conditions that guarantee payment of any amount that may be due from the Interconnection Customer, up to an agreed-to maximum amount.

6.3.2 The letter of credit or surety bond must be issued by a financial institution or insurer reasonably acceptable to the Transmission Provider and must specify a reasonable expiration date.

Article 7. Assignment, Liability, Indemnity, Force Majeure, Consequential Damages, and Default

7.1 Assignment

This Agreement may be assigned by either Party upon 15 Business Days prior written notice and opportunity to object by the other Party; provided that:

7.1.1 Either Party may assign this Agreement without the consent of the other Party to any affiliate of the assigning Party with an equal or greater credit rating and with the legal authority and operational ability to satisfy the obligations of the assigning Party under this Agreement, provided that the Interconnection Customer promptly notifies the Transmission Provider of any such assignment;

7.1.2 The Interconnection Customer shall have the right to assign this Agreement, without the consent of the Transmission Provider, for collateral security purposes to aid in providing financing for the Small Generating Facility, provided that the Interconnection Customer will promptly notify the Transmission Provider of any such assignment.

7.1.3 Any attempted assignment that violates this article is void and ineffective. Assignment shall not relieve a Party of its obligations, nor shall a Party's obligations be enlarged, in whole or in part, by reason thereof. An assignee is responsible for meeting the same financial, credit, and insurance obligations as the Interconnection Customer. Where required, consent to assignment will not be unreasonably withheld, conditioned or delayed.

7.2 Limitation of Liability

Each Party's liability to the other Party for any loss, cost, claim, injury, liability, or expense, including reasonable attorney's fees, relating to or arising from any act or omission in its performance of this Agreement, shall be limited to the amount of direct damage actually incurred. In no event shall either Party be liable to the other Party for any indirect, special, consequential, or punitive damages, except as authorized by this Agreement.

7.3 Indemnity

7.3.1 This provision protects each Party from liability incurred to third parties as a result of carrying out the provisions of this Agreement. Liability under this provision is exempt from the general limitations on liability found in article 7.2.

7.3.2 The Parties shall at all times indemnify, defend, and hold the other Party harmless from, any and all damages, losses, claims, including claims and actions relating to injury to or death of any person or damage to property, demand, suits, recoveries, costs and expenses, court costs, attorney fees, and all other obligations by or to third parties, arising out of or resulting from the other Party's action or failure to meet its obligations under this Agreement on behalf of the indemnifying Party, except in cases of gross negligence or intentional wrongdoing by the indemnified Party.

7.3.3 If an indemnified person is entitled to indemnification under this article as a result of a claim by a third party, and the indemnifying Party fails, after notice and reasonable opportunity to proceed under this article, to assume the defense of such claim, such indemnified person may at the expense of the indemnifying Party contest, settle or consent to the entry of any judgment with respect to, or pay in full, such claim.

7.3.4 If an indemnifying party is obligated to indemnify and hold any indemnified person harmless under this article, the amount owing to the indemnified person shall be the amount of such indemnified person's actual loss, net of any insurance or other recovery.

7.3.5 Promptly after receipt by an indemnified person of any claim or notice of the commencement of any action or administrative or legal proceeding or investigation as to which the indemnity provided for in this article may apply, the indemnified person shall notify the indemnifying party of such fact. Any failure of or delay in such notification shall not affect a Party's indemnification obligation unless such failure or delay is materially prejudicial to the indemnifying party.

7.4 Consequential Damages

Other than as expressly provided for in this Agreement, neither Party shall be liable under any provision of this Agreement for any losses, damages, costs or expenses for any special, indirect, incidental, consequential, or punitive damages, including but not limited to loss of profit or revenue, loss of the use of equipment, cost of capital, cost of temporary equipment or services, whether based in whole or in part in contract, in tort, including negligence, strict liability, or any other theory of liability; provided, however, that damages for which a Party may be liable to the other Party under another agreement will not be considered to be special, indirect, incidental, or consequential damages hereunder.

7.5 Force Majeure

7.5.1 As used in this article, a Force Majeure Event shall mean "any act of God, labor disturbance, act of the public enemy, war, insurrection, riot, fire, storm or flood, explosion, breakage or accident to machinery or equipment, any order, regulation or restriction imposed by governmental, military or lawfully established civilian authorities, or any other cause beyond a Party’s control. A Force Majeure Event does not include an act of negligence or intentional wrongdoing."

7.5.2 If a Force Majeure Event prevents a Party from fulfilling any obligations under this Agreement, the Party affected by the Force Majeure Event (Affected Party) shall promptly notify the other Party, either in writing or via the telephone, of the existence of the Force Majeure Event. The notification must specify in reasonable detail the circumstances of the Force Majeure Event, its expected duration, and the steps that the Affected Party is taking to mitigate the effects of the event on its performance. The Affected Party shall keep the other Party informed on a continuing basis of developments relating to the Force Majeure Event until the event ends. The Affected Party will be entitled to suspend or modify its performance of obligations under this Agreement (other than the obligation to make payments) only to the extent that the effect of the Force Majeure Event cannot be mitigated by the use of Reasonable Efforts. The Affected Party will use Reasonable Efforts to resume its performance as soon as possible.

7.6 Default

7.6.1 No Default shall exist where such failure to discharge an obligation (other than the payment of money) is the result of a Force Majeure Event as defined in this Agreement or the result of an act or omission of the other Party. Upon a Default, the non-defaulting Party shall give written notice of such Default to the defaulting Party. Except as provided in article 7.6.2, the defaulting Party shall have 60 calendar days from receipt of the Default notice within which to cure such Default; provided however, if such Default is not capable of cure within 60 calendar days, the defaulting Party shall commence such cure within 20 calendar days after notice and continuously and diligently complete such cure within six months from receipt of the Default notice; and, if cured within such time, the Default specified in such notice shall cease to exist.

7.6.2 If a Default is not cured as provided in this article, or if a Default is not capable of being cured within the period provided for herein, the non-defaulting Party shall have the right to terminate this Agreement by written notice at any time until cure occurs, and be relieved of any further obligation hereunder and, whether or not that Party terminates this Agreement, to recover from the defaulting Party all amounts due hereunder, plus all other damages and remedies to which it is entitled at law or in equity. The provisions of this article will survive termination of this Agreement.

Article 8. Insurance

8.1 The Interconnection Customer shall, at its own expense, maintain in force general liability insurance without any exclusion for liabilities related to the interconnection undertaken pursuant to this Agreement. The amount of such insurance shall be sufficient to insure against all reasonably foreseeable direct liabilities given the size and nature of the generating equipment being interconnected, the interconnection itself, and the characteristics of the system to which the interconnection is made. The Interconnection Customer shall obtain additional insurance only if necessary as a function of owning and operating a generating facility. Such insurance shall be obtained from an insurance provider authorized to do business in the State where the interconnection is located. Certification that such insurance is in effect shall be provided upon request of the Transmission Provider, except that the Interconnection Customer shall show proof of

insurance to the Transmission Provider no later than ten Business Days prior to the anticipated commercial operation date. An Interconnection Customer of sufficient credit-worthiness may propose to self-insure for such liabilities, and such a proposal shall not be unreasonably rejected.

8.2 The Transmission Provider agrees to maintain general liability insurance or self-insurance consistent with the Transmission Provider's commercial practice. Such insurance or self-insurance shall not exclude coverage for the Transmission Provider's liabilities undertaken pursuant to this Agreement.

8.3 The Parties further agree to notify each other whenever an accident or incident occurs resulting in any injuries or damages that are included within the scope of coverage of such insurance, whether or not such coverage is sought.

Article 9. Confidentiality

9.1 Confidential Information shall mean any confidential and/or proprietary information provided by one Party to the other Party that is clearly marked or otherwise designated "Confidential." For purposes of this Agreement all design, operating specifications, and metering data provided by the Interconnection Customer shall be deemed Confidential Information regardless of whether it is clearly marked or otherwise designated as such.

9.2 Confidential Information does not include information previously in the public domain, required to be publicly submitted or divulged by Governmental Authorities (after notice to the other Party and after exhausting any opportunity to oppose such publication or release), or necessary to be divulged in an action to enforce this Agreement. Each Party receiving Confidential Information shall hold such information in confidence and shall not disclose it to any third party nor to the public without the prior written authorization from the Party providing that information, except to fulfill obligations under this Agreement, or to fulfill legal or regulatory requirements.

9.2.1 Each Party shall employ at least the same standard of care to protect Confidential Information obtained from the other Party as it employs to protect its own Confidential Information.

9.2.2 Each Party is entitled to equitable relief, by injunction or otherwise, to enforce its rights under this provision to prevent the release of Confidential Information without bond or proof of damages, and may seek other remedies available at law or in equity for breach of this provision.

9.3 Notwithstanding anything in this article to the contrary, and pursuant to 18 CFR § 1b.20, if FERC, during the course of an investigation or otherwise, requests information from one of the Parties that is otherwise required to be maintained in confidence pursuant to this Agreement, the Party shall provide the requested information to FERC, within the time provided for in the request for information. In providing the information to FERC, the Party may, consistent with 18 CFR § 388.112, request that the information be treated as confidential and non-public by FERC and that the information be withheld from public disclosure. Parties are prohibited from notifying the other Party to this Agreement prior to the release of the Confidential Information to FERC. The Party shall notify the other Party to this Agreement when it is notified by FERC that a request to release Confidential Information has been received by FERC, at which time either of the Parties may respond

before such information would be made public, pursuant to 18 CFR § 388.112. Requests from a state regulatory body conducting a confidential investigation shall be treated in a similar manner if consistent with the applicable state rules and regulations.

Article 10. Disputes

10.1 The Parties agree to attempt to resolve all disputes arising out of the interconnection process according to the provisions of this article.

10.2 In the event of a dispute, either Party shall provide the other Party with a written Notice of Dispute. Such Notice shall describe in detail the nature of the dispute.

10.3 If the dispute has not been resolved within two Business Days after receipt of the Notice, either Party may contact FERC's Dispute Resolution Service (DRS) for assistance in resolving the dispute.

10.4 The DRS will assist the Parties in either resolving their dispute or in selecting an appropriate dispute resolution venue (e.g., mediation, settlement judge, early neutral evaluation, or technical expert) to assist the Parties in resolving their dispute. DRS can be reached at 1-877-337-2237 or via the internet at http://www.ferc.gov/legal/adr.asp.

10.5 Each Party agrees to conduct all negotiations in good faith and will be responsible for one-half of any costs paid to neutral third-parties.

10.6 If neither Party elects to seek assistance from the DRS, or if the attempted dispute resolution fails, then either Party may exercise whatever rights and remedies it may have in equity or law consistent with the terms of this Agreement.

Article 11. Taxes

11.1 The Parties agree to follow all applicable tax laws and regulations, consistent with FERC policy and Internal Revenue Service requirements.

11.2 Each Party shall cooperate with the other to maintain the other Party's tax status. Nothing in this Agreement is intended to adversely affect the Transmission Provider's tax exempt status with respect to the issuance of bonds including, but not limited to, local furnishing bonds.

Article 12. Miscellaneous

12.1 Governing Law, Regulatory Authority, and Rules
The validity, interpretation and enforcement of this Agreement and each of its provisions shall be governed by the laws of the state of _____ (where the Point of Interconnection is located), without regard to its conflicts of law principles. This Agreement is subject to all Applicable Laws and Regulations. Each Party expressly reserves the right to seek changes in, appeal, or otherwise contest any laws, orders, or regulations of a Governmental Authority.

12.2 Amendment
The Parties may amend this Agreement by a written instrument duly executed by both Parties, or under article 12.2 of this Agreement.

12.3 No Third-Party Beneficiaries

This Agreement is not intended to and does not create rights, remedies, or benefits of any character whatsoever in favor of any persons, corporations, associations, or entities other than the Parties, and the obligations herein assumed are solely for the use and benefit of the Parties, their successors in interest and where permitted, their assigns.

12.4 Waiver

12.4.1 The failure of a Party to this Agreement to insist, on any occasion, upon strict performance of any provision of this Agreement will not be considered a waiver of any obligation, right, or duty of, or imposed upon, such Party.

12.4.2 Any waiver at any time by either Party of its rights with respect to this Agreement shall not be deemed a continuing waiver or a waiver with respect to any other failure to comply with any other obligation, right, duty of this Agreement. Termination or default of this Agreement for any reason by Interconnection Customer shall not constitute a waiver of the Interconnection Customer's legal rights to obtain an interconnection from the Transmission Provider. Any waiver of this Agreement shall, if requested, be provided in writing.

12.5 Entire Agreement

This Agreement, including all Attachments, constitutes the entire agreement between the Parties with reference to the subject matter hereof, and supersedes all prior and contemporaneous understandings or agreements, oral or written, between the Parties with respect to the subject matter of this Agreement. There are no other agreements, representations, warranties, or covenants which constitute any part of the consideration for, or any condition to, either Party's compliance with its obligations under this Agreement.

12.6 Multiple Counterparts

This Agreement may be executed in two or more counterparts, each of which is deemed an original but all constitute one and the same instrument.

12.7 No Partnership

This Agreement shall not be interpreted or construed to create an association, joint venture, agency relationship, or partnership between the Parties or to impose any partnership obligation or partnership liability upon either Party. Neither Party shall have any right, power or authority to enter into any agreement or undertaking for, or act on behalf of, or to act as or be an agent or representative of, or to otherwise bind, the other Party.

12.8 Severability

If any provision or portion of this Agreement shall for any reason be held or adjudged to be invalid or illegal or unenforceable by any court of competent jurisdiction or other Governmental Authority, (1) such portion or provision shall be deemed separate and independent, (2) the Parties shall negotiate in good faith to restore insofar as practicable the benefits to each Party that were affected by such ruling, and (3) the remainder of this Agreement shall remain in full force and effect.

12.9 Security Arrangements

Infrastructure security of electric system equipment and operations and control hardware and software is essential to ensure day-to-day reliability and operational security. FERC expects all Transmission Providers, market participants, and Interconnection Customers interconnected to electric systems to comply with the recommendations offered by the President's Critical Infrastructure Protection Board and, eventually, best practice recommendations from the electric reliability authority. All public utilities are expected to meet basic standards for system infrastructure and operational security, including physical, operational, and cyber-security practices.

12.10 Environmental Releases

Each Party shall notify the other Party, first orally and then in writing, of the release of any hazardous substances, any asbestos or lead abatement activities, or any type of remediation activities related to the Small Generating Facility or the Interconnection Facilities, each of which may reasonably be expected to affect the other Party. The notifying Party shall (1) provide the notice as soon as practicable, provided such Party makes a good faith effort to provide the notice no later than 24 hours after such Party becomes aware of the occurrence, and (2) promptly furnish to the other Party copies of any publicly available reports filed with any governmental authorities addressing such events.

12.11 Subcontractors

Nothing in this Agreement shall prevent a Party from utilizing the services of any subcontractor as it deems appropriate to perform its obligations under this Agreement; provided, however, that each Party shall require its subcontractors to comply with all applicable terms and conditions of this Agreement in providing such services and each Party shall remain primarily liable to the other Party for the performance of such subcontractor.

12.11.1 The creation of any subcontract relationship shall not relieve the hiring Party of any of its obligations under this Agreement. The hiring Party shall be fully responsible to the other Party for the acts or omissions of any subcontractor the hiring Party hires as if no subcontract had been made; provided, however, that in no event shall the Transmission Provider be liable for the actions or inactions of the Interconnection Customer or its subcontractors with respect to obligations of the Interconnection Customer under this Agreement. Any applicable obligation imposed by this Agreement upon the hiring Party shall be equally binding upon, and shall be construed as having application to, any subcontractor of such Party.

12.11.2 The obligations under this article will not be limited in any way by any limitation of subcontractor’s insurance.

12.12 Reservation of Rights

The Transmission Provider shall have the right to make a unilateral filing with FERC to modify this Agreement with respect to any rates, terms and conditions, charges, classifications of service, rule or regulation under section 205 or any other applicable provision of the Federal Power Act and FERC's rules and regulations thereunder, and the Interconnection Customer shall have the right to make a unilateral filing with FERC to modify this Agreement under any applicable provision of the Federal Power Act and FERC's rules and regulations; provided that each Party shall have the right to protest any such filing by the other Party and to participate fully in any proceeding before FERC in which such modifications may be considered. Nothing in this Agreement shall limit the rights of the Parties or of FERC under sections 205 or 206 of the Federal Power Act and

FERC's rules and regulations, except to the extent that the Parties otherwise agree as provided herein.

Article 13. Notices

13.1 General

Unless otherwise provided in this Agreement, any written notice, demand, or request required or authorized in connection with this Agreement ("Notice") shall be deemed properly given if delivered in person, delivered by recognized national currier service, or sent by first class mail, postage prepaid, to the person specified below:

If to the Interconnection Customer:

Interconnection Customer: _____
Attention: _____
Address: _____
City: _____ State: _____ Zip:_____
Phone: _____ Fax: _____

If to the Transmission Provider:

Transmission Provider: _____
Attention: _____
Address: _____
City: _____ State: _____ Zip:_____
Phone: _____ Fax: _____

13.2 Billing and Payment

Billings and payments shall be sent to the addresses set out below:

Interconnection Customer: _____
Attention: _____
Address: _____
City: _____ State: _____ Zip:_____

Transmission Provider: _____
Attention: _____
Address: _____
City: _____ State: _____ Zip:_____

13.3 Alternative Forms of Notice

Any notice or request required or permitted to be given by either Party to the other and not required by this Agreement to be given in writing may be so given by telephone, facsimile or e-mail to the telephone numbers and e-mail addresses set out below:

If to the Interconnection Customer:

Interconnection Customer: _____
Attention: _____
Address: _____
City: _____ State: _____ Zip:_____
Phone: _____ Fax: _____

If to the Transmission Provider:

Transmission Provider: _____
Attention: _____
Address: _____
City: _____ State: _____ Zip:_____
Phone: _____ Fax: _____

13.4 Designated Operating Representative

The Parties may also designate operating representatives to conduct the communications which may be necessary or convenient for the administration of this Agreement. This person will also serve as the point of contact with respect to operations and maintenance of the Party's facilities.

Interconnection Customer's Operating Representative:

Interconnection Customer:_____
Attention: _____
Address: _____
City: _____ State: _____ Zip:_____
Phone: _____ Fax: _____

Transmission Provider's Operating Representative:

Transmission Provider_____
Attention: _____
Address: _____
City: _____ State: _____ Zip:_____
Phone: _____ Fax: _____

13.5 Changes to the Notice Information

Either Party may change this information by giving five Business Days written notice prior to the effective date of the change.

Article 14. Signatures

IN WITNESS WHEREOF, the Parties have caused this Agreement to be executed by their respective duly authorized representatives.

For the Transmission Provider

Name: _____

Title: _____

Date: _____

For the Interconnection Customer

Name: _____

Title: _____

Date: _____

Attachment 1

Glossary of Terms

Affected System – An electric system other than the Transmission Provider's Transmission System that may be affected by the proposed interconnection.

Applicable Laws and Regulations – All duly promulgated applicable federal, state and local laws, regulations, rules, ordinances, codes, decrees, judgments, directives, or judicial or administrative orders, permits and other duly authorized actions of any Governmental Authority.

Business Day – Monday through Friday, excluding Federal Holidays.

Default – The failure of a breaching Party to cure its breach under the Small Generator Interconnection Agreement.

Distribution System – The Transmission Provider's facilities and equipment used to transmit electricity to ultimate usage points such as homes and industries directly from nearby generators or from interchanges with higher voltage transmission networks which transport bulk power over longer distances. The voltage levels at which Distribution Systems operate differ among areas.

Distribution Upgrades – The additions, modifications, and upgrades to the Transmission Provider's Distribution System at or beyond the Point of Interconnection to facilitate interconnection of the Small Generating Facility and render the transmission service necessary to effect the Interconnection Customer's wholesale sale of electricity in interstate commerce. Distribution Upgrades do not include Interconnection Facilities.

Good Utility Practice – Any of the practices, methods and acts engaged in or approved by a significant portion of the electric industry during the relevant time period, or any of the practices, methods and acts which, in the exercise of reasonable judgment in light of the facts known at the time the decision was made, could have been expected to accomplish the desired result at a reasonable cost consistent with good business practices, reliability, safety and expedition. Good Utility Practice is not intended to be limited to the optimum practice, method, or act to the exclusion of all others, but rather to be acceptable practices, methods, or acts generally accepted in the region.

Governmental Authority – Any federal, state, local or other governmental regulatory or administrative agency, court, commission, department, board, or other governmental subdivision, legislature, rulemaking board, tribunal, or other governmental authority having jurisdiction over the Parties, their respective facilities, or the respective services they provide, and exercising or entitled to exercise any administrative, executive, police, or taxing authority or power; provided, however, that such term does not include the Interconnection Customer, the Interconnection Provider, or any Affiliate thereof.

Interconnection Customer – Any entity, including the Transmission Provider, the Transmission Owner or any of the affiliates or subsidiaries of either, that proposes to interconnect its Small Generating Facility with the Transmission Provider's Transmission System.

Interconnection Facilities – The Transmission Provider's Interconnection Facilities and the Interconnection Customer's Interconnection Facilities. Collectively, Interconnection Facilities include all facilities and equipment between the Small Generating Facility and the Point of

Interconnection, including any modification, additions or upgrades that are necessary to physically and electrically interconnect the Small Generating Facility to the Transmission Provider's Transmission System. Interconnection Facilities are sole use facilities and shall not include Distribution Upgrades or Network Upgrades.

Interconnection Request – The Interconnection Customer's request, in accordance with the Tariff, to interconnect a new Small Generating Facility, or to increase the capacity of, or make a Material Modification to the operating characteristics of, an existing Small Generating Facility that is interconnected with the Transmission Provider's Transmission System.

Material Modification – A modification that has a material impact on the cost or timing of any Interconnection Request with a later queue priority date.

Network Upgrades – Additions, modifications, and upgrades to the Transmission Provider's Transmission System required at or beyond the point at which the Small Generating Facility interconnects with the Transmission Provider's Transmission System to accommodate the interconnection of the Small Generating Facility with the Transmission Provider's Transmission System. Network Upgrades do not include Distribution Upgrades.

Operating Requirements – Any operating and technical requirements that may be applicable due to Regional Transmission Organization, Independent System Operator, control area, or the Transmission Provider's requirements, including those set forth in the Small Generator Interconnection Agreement.

Party or Parties – The Transmission Provider, Transmission Owner, Interconnection Customer or any combination of the above.

Point of Interconnection – The point where the Interconnection Facilities connect with the Transmission Provider's Transmission System.

Reasonable Efforts – With respect to an action required to be attempted or taken by a Party under the Small Generator Interconnection Agreement, efforts that are timely and consistent with Good Utility Practice and are otherwise substantially equivalent to those a Party would use to protect its own interests.

Small Generating Facility – The Interconnection Customer's device for the production and/or storage for later injection of electricity identified in the Interconnection Request, but shall not include the Interconnection Customer's Interconnection Facilities.

Tariff – The Transmission Provider or Affected System's Tariff through which open access transmission service and Interconnection Service are offered, as filed with the FERC, and as amended or supplemented from time to time, or any successor tariff.

Transmission Owner – The entity that owns, leases or otherwise possesses an interest in the portion of the Transmission System at the Point of Interconnection and may be a Party to the Small Generator Interconnection Agreement to the extent necessary.

Transmission Provider – The public utility (or its designated agent) that owns, controls, or operates transmission or distribution facilities used for the transmission of electricity in interstate commerce and provides transmission service under the Tariff. The term Transmission Provider

should be read to include the Transmission Owner when the Transmission Owner is separate from the Transmission Provider.

Transmission System – The facilities owned, controlled or operated by the Transmission Provider or the Transmission Owner that are used to provide transmission service under the Tariff.

Upgrades – The required additions and modifications to the Transmission Provider's Transmission System at or beyond the Point of Interconnection. Upgrades may be Network Upgrades or Distribution Upgrades. Upgrades do not include Interconnection Facilities.

Attachment 2

Description and Costs of the Small Generating Facility, Interconnection Facilities, and Metering Equipment

Equipment, including the Small Generating Facility, Interconnection Facilities, and metering equipment shall be itemized and identified as being owned by the Interconnection Customer, the Transmission Provider, or the Transmission Owner. The Transmission Provider will provide a best estimate itemized cost, including overheads, of its Interconnection Facilities and metering equipment, and a best estimate itemized cost of the annual operation and maintenance expenses associated with its Interconnection Facilities and metering equipment.

Attachment 3

One-line Diagram Depicting the Small Generating Facility, Interconnection Facilities, Metering Equipment, and Upgrades

Attachment 4

Milestones

In-Service Date: _____

Critical milestones and responsibility as agreed to by the Parties:

Milestone/Date	Responsible Party
(1) _____	_____
(2) _____	_____
(3) _____	_____
(4) _____	_____
(5) _____	_____
(6) _____	_____
(7) _____	_____
(8) _____	_____
(9) _____	_____
(10) _____	_____

Agreed to by:

For the Transmission Provider_____ Date _____

For the Transmission Owner (If Applicable) _____ Date _____

For the Interconnection Customer _____ Date _____

Attachment 5

Additional Operating Requirements for the Transmission Provider's Transmission System and Affected Systems Needed to Support the Interconnection Customer's Needs

The Transmission Provider shall also provide requirements that must be met by the Interconnection Customer prior to initiating parallel operation with the Transmission Provider's Transmission System.

Attachment 6

Transmission Provider's Description of its Upgrades and Best Estimate of Upgrade Costs

The Transmission Provider shall describe Upgrades and provide an itemized best estimate of the cost, including overheads, of the Upgrades and annual operation and maintenance expenses associated with such Upgrades. The Transmission Provider shall functionalize Upgrade costs and annual expenses as either transmission or distribution related.

ATTACHMENT Q

Creditworthiness Procedures

It is the policy of the Transmission Provider that prior to an entity ("Applicant" or "Transmission Customer") taking any service under the Transmission Provider's Tariff, or becoming a Transmission Customer, the Applicant must demonstrate its ability to meet the Transmission Provider's credit requirements. Credit review shall be made in accordance with commercially reasonable practices.

Prior to becoming a Transmission Customer, each Applicant must undergo a credit evaluation in order to determine the level of unsecured credit Transmission Provider is willing to extend ("Unsecured Credit Limit") to Transmission Customer for services under the Tariff. Each Applicant and/or Transmission Customer will be subject to a complete credit evaluation that will include, but not be limited to, a review of financial statements, Rating Agency (Standard & Poor's, Moody's Investors Service, Fitch Ratings) reports (if available), and other pertinent indicators of credit strength. Upon becoming a Transmission Customer, an Applicant/Transmission Customer will be subject to a periodic credit evaluation to verify continuing creditworthiness. In addition to this transmission Creditworthiness Procedure, Transmission Provider will post its detailed Transmission Credit business practices on OASIS to advise Transmission Customers of more specific credit criterion, which shall not be inconsistent with these Creditworthiness Procedures.

Transmission Service includes, but is not limited to, all services under the Transmission Provider's Tariff, including ancillary services. To the extent provisions of the Tariff establish specific credit requirements mandated by FERC -- including, but not limited to, the Large Generation Interconnection Procedure (LGIP) and Large Generation Interconnection Agreement (LGIA) established by FERC Order No. 2003 -- those credit requirements will apply to those services rather than this Transmission Credit Policy to the extent there is any inconsistency between the LGIP/LGIA credit requirements and this Transmission Credit Policy.

The Transmission Credit Policy requirements are separate from the credit requirements applicable to wholesale power/gas sale or purchase transactions an Applicant/Transmission Customer may have in place with an Xcel Energy Operating Company. The Risk Management function of Xcel Energy Services Inc. shall administer this Transmission Credit Policy for Transmission Provider. The Transmission Provider will apply this Transmission Credit Policy consistent with FERC Order No. 2004, Standards of Conduct for Transmission Providers.

CREDIT EVALUATION:

The Transmission Provider will perform a credit evaluation for each Applicant and/or Transmission Customer approximately every twelve (12) months, or more frequently if the Transmission Provider has commercially reasonable grounds to believe there has been a Material Adverse Change in the Transmission Customer's creditworthiness. If the Applicant and/or Transmission Customer is determined to be creditworthy, an Unsecured Credit Limit will be established which must equal the historical, or estimated highest 60 day credit exposure. If the Unsecured Credit Limit granted is insufficient, or unsecured credit is denied, the Applicant and/or Transmission Customer must provide collateral/security ("Financial Security") required by the Transmission Provider in a form and amount satisfactory to the Transmission Provider. Non-compliance with the Transmission Credit Policy and the request for Financial Security will be considered a default. Upon written notification, the Transmission Customer will have two (2) business days (three (3) business days if

notified after 12:00 Noon Mountain Prevailing Time (MPT) to provide the requested Financial Security.

An Applicant will be notified in writing within ten (10) business days of the status of its credit evaluation. Within ten (10) business days after notification of the Transmission Provider's creditworthiness determination, an Applicant may request, in writing, a review of determinations of credit levels or collateral requirements. The Transmission Provider will respond no later than twenty (20) business days after receipt of written request.

A Transmission Customer will be notified in writing of any reduction in unsecured credit or increase in Financial Security requirements, if applicable, as the result of the Transmission Provider's credit evaluation. Within ten (10) business days after receipt of such notification, the Transmission Customer may request, in writing, a review of the credit evaluation. The Transmission Provider will respond no later than twenty (20) business days after receipt of written request. During the review period, all terms of this Transmission Credit Policy regarding providing Financial Security must be complied with.

If a guaranty ("Corporate Guaranty") is being utilized to establish credit for an Applicant and/or Transmission Customer, the party issuing the guaranty ("Guarantor") will be evaluated and the Unsecured Credit Limit granted, if any, based on the financial evaluation and strength of the Guarantor.

Initial Credit Evaluation – Transmission Provider will consider:

Rating Agency Reports:

The Transmission Provider will review the Senior Unsecured (un-enhanced by third-party support), Long Term Debt ratings for Applicant/Transmission Customer issued by Standard & Poor's, Moody's Investors Service, Fitch Ratings, or other agreed upon rating sources. If unsecured, senior, long-term debt ratings are not available, the Transmission Provider may consider Issuer Ratings, or underlying ratings, if applicable.

Financial Statements and Related Information:

Each Applicant or Transmission Customer must submit audited financial statements for the three (3) fiscal years most recently ended, or the period of existence of the Applicant/Transmission Customer, if shorter. Upon request, if deemed appropriate by the Transmission Provider, Applicant, or Transmission Customer must also provide their most recently finished fiscal quarter complete set of financial statements. The information reviewed should include, but not be limited to, the following:

If publicly traded entity -
Annual Reports, or Form 10K for the three (3) fiscal years most recently ended, together with any amendments thereto (Transmission Provider will download information available on the SEC site).

If privately held or Public Power Entity-
For the three (3) fiscal years most recently ended, a complete set of audited financial statements, including notes and any management discussions.

References:

Each Applicant/Transmission Customer is to provide their primary bank name and account number and three (3) major industry trade references including fax, phone and, if applicable, email contact information.

Estimated Peak Load Data Requirements:

Each Applicant will present to the Transmission Provider staff its estimated annual Peak Load. This will be used, among other purposes, to estimate the highest anticipated sixty (60) day credit exposure.

Material Adverse Changes:

For the purpose of this policy, a Material Adverse Change to a Transmission Customer/Applicant includes, but is not necessarily limited to, the following:

- A downgrade of any debt rating or Issuer Rating to below investment grade
- An adverse change in the outlook of any debt rating or being placed on credit watch with negative implication
- A bankruptcy filing
- Insolvency or inability to pay debts as they become due
- Late payments to Transmission Provider
- Material deterioration to the financial measures in this Transmission Credit Policy
- Not providing to Transmission Provider required standard financial statements
- Expiration, cancellation, or termination of credit support, if applicable, without Transmission Provider's consent.
- Default on any contractual obligation exceeding 10% of tangible net worth.
- A judgment in a proceeding adversely affecting creditor's rights
- The appointment of an administrator, liquidator, factor, receiver, custodian or similar official
- A secured party takes possession of all or substantially all of its assets

Upon the occurrence of a Material Adverse Change, the creditworthiness of the Transmission Customer/Applicant may be reevaluated by the Transmission Provider. This may result in the need to provide Financial Security or additional Financial Security, consistent with commercially reasonable practices, to protect the Transmission Provider against the risk of non-payment.

In the credit evaluation of a Public Power Entity (cooperative, government agency or municipal utility), the Transmission Provider may request additional information as part of the overall financial review process and will consider other relevant factors in determining financial strength and creditworthiness.

CREDITWORTHINESS:

Evaluation of Creditworthiness

A Credit Score (using the criteria weighting posted on OASIS) will be generated from the Transmission Provider's review and analysis of the information obtained through the initial and ongoing credit evaluation process described in this Transmission Credit Policy. Key

factors in the scoring process include, but are not limited to, ratings from Rating Agencies, financial statements and trade references. The Transmission Provider will consistently apply the credit scoring process described in this Transmission Credit Policy in determining Credit Scores.

Credit Score – Public Power Entity

The analysis for a Public Power Entity will be comprised of a financial and qualitative analysis

The financial score considers the financial measures shown below. These measures will be calculated for each Applicant/Transmission Customer.

Measures
Current Ratio
Working Capital
Tangible Net Worth
EBIT Interest Coverage
EBITDA Interest Coverage
Pre-tax Return on Equity
Long-term Debt / Equity
Total Debt / Total Capitalization

The qualitative score will assess non-financial measures. Qualitative criteria do not have specific requirements, only a positive or negative assessment. The qualitative analysis will take into account a variety of information, including the assessment of the following characteristics (when applicable) of each Applicant/Transmission Customer: (1) the ability to set rates without seeking regulatory approval (a positive attribute); (2) the financial protections afforded unsecured creditors contained in the contracts and other legal documents related to the formation and governance of public power entities (financial protections are positive); (3) availability of current information, financial, economic, or otherwise, relevant to the creditworthiness analysis of the Applicant/Transmission Customer, on publicly accessible internet sites (a positive factor); (4) rating agency ratings assigned to unsecured debt (a minimum rating is not required, investment grade is positive, non-investment grade is negative, negative outlook or credit watch is negative); (5) relative size, composition of assets, type of entity (a generation and transmission entity with fixed assets is positive, a marketing entity with little or no fixed assets is negative);(6) length of time in business (ten years or more is positive, five or less is negative); (7) trade references and payment history (positive or negative); (8) Overall quality of financial information (complete and audited statements including all notes are positive). The overall qualitative score will range from 1 (positive) to 6 (negative) according to the overall assessment of all qualitative characteristics.

Credit Score – Non-Public Power Entity

A Non-Public Power Composite Score shall be derived for each Applicant/Transmission Customer that is not a Public Power Entity. The analysis for a Non-Public Power Entity will also be comprised of financial and qualitative components.

The financial score is comprised of the financial measures below.

Measures
EBIT Interest Coverage
Total Debt / Total Capitalization
CFFO / Total Debt
Tangible Net Worth

The qualitative score will assess non-financial measures. Qualitative criteria do not have specific requirements, only a positive or negative assessment. The qualitative analysis will take into account a variety of information including the assessment of the following characteristics (when applicable) of each Applicant/Transmission Customer: (1) the ability to set rates without seeking regulatory approval (a positive attribute); (2) the financial protections afforded unsecured creditors contained in the contracts and other legal documents related to the formation and governance of non-public power entities (financial protections are positive); (3) availability of current information, financial, economic, or otherwise, relevant to the creditworthiness analysis of the Applicant/Transmission Customer, on publicly accessible internet sites (a positive factor); and (4) rating agency ratings assigned to unsecured debt (a minimum rating is not required, investment grade is positive, non-investment grade is negative, negative outlook or credit watch is negative); (5) relative size, composition of assets, type of entity (a generation and transmission entity with fixed assets is positive, a marketing entity with little or no fixed assets is negative);(6) length of time in business (ten years or more is positive, five or less is negative); (7) trade references and payment history (positive or negative); (8) Overall quality of financial information (complete and audited statements including all notes are positive). The overall qualitative score will range from 1 (positive) to 6 (negative) according to the overall assessment of all qualitative characteristics.

Maximum Unsecured Credit Limit

The maximum Unsecured Credit Limit for an Applicant/Transmission Customer is determined by their Composite Credit Score, industry sector, and tangible net worth as outlined in tables included in the Transmission Credit Policy posted on OASIS.

Minimum Unsecured Credit Limit

For a Public Power Entity, the Unsecured Credit Limit floor for creditworthy entities is $250,000.

Revisions to Unsecured Credit Limit

Based on the occurrence of a Material Adverse Change to a Transmission Customer/Applicant, the Transmission Provider has the right to modify the Unsecured Credit Limit and/or require additional Financial Security as may be reasonably necessary to support the Applicant/Transmission Customer's ability to pay for services provided under this Tariff and other related transmission service agreements. Within three (3) business days the Transmission Provider will notify the Applicant/Transmission Customer in writing of the requirement to provide Financial Security as a result of the reduction or revocation of the previously granted amount of Unsecured Credit Limit. The Applicant/Transmission Customer shall have two (2) business days from receipt of written notification (three (3) business days if notification occurs after 12:00 Noon MPT) to provide the Financial Security required in an amount and form acceptable to the Transmission Provider.

The Applicant/Transmission Customer may request, in writing, an explanation of credit line decisions or collateral requirements. The Transmission Provider will make every effort to respond within ten (10) business days of such a written request.

The Applicant/Transmission Customer may contest, in writing, determinations or changes of credit levels or collateral requirements. The Transmission Provider will make reasonable efforts to respond within ten (10) business days of such a written request. The Applicant/Transmission Customer must still provide any required Financial Security, within the indicated time periods, as stated in this summary and on OASIS, while the review and response is in process.

Total Credit Limit and Allocation Requirement

The Total Credit Limit for a Participant is the sum of its Unsecured Credit Limit and the Financial Security provided, if any.

Total Potential Exposure

In general, the calculation of potential exposure to non-payment is based on three (3) exposure components:

- Invoiced but not paid;
- Measured but not invoiced, where measured means the systems have computed the charges and credits for all transactions for a given period of time; and
- Estimated for future days (up to the next payment due date) based on known and/or potential activity.

Total Potential Exposure Exceedance

An Applicant/Transmission Customer will be required to make payments of invoiced but unpaid amounts to reduce its Total Potential Exposure and/or provide additional Financial Security to increase its Total Credit Limit when its Total Potential Exposure equals or exceeds its Total Credit Limit.

An Applicant/Transmission Customer will have two (2) business days from receipt of written notification of a Total Potential Exposure Exceedance (three (3) business days if notification occurs after 12:00 Noon MPT) to remedy the situation in a manner deemed acceptable by the Transmission Provider.

Transmission Service

An Applicant/Transmission Customer that fails to cure a Total Potential Exposure Exceedance within the required cure period may have service suspended (in conformity with FERC requirements) from participating in the Transmission Provider's system and from requesting any future Transmission Service unless and until the Applicant/Transmission Customer's Total Potential Exposure Exceedance is cured.

Corporate Guaranty:

In those cases where an Applicant/Transmission Customer is an affiliate of another entity and would like to utilize the consolidated financial statements and other relevant information of its affiliate/parent for obtaining credit, a signed Corporate Guaranty satisfactory to the Transmission Provider is required. Guarantor will be subject to the same financial review procedures as the Applicant and/or Transmission Customer. The form and substance of the Corporate Guaranty must be reasonably acceptable to the Transmission Provider.

A certificate may be required in support of the Corporate Guaranty that includes a seal of the corporation with the signature of the corporate secretary certifying that the execution, delivery, and performance of the Corporate Guaranty has been duly authorized. Adequate documentation

regarding the signature authority of the person signing the Corporate Guaranty may also be required.

The Guarantor will be subject to periodic financial review for the purpose of monitoring its creditworthiness, and the Corporate Guaranty will obligate the Guarantor to submit all information and documents required of the Applicant and/or Transmission Customer under this Transmission Credit Policy.

Any breach of the Corporate Guaranty by the Guarantor or the requirements of the Guarantor under this Transmission Credit Policy shall be deemed a default under the Tariff by the Transmission Customer. A breach of this Transmission Credit Policy and a default under the Tariff shall also occur if the Corporate Guaranty (when applicable) expires or terminates or the Guarantor disaffirms, disclaims, repudiates, rejects or challenges the validity of all or any part of the Corporate Guaranty.

Acceptable Forms of Financial Security:

Applicants and/or Transmission Customers who provide Financial Security under the terms of this Transmission Credit Policy may submit Financial Security in the form of cash deposit or Irrevocable Standby Letter of Credit. All of the above instruments may be submitted separately or in combination to constitute the full amount of any required Financial Security.

Any failure of the Applicant/Transmission Customer to provide and/or maintain the required Financial Security under this Transmission Credit Policy shall be deemed a breach of the Transmission Credit Policy and subject to applicable cure periods prior to becoming a default.

Cash Deposit:

The amount of any cash deposit will be determined by the Transmission Provider in conformity with the Transmission Credit Policy. Transmission Provider may require Applicant/Transmission Customer to provide a cash collateral agreement and/or any other necessary documentation needed for Transmission Provider to perfect their security interest in the collateral.

Irrevocable Standby Letter of Credit:

An Irrevocable Standby Letter of Credit for the value of Financial Security required by the Transmission Provider may be submitted as a form of satisfactory Financial Security. The financial institution issuing the Letter of Credit must have a minimum senior unsecured long-term debt (not supported by third party enhancement) rating of A- by S&P, and A3 by Moody's (if both are available). Additionally, the form of the Letter of Credit must also be satisfactory to Transmission Provider. All costs associated with obtaining the Letter of Credit will be the sole responsibility of the Applicant and/or Transmission Customer. The Letter of Credit must automatically renew each year unless the issuing financial institution provides a notice to the Transmission Provider at least one hundred twenty (120) days prior to its expiration date stating its decision not to renew the Letter of Credit. If it is not renewed, but still required, other acceptable Financial Security must be provided.

Positive Material Change in Financial Condition:

If there is a positive Material Change in the financial condition of the Applicant/Transmission Customer, a significant reduction in the Total Potential Exposure, or any other change that the Applicant/Transmission Customer believes may warrant an increase in the Applicant/Transmission Customer's Unsecured Credit Limit and/or a reduction in the Financial Security provided by the Applicant/Transmission Customer, they may request a reevaluation of their Unsecured Credit Limit and/or the level of their Financial Security. The Transmission Provider will make reasonable efforts to respond within ten (10) business days of such a written request.

Defaults:

Any violation of any provision of this Transmission Credit Policy as it may be amended from time to time, unless cured within any applicable cure period, shall be a default under this Transmission Credit Policy.

ATTACHMENT R – PSCo

Transmission Planning Process of Public Service Company of Colorado

I. Overview of the PSCo Transmission Planning Process

Public Service Company of Colorado ("PSCo" or the "Company") is a vertically integrated public utility engaged in the business of generating, transmitting and distributing electricity in the state of Colorado in the Western Interconnection. PSCo provides Point-to-Point ("PTP") and Network Integration Transmission Services ("NITS") under the Xcel Energy Operating Companies' Joint Open Access Transmission Tariff ("Joint OATT") and non-OATT transmission services pursuant to certain grandfathered agreements ("GFAs"). The native loads of PSCo are subject to the non-rate terms and conditions of the Joint OATT.

PSCo's transmission planning process is intended to facilitate the development of electric infrastructure that maintains reliability, responds to service requests and meets load growth, and is based on the following objectives:

- Maintain reliable electric service.
- Improve the efficiency of electric system operations, including the provision of open and non-discriminatory access to its transmission facilities.
- Identify and promote new investments in transmission infrastructure in a coordinated, open, transparent and participatory manner.

The transmission planning process conducted by PSCo includes a series of open planning meetings that allows interested parties, including, but not limited to, NITS and PTP customers, sponsors of transmission solutions, generation solutions and solutions utilizing demand response resources, interconnected transmission providers, state and local regulatory bodies and other stakeholders (jointly, "Stakeholders"), input into and participation in all stages of development of the PSCo transmission plan.

In addition to its local transmission planning process, PSCo coordinates its transmission planning with other transmission providers and Stakeholders in the Rocky Mountain region, and the Western Interconnection as a whole, through its active participation in the Colorado Coordinated Planning Group ("CCPG"), membership in WestConnect, membership in the Western Electricity Coordinating Council ("WECC"), and participation in the WECC Transmission Expansion Planning Policy Committee ("TEPPC") and its Technical Advisory Subcommittee ("TAS") and the WECC Planning Coordination Committee ("PCC") and its Technical Studies Subcommittee ("TSS"). PSCo's participation and regional planning through WestConnect and the WECC TEPPC is set forth in Parts III and IV of Attachment R-PSCo. PSCo's participation in interregional planning in the United States portion of the Western Interconnection through WestConnect is set forth in Part VII.

As described in Part III hereof, pursuant to the WestConnect Project Agreement for Subregional Transmission Planning ("WestConnect STP Project Agreement"), the subregional planning groups within the WestConnect footprint, assisted by the WestConnect planning manager formed the WestConnect Planning Management Committee to comply with the requirements of

Order No. 890 and Order No. 1000 and coordinate with other Western Interconnection transmission providers and their regional and subregional planning groups through TEPPC. TEPPC provides for the development and maintenance of an economic transmission study database for the entire Western Interconnection and performs annual congestion studies at the Western Interconnection level.

II. PSCo Local Transmission Planning

Participation in PSCo's local transmission planning process is open to all affected parties, including but not limited to all PTP and NITS transmission and interconnection service customers, sponsors of transmission solutions, generation solutions, and solutions utilizing demand response resources, state and local authorities, and other Stakeholders.

A. Confidential or Proprietary Information

PSCo's transmission planning studies may include base case data that are WECC proprietary data or classified as Critical Energy Infrastructure Information ("CEII") by the Federal Energy Regulatory Commission ("FERC" or "Commission"). A Stakeholder must hold membership in, or execute a non-disclosure agreement with, WECC in order to obtain requested base case data from PSCo. (See PSCo Attachment R Hyperlinks List posted on the PSCo OASIS [www.oatioasis.com/PSCo/]). A Stakeholder may obtain PSCo transmission planning information classified as CEII from PSCo upon execution of a non-disclosure agreement with PSCo.

B. Types of Planning Studies

1. Reliability Planning Studies

Reliability planning studies are performed to ensure that all NITS and PTP customer and PSCo retail native load customer requirements for planned loads and resources, including demand response resources, are met for each year of the ten year planning horizon, and that all North American Electric Reliability Corporation ("NERC"), WECC, and local Reliability Standards are met. These reliability planning studies shall be coordinated with WestConnect and other regional transmission planning organizations as appropriate. The Reliability Planning Study Process is described below in Section C.

2. Economic Planning Studies

The purpose of economic planning studies is to identify significant and recurring congestion on the PSCo transmission system and/or address the integration of new resources and/or loads. Such studies may analyze any, or all, of the following: (i) the location and magnitude of the congestion, (ii) possible remedies for the elimination of the congestion, (iii) the associated costs of congestion, (iv) the costs associated with relieving congestion through system enhancements (or other means), and, as appropriate (v) the economic impacts of integrating new resources or/and loads. The process for requesting and conducting Economic Planning Studies is discussed in Section D below.

3. Public Policy Requirements

For purposes of this Attachment R-PSCo, "Public Policy Requirements" means those requirements enacted by state or federal laws or regulations, including those enacted by local governmental entities, such as a municipality or county. Public Policy Requirements,

as applicable, are incorporated into the load forecasts and/or are modeled in the local planning studies. For example, PSCo considers Public Policy Requirements in accordance with the Colorado renewable energy standard and resource adequacy plans that are consistent with the Colorado Electric Resource Plan. Proposed public policy (public policy proposed before a governmental authority but not yet enacted) may be studied if time and resources permit.

C. PSCo Reliability Transmission Planning Study Process

1. Transmission Plan Needs Assessment

PSCo's transmission planning process consists of an assessment of the following needs:

- To provide adequate transmission to access sufficient resources in order to reliably and economically serve retail and wholesale loads.
- Where feasible, to integrate proposed alternatives such as demand response resources that could meet or mitigate the need for transmission additions or upgrades.
- To support PSCo's local transmission and sub-transmission systems.
- To provide for interconnections for new generation resources and load service.
- To coordinate new transmission-to-transmission interconnections with other transmission systems.
- To accommodate requests for long-term transmission access.
- To consider local transmission needs driven by Public Policy Requirements.

2. PSCo's Transmission Planning Cycle

a. Calendar Year Planning Cycle

PSCo conducts its local transmission planning on a calendar year cycle for a ten year planning horizon.

b. Annually Updated Ten Year Transmission Plan

PSCo updates its ten year transmission plan annually. The results are summarized in the WestConnect Annual Ten-Year Transmission Plan, which is posted to the WestConnect website every February. In addition, PSCo also files a listing of significant projects with the Colorado Public Utilities Commission ("CoPUC") at the end of April each year as required by CoPUC Rule 3206. PSCo provides summaries of its transmission plans at Stakeholder meetings in the 1st and 4th quarters of the year.

c. Biennial Transmission Plans (CoPUC Rule 3627)

PSCo files a 10-year Transmission Plan and a 20-year Scenario Analysis in accordance with CoPUC Rule 3627. These plans are posted on the WestConnect website under the CCPG section.

3. Transmission Customer's Responsibility for Providing Data

a. Use of Customer Data

PSCo uses information provided by its transmission customers to, among other things, assess network load and resource projections (including demand response resources), transmission needs, in-service dates and retirements for generation resources on PSCo's system, and to update interregional and regional models used to conduct planning studies.

b. Submission of Data by NITS and PTP Transmission Customers

NITS and PTP Customers are required to submit their projected network load and network resources (including demand response resources) for the upcoming ten year period, pursuant to the Joint OATT. NITS and PTP customers shall also be required to provide the additional data listed in sections d.(iii) and (iv) below, pursuant to the Joint OATT and pursuant to any contractual agreements, by September 1 each year.

c. Submission of Data by Other Transmission Customers

To maximize the effectiveness of the PSCo planning process, it is essential that all other transmission customers provide their ten year needs in the form of relevant data for inclusion in the PSCo transmission planning process. The information must be submitted by September 1 each year in order to be included in the following year's planning process.

d. Transmission Customer Data to be Submitted

To the maximum extent practical and consistent with protection of proprietary or confidential information, data submitted by NITS customers and PTP customers should provide the following information for the ten year planning horizon:

(i) Generators – planned additions or upgrades (including status and expected in-service dates), planned retirements, planned permanent derates, and environmental restrictions.

(ii) Demand response resources – existing and planned demand resources and their impacts on demand and peak demand.

(iii) NITS customers – forecast information for load and resource requirements over the planning horizon and identification of generation resources and demand response reductions.

(iv) PTP customers – projections of need for service over the planning horizon, including transmission capacity, duration, and receipt and delivery points.

e. Notification of Material Changes to Transmission Customer Data

Each transmission customer is responsible for timely submittal of written notice to PSCo of material changes in any of the information previously provided to PSCo related to the transmission customer's load, resources (including demand response resources), or other aspects of its facilities or operations which may, directly or indirectly, affect PSCo's ability to provide service.

4. Stakeholder Participation in the PSCo Study Process

PSCo shall conduct at least two open public planning meetings each year that will allow Stakeholders to participate in a coordinated, nondiscriminatory process for development of the PSCo local transmission plan. The meetings shall be in coordination with the process to develop its ten year transmission plan and coordinated with the WestConnect and CCPG meetings and study processes.

a. First Open Meeting

The first open meeting shall be held in the 1st quarter of the year. During the meeting, PSCo shall:

(i) review its current study plan with Stakeholders;

(ii) provide an opportunity for NITS and PTP transmission customers to update the load, resource (including demand response resources), and other data submitted by September 1 of the prior year;

(iii) provide an opportunity for Stakeholder input on any aspect of PSCo's current study plan, including, but not limited to, methodology, study inputs, Public Policy Requirements, potential Stakeholder-suggested transmission needs driven by Public Policy Requirements, and study results;

(iv) review any Stakeholder proposals previously submitted to PSCo for study plan alternatives, and invite the submittal of additional Stakeholder study plans for review and discussion;

(v) provide a forum for PSCo to better understand the specific electric transmission interests of Stakeholders;

(vi) provide updates on PSCo's planned projects; and

(vii) provide Stakeholders an opportunity to participate in development of the scope of studies for the annual ten year assessments.

After the 1st quarter meeting but not less than thirty (30) days before the 4th quarter meeting, PSCo will post on its OASIS an explanation of those transmission needs driven by Public Policy Requirements that have been identified for evaluation for potential solutions in the local transmission planning process and an explanation of

why any suggested transmission needs driven by Public Policy Requirements will not be evaluated.

b. Second Open Meeting

The second open meeting will be held in the 4th quarter of the year. In addition to providing updates on the status of the items discussed in the previous 1st quarter meeting, PSCo shall:

(i) provide Stakeholders with the results of the ten year assessments;

(ii) review and discuss study request(s) received during the previous year by PSCo with Stakeholders; and

(iii) solicit comments for the following calendar year studies.

c. Additional Open Meetings

Additional open meetings shall be held if necessary to accomplish the above objectives. The timing of the scheduled 1st quarter and 4th quarter meetings may change, if needed to coordinate with CCPG and WestConnect meetings.

d. Posting of Meeting Notices

All Stakeholder meeting notices, including date, time, place and draft meeting agenda, shall be posted on the PSCo OASIS and WestConnect websites (See PSCo Attachment R Hyperlinks List posted on the PSCo OASIS [www.oatioasis.com/PSCo/]) and circulated to PSCo's transmission planning distribution list by email at least 30 calendar days prior to a PSCo public planning meeting.

e. Posting of Study Plans and Planning Results

Study plans and planning results shall be posted on the PSCo OASIS and WestConnect website. (See PSCo Attachment R Hyperlinks List posted on the PSCo OASIS [www.oatioasis.com/PSCo/]).

f. Electronic Input and Comments

Stakeholders and interested parties are also encouraged to provide input, comments, advice and questions on PSCo's transmission planning process at any time by sending e-mails to the contact noted on the PSCo OASIS. (See PSCo Attachment R Hyperlinks List posted on the PSCo OASIS [www.oatioasis.com/PSCo/]).

g. PSCo Distribution List

All existing PSCo customers (NITS, PTP, GFA, and generation interconnection) may, upon request, be included on PSCo's distribution list and actively notified via e-mail of all upcoming PSCo public planning meetings. Any other Stakeholder may be included on PSCo's e-mail distribution list by submitting its information to the

PSCo Point of Contact identified on the PSCo OASIS. (See PSCo Attachment R Hyperlinks List posted on the PSCo OASIS [www.oatioasis.com/PSCo/]).

h. Posting of Meeting Documents

PSCo shall post all meeting-related notes, documents and draft or final reports on the PSCo OASIS and on the WestConnect websites. (See PSCo Attachment R Hyperlinks List posted on the PSCo OASIS [www.oatioasis.com/PSCo/]).

i. Posting of Public Documents

In order to permit all Stakeholders access to the information posted on the PSCo OASIS and WestConnect websites, only public information shall be shared, and public business conducted, in the PSCo open public planning meetings.

5. Coordination of PSCo Study Cycle with WestConnect Study Cycle

PSCo shall coordinate the timing of its transmission planning study process with the development of the assumptions, database, and power flow cases performed within WestConnect, which is open to participation by all interested Stakeholders.

6. PSCo Point of Contact for Questions on PSCo's Transmission Planning Process

PSCo shall identify a Point of Contact on the PSCo OASIS to respond to Stakeholder questions regarding modeling, criteria, assumptions, and data underlying reliability planning studies. (See PSCo Attachment R Hyperlinks List posted on the PSCo OASIS [www.oatioasis.com/PSCo/]).

7. PSCo Transmission Planning Study Criteria and Guidelines

Stakeholders should refer to the Xcel Energy Interconnection Guidelines for PSCo planning criteria, guidelines and assumptions. (See PSCo Attachment R Hyperlinks List posted on the PSCo OASIS [www.oatioasis.com/PSCo/]).

8. Comparability and Evaluation of Alternative Solutions

PSCo planning procedures recognize that its customers need to address transmission system requirements to meet Reliability Standards, Public Policy Requirements, which include state renewable portfolio standards, state resource adequacy and demand response requirements, and other similar regulatory programs that could include treatment of customer demand response resources. PSCo shall consider verified demand response, if available, when evaluating transmission project alternatives in the local study planning process. PSCo shall consider alternative solutions to address these needs from sponsors of transmission, generation and demand resources. In particular, alternative solutions shall be evaluated against each other based on a comparison of their effectiveness of performance and relative economics. In evaluating alternatives, including demand responses and transmission alternatives, PSCo shall evaluate alternatives on the basis of: (1) ability to mitigate any criteria or NERC Reliability Standard issues; (2) ability to mitigate those issues over the time frames of the study; (3) comparison of the capital costs of the demand response, as compared to other transmission alternatives; (4) the technical, financial and operational feasibility of any proposed alternatives; and (5)

comparison of any operational benefits or issues between demand responses or transmission alternatives. From this comparison, the most appropriate project alternative can be selected.

D. PSCo Economic Study Process

PSCo shall facilitate priority local[1] Economic Planning Studies for the PSCo transmission system, pursuant to the procedures in this Attachment R-PSCo. Regional Economic Planning Studies shall be performed by WestConnect and/or TEPPC, pursuant to Part III of this Attachment R-PSCo. (See PSCo Attachment R Hyperlinks List posted on the PSCo OASIS [www.oatioasis.com/PSCo/]).

Note 1: PSCo shall determine which studies are "local"; Stakeholders shall then choose which local studies are high priority studies.

1. Requesting Economic Planning Studies

Any PSCo transmission customer or other Stakeholder, including sponsors of transmission solutions, generation solutions and solutions utilizing demand response resources ("Requester"), may submit a study request for an economic planning study directly to PSCo, WestConnect, or TEPPC. Requests submitted to WestConnect or TEPPC will be processed pursuant to Part III.

For requests submitted to PSCo, the Requester must submit its study request(s) no later than September 1 each year for the study request(s) to be reviewed by PSCo and discussed with Stakeholders at the 4th quarter open meeting of that year. All such economic planning study requests must be submitted electronically to the PSCo Transmission Reliability and Assessment Contact. (See PSCo Attachment R Hyperlinks List posted on the PSCo OASIS [www.oatioasis.com/PSCo/]). Study requests that are developed by PSCo by September 1 of any year also shall be discussed with Stakeholders at the 4th quarter open meeting of that year. PSCo shall coordinate the timing of its economic planning study cycle with the WestConnect and TEPPC processes.

2. Process for Handling Economic Transmission Planning Study Requests Received by PSCo

a. Review of Economic Transmission Study Requests

All economic planning study requests received by September 1 shall be reviewed by PSCo prior to the 4th quarter open planning meeting. PSCo shall seek Stakeholder input on those requests at the 4th quarter open planning meeting. At the meeting, PSCo shall state which requests it has determined are local. Stakeholders shall then choose whether the local study requests should be considered a local priority request and facilitated by PSCo.

If PSCo has determined that the study request is regional or interregional, PSCo shall transfer the request to WestConnect as discussed in Part III herein or TEPPC for consideration as a priority request at TEPPC's Stakeholder meeting. The criteria TEPPC utilizes to prioritize requests for regional economic studies are posted on the TEPPC page of the WECC website. (See PSCo Attachment R Hyperlinks List posted on the PSCo OASIS [www.oatioasis.com/PSCo/]).

b. Criteria Used to Determine Whether an Economic Planning Study Request is a Local Economic Planning Study Request

Based in part on the number and type of economic planning study requests received, PSCo shall consider the following criteria to determine if the study request is for a local economic planning study or a regional economic planning study:

(i) Whether the study request affects the interconnected transmission system or only PSCo's transmission system.

(ii) Whether the potential remedies are confined to and only resolvable within PSCo's local transmission system.

c. Criteria Used to Determine Whether a Local Economic Planning Study Request is a Priority Request

PSCo and Stakeholders shall consider the following criteria to determine whether a local economic planning study request is a priority request:

(i) Which portion(s) of the PSCo local transmission system shall be under consideration in the study.

(ii) Whether the request raises fundamental design issues of interest to multiple parties.

(iii) Whether the request raises policy issues of national, regional, or state interest, e.g., with respect to access to renewable power, and location of both conventional and renewable resources.

(iv) Whether the objectives of the study can be met by other existing or planned studies.

(v) Whether the study shall provide information of broad value to customers, regulators, transmission providers and other interested Stakeholders.

(vi) Whether similar requests for studies or scenarios can be represented generically if the projects are generally electrically equivalent.

(vii) Whether requests can be aggregated into energy or load aggregation zones with generic transmission expansion between them.

(viii) Whether the study request requires the use of production cost simulation or whether it can be better addressed through technical studies, i.e., power flow and stability analysis.

d. Priority Local Economic Planning Study Requests

If PSCo and Stakeholders determine that a local economic planning study request is a priority local request, PSCo shall facilitate the study and coordinate assumptions and results with its transmission customers, Stakeholders and interconnected transmission providers. PSCo shall have no obligation to facilitate more than three priority local economic planning studies per calendar year. PSCo reserves the right to reasonably limit the scope of the priority local economic planning studies, based on the cohesiveness of the study request as a single study, likely public merit addressing congestion and/or integration of new resources and loads on an aggregated basis, and study cost. If PSCo receives more than three requests for local economic planning studies that are determined to be priority local requests, Stakeholders and PSCo shall prioritize the requests to determine which three PSCo shall facilitate. PSCo may facilitate one or more additional studies (beyond three) at its sole discretion. If PSCo elects not to perform such additional studies, PSCo may assist the Requester in having a third party perform the local economic planning study at the Requester's expense. The Requester must use the TEPPC economic study data base, and PSCo shall assist the Requester (or such third party) in ensuring that the study is coordinated as necessary through local, regional, or interregional planning groups.

e. TEPPC Master List

If an economic planning study request is not a local study request, PSCo shall forward the request to WestConnect or TEPPC for inclusion in the TEPPC Master List of economic planning studies for the Western Interconnection and for consideration by TEPPC as a priority request. The TEPPC Master List is publicly available. (See PSCo Attachment R Hyperlinks List posted on the PSCo OASIS [www.oatioasis.com/PSCo/]).

3. Process for Handling Economic Study Requests Received by TEPPC

TEPPC reviews economic planning study requests received from either transmission providers or from Requesters directly. TEPPC reviews such study requests during its open Stakeholder meeting and, together with its Stakeholders, prioritizes requests for economic planning studies. PSCo shall participate in the TEPPC prioritization process and provide input as to whether a study request should be included in the TEPPC study plan. The Requester is also encouraged to participate and provide input in the TEPPC prioritization process. More detail regarding the TEPPC economic planning study process is available in the TEPPC Transmission Planning Protocol. (See PSCo Attachment R Hyperlinks List posted on the PSCo OASIS [www.oatioasis.com/PSCo/]).

4. Low Priority Economic Study Requests

If either PSCo or TEPPC determines, after review through an open Stakeholder process, that a requested economic planning study is not a priority study, the Requester may request PSCo's assistance in having a third party perform the economic planning analysis at the Requester's expense. PSCo shall have no obligation to fund any low priority economic planning study. The Requester (or such third party) must use the TEPPC economic study database and PSCo shall assist the Requester in ensuring that the study is coordinated as necessary through local or regional planning groups.

5. Clustering Priority Local Economic Planning Studies

Priority local economic planning studies may be studied in clusters. PSCo may decide to study any number of economic planning studies together, either on its own initiative, upon the request of a Requester, or to comply with state regulatory requirements. PSCo shall combine such studies as it deems appropriate. PSCo shall use the following processes to determine whether to cluster priority local economic planning studies:

a. PSCo-Proposed Clusters

In the event that PSCo proposes to cluster certain priority local economic planning studies on any reasonable grounds, including, without limitation, upon its determination that the proposed cluster studies are sufficiently similar, from an electrical perspective, to be feasibly and meaningfully studied as a group, it shall provide notice to each Requester whose study it proposes to include in the cluster study. Each Requester shall be provided the opportunity to opt out of the cluster within ten (10) calendar days of written notice from PSCo.

b. Requester-Proposed Clusters

If a Requester wishes to propose a local economic planning cluster study, prior to submitting the local economic planning study cluster request to PSCo, the Requester must contact all of the other Requesters whose requests it proposes to cluster and obtain their written consent that they are willing to have their request clustered with other identified requests. All such written consent(s) must be provided to PSCo before PSCo shall commence a local economic planning cluster study. PSCo shall reasonably determine whether the local economic planning study requests that the Requester proposes to cluster and for which the other affected Requesters have provided consent, are sufficiently similar, from an electrical perspective, to be feasibly and meaningfully studied together. PSCo reserves the right to reject a Requester-proposed cluster on any reasonable grounds, including, without limitation, upon PSCo's determination that the proposed cluster cannot be feasibly studied as a group, is not likely to provide a result significantly different than separate studies, or if the proposed clustering impairs administration or timely processing of the local economic planning study process. PSCo shall make the determination whether to reject a proposed cluster, and provide notice of any decision to reject, within twenty (20) calendar days of receipt of all of the written consents of the Requesters that propose to be clustered.

6. Cost Responsibility for Economic Planning Studies

a. Priority Local Economic Planning Studies

PSCo shall facilitate, at PSCo's cost, up to three priority local economic planning studies per calendar year. Each of the clustered priority local economic planning studies shall be deemed to be a single study. PSCo shall have no obligation to facilitate more than three priority local economic planning studies per calendar year. For local economic planning studies not selected, PSCo may assist the Requester in having a third party perform the economic planning study at the Requester's expense.

b. Priority Regional Economic Planning Studies

Priority regional economic planning studies will be performed by WestConnect as discussed in Part III.

c. Priority Interregional Economic Planning Studies

Priority interregional economic planning studies will be performed by TEPPC and funded by WECC.

d. Other Economic Study Requests

To the extent Requesters of local economic planning studies not selected to be performed at PSCo's cost pursuant to this section wish to have those studies performed, such local economic planning study requests shall be performed at the Requester's expense. PSCo may assist the Requester in finding a third party to perform the studies.

7. Exchange of Data Unique to Economic Planning Studies

a. Data Used for Economic Planning Studies

PSCo obtains all data used for its economic planning studies from the TEPPC data base.

b. Request for Base Case Data

Any Requester's request for detailed base case data must be submitted to WECC in accordance with the WECC procedures.

c. Posting of Requests for Economic Planning Studies

All requests made to PSCo for economic planning studies and responses to such requests shall be posted on the PSCo OASIS and the WestConnect website (see PSCo Attachment R Hyperlinks List posted on the PSCo OASIS [www.oatioasis.com/PSCo/]), subject to confidentiality requirements.

8. PSCo Point of Contact for Study Requests

PSCo shall identify a Point of Contact on its OASIS to respond to Stakeholder questions regarding modeling, criteria, assumptions, and data underlying economic planning studies. (See PSCo Attachment R Hyperlinks List posted on the PSCo OASIS [www.oatioasis.com/PSCo/]).

E. PSCo Public Policy Requirements Study Process

1. Procedures for Identifying Transmission Needs Driven by Public Policy Requirements

Stakeholders may participate in identifying local transmission needs driven by Public Policy Requirements by contacting PSCo's point of contact noted on the PSCo Attachment R Hyperlinks List posted on the PSCo OASIS [www.oatioasis.com/PSCo/]. In addition,

Stakeholders have the opportunity to offer input or make proposals at PSCo's open meetings held pursuant to this Attachment R-PSCo.

The process by which PSCo is to identify those local transmission needs driven by Public Policy Requirements for which a local transmission solution(s) will be evaluated, out of what may be a larger set of local transmission needs, is to utilize the two communication channels it has in place with Stakeholders, identified above, through which local transmission needs driven by Public Policy Requirements are to be part of the open dialogue: (a) direct electronic communication to the PSCo dedicated point of contact, through which a stakeholder desiring to communicate directly with PSCo transmission planners may offer its views on which local transmission needs are ripe for evaluation for solutions, and (b) through participation in PSCo's open meetings held pursuant to this Attachment R-PSCo.

In selecting those local transmission needs driven by Public Policy Requirements that will be evaluated for solutions in the current planning cycle, PSCo is to consider, on a non-discriminatory basis, factors, including but not limited to, the following:

(i) Whether the Public Policy Requirement is driving a local transmission need that can be reasonably identified in the current planning cycle;
(ii) The feasibility of addressing the local transmission need driven by the Public Policy Requirement in the current planning cycle;
(iii) The factual basis supporting the local transmission need driven by the Public Policy Requirement; and
(iv) Whether a Public Policy Requirement has been identified for which a local transmission need has not yet materialized, or for which there may exist a local transmission need but the development of a solution to that need is premature. One example is a renewables portfolio increase that is enacted for implementation in a future year, and for which the process by which the renewable resource is to be identified, selected, and sited under the governing state-regulated resource adequacy process has not yet begun (making it premature to identify the location and scope of the local transmission need and/or the appropriate solution for the need).

No single factor shall necessarily be determinative in selecting among the potential transmission needs driven by Public Policy Requirements.

PSCo is not required to identify any particular set of local transmission needs driven by Public Policy Requirements, but if PSCo chooses not to identify any stakeholder-suggested local transmission need driven by a Public Policy Requirement as a transmission need for which solutions will be evaluated in the local transmission planning process, PSCo will post on its OASIS an explanation of why the suggested transmission need will not be evaluated. PSCo's OASIS posting will include both an explanation of those local transmission needs driven by Public Policy Requirements that have been identified for evaluation for potential solutions in the local transmission planning process, and an explanation why other stakeholder-suggested transmission needs driven by Public Policy Requirements were not identified for further evaluation. After considering the input of stakeholders, PSCo is to determine whether to move forward with the identification of a local solution to a particular local need driven by Public Policy Requirements.

2. <u>Procedures for Evaluating Solutions to Identified Transmission Needs</u>

Stakeholders may use the two communication avenues identified above (direct electronic communication via PSCo's point of contact and/or participation in PSCo's open meetings) to participate in the evaluation of solutions to identified local transmission needs driven by Public Policy Requirements that are selected by PSCo for further evaluation. Stakeholders may provide comments on proposed solutions or may submit other proposed solutions to such local transmission needs.

After seeking the input of Stakeholders, PSCo is to determine whether to select a particular local solution in its local transmission plan. PSCo will post its local transmission plan, which will include any such solutions selected.

The procedures for evaluating potential solutions to the identified local transmission needs driven by Public Policy Requirements are the same as those procedures used to evaluate any other project proposed in the local planning process.

3. Posting of Public Policy Needs

PSCo will maintain on its OASIS (i) a list of all local transmission needs identified that are driven by Public Policy Requirements and that are included in the studies for the current local planning cycle; and (ii) an explanation of why other suggested transmission needs driven by Public Policy Requirements will not be evaluated.

III. Regional Transmission Planning Process

In accordance with the Commission's regulations, this Attachment to the PSCo OATT implements the requirements for regional planning in accordance with Order No. 1000 and Order No. 890. PSCo engages in regional Planning and Coordination within the WestConnect regional process ("Regional Planning Process"), which also includes PSCo's participation in interregional planning in the United States portion of the Western Interconnection through its participation in WestConnect.

The purpose of the Regional Planning Process is to produce a regional transmission plan (the "Regional Plan") and provide a process for evaluating projects submitted for cost allocation in accordance with the provisions of this Attachment R-PSCo and those business practices adopted by WestConnect in the WestConnect Regional Planning Process Business Practice Manual, as may be amended from time to time, available on the WestConnect website ("Business Practice Manual").

A. Overview

The WestConnect Planning Region is defined by the Transmission Owners and Transmission Provider members (referred to generally as "Transmission Owners") participating in the Regional Planning Process and for whom WestConnect is conducting regional planning. The service areas of the Transmission Owners consist of all or portions of nine states: Arizona, California, Colorado, Nebraska, New Mexico, Nevada, South Dakota, Texas and Wyoming. Non-public utilities are invited to participate in the Regional Planning Process.

Following the effective date of PSCo's September 20, 2013 Order No. 1000 compliance filing ("Effective Date"), the WestConnect Order No. 1000 regional transmission planning management committee (the "Planning Management Committee" or "PMC") will commence the Regional

Planning Process. This committee will be responsible for administering the Regional Planning Process. In order to align its regional process with the western interregional coordination process, it is WestConnect's intent to begin its biennial process in even-numbered years. Should FERC acceptance of WestConnect's compliance filing result in an effective date in an odd-numbered year, WestConnect will conduct an abbreviated planning process in its first year and begin its biennial process the next year. To effectuate such an abbreviated process, the PMC will develop a study scope for the first year, including project submission deadlines, and post it to the WestConnect website within the first thirty (30) days of the year.

In conjunction with creating the new PMC, the WestConnect members, in consultation with interested Stakeholders, will establish a separate project agreement (the "Planning Participation Agreement") to permit interested Stakeholders to participate in the Regional Planning Process. Although the Regional Planning Process is open to the public, Stakeholders interested in having a voting right in decisions related to the Regional Planning Process will be required to execute the Planning Participation Agreement and any necessary confidentiality agreements.[2] The PMC will implement the Stakeholder-developed Regional Planning Process, which will result in a Regional Plan for the ten-year transmission planning horizon.[3]

PSCo is a party to the WestConnect Project Agreement for Subregional Transmission Planning ("WestConnect STP Project Agreement") (See PSCo Attachment R Hyperlinks List posted on the PSCo OASIS [www.oatioasis.com/[PSCo]/]). The committees formed under the WestConnect STP Project Agreement and the WestConnect Steering Committee have no authority over the PMC and the PMC's decision making in implementing the Regional Planning Process.

Note 2: If the Planning Participation Agreement is terminated, the requirement of becoming a signatory to the Planning Participation Agreement also terminates. In that situation, it would no longer be necessary for an entity to execute the Planning Participation Agreement before engaging in the WestConnect regional planning process, because the PMC will cease performing its functions under this Attachment K upon termination of the Planning Participation Agreement.

Note 3: Because the rights and responsibilities of the PMC terminate when the Planning Participation Agreement terminates, PSCo, as a Transmission Provider subject to Order No. 1000 compliance, will have to satisfy its regulatory compliance through other means. At that time, PSCo will make an appropriate filing with the Commission to demonstrate its continued compliance with Order No. 1000.

1. <u>WestConnect Planning Participation Agreement</u>

Each WestConnect member will be a signatory to the Planning Participation Agreement, which formalizes the members' relationships and establishes obligations, including Transmission Owner coordination of regional transmission planning among the WestConnect participants and the local transmission planning processes, and producing a Regional Plan.

2. <u>Members</u>

WestConnect has two types of members: (i) Transmission Owners that enroll in the WestConnect Planning Region in order to comply with Order No. 1000 planning and cost allocation requirements, as well as Transmission Owners that elect to participate in the WestConnect Regional Planning Process without enrolling for Order No. 1000 cost allocation purposes, and (ii) Stakeholders who wish to have voting input into the methodologies, studies, and decisions made in the execution of those requirements.

a. Joining the WestConnect Planning Region

A Transmission Owner that wishes to enroll or participate in the WestConnect Planning Region may do so by executing the Planning Participation Agreement and paying its share of costs as provided for in the Planning Participation Agreement.

A Stakeholder that wishes to have voting input may join the WestConnect Planning Region by executing the Planning Participation Agreement, paying annual dues, and complying with applicable provisions as outlined in such agreement. For further information regarding membership dues, please see WestConnect's Planning Participation Agreement, located on the WestConnect website[4] and on file with FERC.

Note 4: The Planning Participation Agreement is located at
http://www.westconnect.com/planning_agreement.php

b. Exiting the WestConnect Planning Region

Should a Transmission Owner member wish to exit the WestConnect Planning Region, it must submit notice in accordance with the Planning Participation Agreement and pay its share of any WestConnect expenditures approved prior to providing its formal notice of withdrawal from the WestConnect Planning Region.

Should a Stakeholder wish to exit the WestConnect Planning Region, it may do so by providing notice in accordance with the Planning Participation Agreement. Withdrawing Stakeholders will forfeit any monies or dues paid to the PMC and agree to remit to the PMC any outstanding monies owed to WestConnect prior to their withdrawal being considered official.

c. List of Enrolled Entities

Transmission owners enrolled in the WestConnect Planning Region for purposes of Order No. 1000:

- Arizona Public Service Company
- Black Hills Colorado Electric Utility Company, LP
- Black Hills Power, Inc.
- Cheyenne Light, Fuel, & Power Company
- El Paso Electric Company
- NV Energy, Inc. Operating Companies
- Public Service Company of Colorado
- Public Service Company of New Mexico
- Tucson Electric Power Company
- UNS Electric, Inc.

3. WestConnect Objectives and Procedures for Regional Transmission Planning

The Regional Planning Process will produce a Regional Plan that complies with existing Order No. 890 principles:

a. Coordination

b. Openness
c. Transparency
d. Information exchange
e. Comparability
f. Dispute resolution

PSCo, along with the other Planning Participation Agreement participants, shall work through the Regional Planning Process to integrate its transmission plan with the other WestConnect participant transmission plans into a single ten year Regional Plan for the WestConnect footprint by:

a. Actively coordinating development of the Regional Plan, including incorporating information, as appropriate, from all Stakeholders;

b. Coordinating, developing and updating common base cases to be used for all study efforts within the Regional Planning Process and ensuring that each plan adheres to the methodology and format developed for the Regional Plan;

c. Providing funding for the Regional Planning Process and all planning management functions pursuant to the Planning Participation Agreement;

d. Maintaining a regional planning section on the WestConnect website,[5] where all WestConnect planning information, including meeting notices, meeting minutes, reports, presentations, and other pertinent information is posted;

Note 5: The WestConnect website is located at http://www.westconnect.com.

e. Posting detailed notices of all regional and local planning meeting agendas on the WestConnect website; and

f. Establishing a cost allocation process for regional transmission projects selected in the Regional Planning Process for cost allocation.

B. Roles in the Regional Planning Process

1. PMC Role

The PMC is responsible for bringing transmission planning information together and sharing updates on active projects. The PMC provides an open forum where any Stakeholder interested in the planning of the regional transmission system in the WestConnect footprint can participate and obtain information regarding base cases, plans, and projects and provide input or express its needs as they relate to the transmission system. On a biennial basis and in coordination with its members, Transmission Owners, and other interested Stakeholders, the PMC will develop the Regional Plan. The PMC, after considering the data and comments supplied by customers and other Stakeholders, is to develop a regional transmission plan that treats similarly-situated customers (e.g., network, retail network, and native load) comparably in transmission system planning.

The PMC is charged with development and approval of the Regional Plan. The PMC will be comprised of representatives from each Stakeholder sector. The PMC will be empowered to create and dissolve subcommittees as necessary to facilitate fulfillment of its responsibilities in developing the Regional Plan.

2. Stakeholder Participation and Assistance

Stakeholders may participate in the Regional Planning Process by any one or more of the following ways: (a) joining one of five WestConnect regional transmission planning membership sectors described below; (b) by attending publicly-posted WestConnect regional transmission planning Stakeholder meetings; and/or (c) by submitting project proposals for consideration and evaluation in the Regional Planning Process.

Attendance at meetings is open to all interested Stakeholders. These meetings will include discussion of models, study criteria and assumptions, and progress updates. Formal participation, including voting as allowed by the process, can be achieved through payment of applicable fees and annual dues in accordance with the Planning Participation Agreement. Transmission Owners with a Load Serving Obligation will not be responsible for annual dues because Transmission Owners with a Load Serving Obligation will be the default source of monies to support WestConnect activities beyond dues paid by other organizations.

WestConnect Planning Region members will assist Stakeholders interested in becoming involved in the Regional Planning Process by directing them to appropriate contact persons and websites. (See PSCo Attachment R Hyperlinks List posted on the PSCo OASIS [www.oatioasis.com/PSCo/]). All Stakeholders are encouraged to bring their plans for future generators, loads or transmission services to the WestConnect planning meetings. Each transmission planning cycle will contain a period during which project ideas are accepted for potential inclusion in that cycle's Regional Plan.

3. Forum for Evaluation

The WestConnect Regional Planning Process also provides a forum for transmission project sponsors to introduce their specific projects to interested Stakeholders and potential partners and allows for joint study of these projects by interested parties, coordination with other projects, and project participation, including ownership from other interested parties. This may include evaluation of transmission alternatives or non-transmission alternatives in coordination with the Regional Planning Process.

4. Stakeholder Meetings

WestConnect will hold open Stakeholder meetings on at least a semi-annual basis, or as needed and noticed by the PMC with 30 days advance notice to update Stakeholders about its progress in developing the Regional Plan and to solicit input regarding material matters of process related to the Regional Plan. Notice for such meetings will be posted on the WestConnect website and via email to the Regional Planning Process email distribution list.

The meeting agendas for all WestConnect planning meetings will be sufficiently detailed, posted on the WestConnect website, and circulated in advance of the meetings in order to allow Stakeholders the ability to choose their meeting attendance most efficiently.

5. WestConnect Planning Process Governance

a. Membership Sectors

The Regional Planning Process will be governed by the PMC, which will be tasked with executing the Regional Planning Process and will have authority for approving the Regional Plan. For those entities desiring to be a part of the management of the Regional Planning Process, one of five PMC membership sectors is available:

- Transmission Owners with Load Serving Obligation
- Transmission Customers
- Independent Transmission Developers and Owners
- State Regulatory Commissions
- Key Interest Groups

Only Transmission Owners that have load serving obligations individually or through their members may join the Transmission Owners with Load Serving Obligations membership sector. The Transmission Owners with Load Serving Obligations sector will be comprised of (a) those Transmission Owners that enroll in the WestConnect Planning Region for purposes of Order No. 1000; and (b) those Transmission Owners that elect to participate in the WestConnect Regional Planning Process as Coordinating Transmission Owners.

Except for Public Utilities that are required to comply with Order No. 1000, any entity may join any membership sector for which it qualifies, but may only participate in one membership sector at a time. If a non-public utility is qualified to join the Transmission Owners with Load Serving Obligations sector as well as one or more other sectors, and the non-public utility elects to join a sector other than the Transmission Owners with Load Serving Obligations sector, the PMC will not perform the function of regional transmission planning for that entity. Additionally, if a member of the Transmission Owner with Load Serving Obligations sector owns transmission facilities located in another planning region, the PMC will not perform the function of regional planning for such facilities located in another planning region.

b. Planning Management Committee

The PMC will be empowered to create and dissolve subcommittees as necessary to ensure timely fulfillment of its responsibilities; to assess fees for membership status on the PMC; and to assess fees for projects submitted for evaluation as part of the Regional Planning Process. The PMC is to manage the Regional Planning Process, including approval of the Regional Plan that includes application of regional cost allocation methodologies.

The PMC is to coordinate and have the decision making authority over whether to accept recommendations from the Planning Subcommittee ("PS") and Cost Allocation Subcommittee ("CAS"). The PMC, among other things, is to develop and approve the Regional Plan based on recommendations from the PS and CAS; and develop and approve a scope of work, work plan, and periodic reporting for WestConnect planning functions, including holding a minimum of two Stakeholder informational meetings per year. The PMC is to appoint the chair of the PS and CAS. The chair for each subcommittee

must be a representative of the Transmission Owners with Load Serving Obligations member sector.

The PS responsibilities include, but are not limited to, reviewing and making recommendations to the PMC for development of study plans, establishing base cases, evaluating potential solutions to regional transmission needs, producing and recommending the Regional Plan for PMC approval, and coordinating with the CAS. The PS is to provide public notice of committee meetings and provide opportunities for Stakeholders to provide comments on the process and proposed plan.

The CAS responsibilities include, but are not limited to, performing and/or overseeing the performance of the cost allocation methodology. The CAS also is to review and make recommendations to the PMC for modifying definitions of benefits and cost allocation methodology as necessary to meet WestConnect planning principles on identification of beneficiaries and cost allocation. The CAS is to review and recommend projects to the PMC for purposes of cost allocation identified in the Regional Planning Process. The CAS is to provide public notice of committee meetings and provide opportunities for Stakeholders to provide comments on the process and proposed cost allocation.

All actions of the PMC (including approval of the Regional Plan) will be made possible by satisfying either of the following requirements:

- 75% of the members voting of at least three (3) sectors approving a motion, where one of the three sectors approving is the Transmission Owners with Load Serving Obligation sector; or
- 75% of the members voting of the four member sectors other than the Transmission Owners with Load Serving Obligation sector approving a motion and two-thirds (2/3) of the members voting of the Transmission Owners with Load Serving Obligation sector approving a motion.

Each entity within a membership sector is entitled to one vote on items presented for decision.

Any closed executive sessions of the PMC will be to address matters outside of the development of the Regional Planning Process, including matters involving contracts, personnel, financial matters, or legal matters such as, but not limited to, litigation (whether active or threatened).

C. Submission of Data by Customers, Transmission Developers, and Transmission Owners

When stakeholder feedback on modeling assumptions is requested, the data submittal period for such feedback will be established by the PMC. In all cases, requests for submittal of data from WestConnect members and Stakeholders will be followed by a data submittal window lasting no less than thirty (30) days from the date of such requests. In addition, consistent with the Regional Planning Process, any interested Stakeholder may submit project ideas for consideration in the Regional Plan without a need for that Stakeholder to qualify for a project submittal for purposes of cost allocation. Specific project submittals are treated differently than generalized project ideas. For any project submittal seeking study by the PMC in the Regional Planning Process to address a regional need identified by the PMC (without regard to whether the project seeks cost allocation), a project submittal deposit will be collected and made subject to later true-up based upon the actual cost of the study(ies) performed. Project submittals are to be accepted through the fifth (5th)

quarter of the planning cycle (or first (1st) quarter of the second (2nd) year), and are addressed in Section III.C.5 of this Attachment R-PSCo. A timeline detailing the timing and notice for submission of information and input can be found in Exhibit 1 of this Attachment R-PSCo.

1. Transmission Customers

Transmission customers shall generally submit their load forecast and other relevant data through the WestConnect member's (e.g., PSCo's) local transmission planning process. However, from time to time, there may be a need for transmission customers participating in the Regional Planning Process to submit data directly to WestConnect. This data may include, but is not limited to load forecasts, generation resource plans, demand side management resources, proposed transmission upgrade recommendations, and feedback regarding certain assumptions in the planning process.

No less than thirty (30) days' notice will be given for customers to submit any required data and data submissions will generally be able to be made via email or by posting information to a designated website.

2. Independent Transmission Developers and Owners

Transmission Developers are entities with project ideas they wish to submit into the Regional Planning Process. These may include project submittals that the developer wishes to be considered to address an identified regional need (whether or not the project is eligible for regional cost allocation).

Each regional transmission planning cycle will include a submission period for project ideas as described in Section III.C.5 below. Notice of the submission period will be posted on the WestConnect website and will also be made via email to WestConnect Stakeholders. The submission period will last for no less than thirty (30) days and during this time, any entity that wishes to submit a transmission project for consideration in the Regional Planning Process to address an identified regional need may do so.

Projects proposed by Independent Transmission Developers and Owners are subject to the same Reliability Standards as projects submitted by Transmission Owners with Load Serving Obligations. The project developer shall register with NERC and WECC in accordance with the applicable registration rules in the NERC Rules of Procedure. In addition, project developers shall observe and comply with regional requirements as established by the applicable regional reliability organizations, and all local, state, regional, and federal requirements.

3. Merchant Transmission Developers

Merchant Transmission Developers are entities pursuing completion of projects that do not wish to have their projects considered for regional cost allocation. Nonetheless, coordination between merchant projects and the Regional Planning Process is necessary to effect a coordinated Regional Plan that considers all system needs.

Each regional transmission planning cycle will include a submission period for project submittals to address an identified regional need, as described in Section III.C.5 below. Notice of the submission period will be posted on the WestConnect website and will also be made via email to WestConnect Stakeholders. In addition, it is necessary for merchant

transmission developers to provide adequate information and data to allow the PMC to assess the potential reliability and operational impacts of the merchant transmission developer's proposed transmission facilities on other systems in the region. The submission period will last for no less than thirty (30) days and during this time sponsors of merchant transmission projects that are believed to impact the WestConnect transmission system will be asked to provide certain project information.

Projects proposed by Merchant Transmission Developers are subject to the same Reliability Standards as projects submitted by Transmission Owners with Load Serving Obligations. The project developer is responsible for properly registering with NERC and WECC in accordance with the applicable registration rules in the NERC Rules of Procedure. In addition, project developers shall observe and comply with regional requirements as established by the applicable regional reliability organization and all local, state, regional, and federal requirements.

4. Transmission Owners with Load Serving Obligation

Transmission Owners that are members of the WestConnect Planning Region are responsible for providing all necessary system information to the Regional Planning Process.

At the beginning of each regional transmission planning cycle, Transmission Owners that are participating in the Regional Planning Process shall be responsible for verifying the accuracy of any data (including, but not limited to system topology and project proposal information) they have previously submitted. Transmission Owners shall also be required to submit all relevant data for any new projects being proposed for inclusion in the Regional Plan to address an identified regional need in accordance with Section III.C.5 below. Transmission Owners shall also be responsible for submitting any project plans developed through their local transmission planning processes for inclusion in the Regional Plan models.

5. Transmission Project Submittals

All submittals of transmission projects to address an identified regional need, without regard to whether or not the project seeks regional cost allocation, are to contain the information set forth below, together with the identified deposit for study costs, and be submitted timely within the posted submittal period in order for the project submittal to be eligible for evaluation in the Regional Planning Process. A single project submittal may not seek multiple study requests. To the extent a project proponent seeks to have its project studied under a variety of alternative project assumptions, the individual alternatives must be submitted as individual project submittals. To be eligible to propose a project for selection in the Regional Plan, a project proponent must also be an active member in good standing within one of the five PMC membership sectors described above in Section III.B.5.a:

- Submitting entity contact information
- Explanation of how the project is a more efficient or cost-effective solution to regional transmission needs*
- A detailed project description including, but not limited to, the following:
    - Scope
    - Points of interconnection to existing (or planned) system

  - Operating Voltage and Alternating Current or Direct Current status
  - Circuit Configuration (Single, Double, Double-Circuit capable, etc.)
  - Impedance Information
  - Approximate circuit mileage
- Description of any special facilities (series capacitors, phase shifting transformers, etc.) required for the project
- Diagram showing geographical location and preferred route; general description of permitting challenges
- Estimated Project Cost and description of basis for that cost*
- Any independent study work of or relevant to the project
- Any WECC study work of or relevant to the project
- Status within the WECC path rating process
- The project in-service date
- Change files to add the project to a standard system power flow model
- Description of plan for post-construction maintenance and operation of the proposed line
- A $25,000 deposit to support the cost of relevant study work, subject to true-up (up or down) based upon the actual cost of the study(ies)*. The true-up will include interest on the difference between the deposit and the actual cost, with such interest calculated in accordance with section 35.19a(a)(2) of FERC's regulations. A description of the costs to which the deposit was applied, how the costs were calculated, and an accounting of the costs will be provided to each project sponsor within 30 calendar days of the completion of the study. Dispute resolution is addressed pursuant to Section V.
- Comparison Risk Score from WECC Environmental Data Task Force, if available
- Impacts to other regions. The applicant must provide transmission system impacts studies showing system reliability impacts to neighboring transmission systems or another transmission planning region. The information should identify all costs associated with any required upgrades to mitigate adverse impacts on other transmission systems.*

  If impact studies and costs are not available at the time of submittal, the project proponent may request that impact studies be performed, at the project proponent's expense, as part of the analysis to determine whether the project is the more efficient or cost-effective solution. Requests for transmission system impact studies are approved through the PMC depending on whether the project proponent provides funding for the analysis. The PMC will provide, subject to appropriate confidentiality and CEII restrictions, the information in the possession of the PMC that an applicant needs to perform the transmission system impact study and to identify the costs associated with any upgrades required to mitigate adverse impacts.

*Merchant transmission developers are exempt from these requirements.

There is to be an open submission period for project proposals to address identified regional needs. Notice of the submission period will be posted on the WestConnect website and will also be made via email to WestConnect Stakeholders. The submission period will last for no less than thirty (30) days and will end by the fifth (5th) quarter of the WestConnect planning cycle (or first (1st) quarter of the second (2nd) year of the planning cycle). Proposals submitted outside that window will not be considered. The PMC will

have the authority to determine the completeness of a project submittal. Project submittals deemed incomplete will be granted a reasonable opportunity to cure any deficiencies identified in writing by the PMC.

Any Stakeholder wishing to present a project submittal to address an identified regional need shall be required to submit the data listed above for the project to be considered in the Regional Planning Process. Should the submitting Stakeholder believe certain information is not necessary, it shall identify the information it believes is not necessary and shall provide a justification for its conclusion that the information is not necessary. The PMC retains the sole authority for determining completeness of the information submittal. After the completion of the project submittal period, the PMC will post a document on the WestConnect website detailing why any projects were rejected as incomplete. Upon posting of the document, any project submittal rejected as incomplete will be given a reasonable opportunity to cure the reason(s) it was rejected to the satisfaction of the PMC in its sole discretion.

6. Submission of Non-Transmission Alternative Projects

Any Stakeholder may submit projects proposing non-transmission alternatives to address an identified regional need for evaluation under the Regional Planning Process. The submission period will last for no less than thirty (30) days. The submission window will end by the fifth (5th) quarter of the WestConnect planning cycle (or first (1st) quarter of the second (2nd) year of the planning cycle). The following criteria must be satisfied in order for a non-transmission alternative project submittal to be evaluated under the Regional Planning Process:

- Basic description of the project (fuel, size, location, point of contact)
- Operational benefits
- Load offset, if applicable
- Description of the issue sought to be resolved by the generating facility or non-transmission alternative, including reference to any results of prior technical studies
- Network model of the project flow study
- Short-circuit data
- Protection data
- Other technical data that might be needed for resources
- Project construction and operating costs
- Additional miscellaneous data (e.g., change files if available)

As with entities submitting a transmission project under Section III.C.5, those who submit under Section III.C.6 a non-transmission alternative under the Regional Planning Process must adhere to and provide the same or equivalent information (and deposit for study costs) as transmission alternatives, as described in Section III.C.5, above. Should the submitting Stakeholder believe certain information is not necessary, it shall identify the information it believes is not necessary and shall provide a justification for its conclusion that the information is not necessary. Although non-transmission alternative projects will be considered in the Regional Planning Process, they are not eligible for regional cost allocation.

7. The WestConnect Regional Planning Cycle

The WestConnect regional transmission planning cycle is biennial. The WestConnect PMC will develop and publish a Regional Plan every other year.

D. Transmission Developer Qualification Criteria

1. In General

A transmission developer that seeks to be eligible to use the regional cost allocation methodology for a transmission project selected in the Regional Plan for purposes of cost allocation must identify its technical and financial capabilities to develop, construct, own, and operate a proposed transmission project. To be clear, satisfaction of the criteria set forth below does not confer upon the transmission developer any right to:

(i) construct, own, and/or operate a transmission project,
(ii) collect the costs associated with the construction, ownership and/or operation of a transmission project,
(iii) provide transmission services on the transmission facilities constructed, owned and/or operated.

The applicable governing governmental authorities are the only entities empowered to confer any such rights to a transmission developer. The PMC is not a governmental authority.

2. Information Submittal

A transmission developer seeking eligibility for potential designation as the entity eligible to use the regional cost allocation for a transmission project selected in the Regional Plan for purposes of cost allocation must submit to the PMC the following information during the first quarter of the WestConnect planning cycle, except that during the first WestConnect planning cycle the PMC shall have the discretion to extend the period for the submission of this information:

a. Overview

A brief history and overview of the applicant demonstrating that the applicant has the capabilities to finance, own, construct, operate and maintain a regional transmission project consistent with Good Utility Practice within the state(s) within the WestConnect Planning Region. The applicant should identify all transmission projects it has constructed, owned, operated and/or maintained, and the states in which such projects are located.

b. Business Practices

A description of the applicant's experience in processes, procedures, and any historical performance related to engineering, constructing, operating and maintaining electric transmission facilities, and managing teams performing such activities. A discussion of the types of resources, including relevant capability and experience (in-house labor, contractors, other transmission providers, etc.) contemplated for the licensing, design, engineering, material and equipment procurement, siting and routing, Right-of-Way ("ROW") and land acquisition, construction and project management related to the construction of transmission projects. The applicant should provide information related to any current or previous experience financing, owning, constructing, operating and maintaining and scheduling access to regional transmission facilities.

c. Compliance History

The applicant should provide an explanation of any violation(s) of NERC and/or Regional Entity Reliability Standards and/or other regulatory requirements pertaining to the development, construction, ownership, operation, and/or maintenance of electric transmission facilities by the applicant or any parent, owner, affiliate, or member of the applicant that is an Alternate Qualifying Entity under Section III.D.2.l. Notwithstanding the foregoing, if at the time the applicant submits the information required by this Section III.D.2, the applicant has not developed, constructed, owned, operated or maintained electric transmission facilities, the applicant shall instead submit such information for any electric distribution or generating facilities it develops, constructs owns, operates and/or maintains, as applicable, to demonstrate its compliance history.

d. Participation in the Regional Planning Process

A discussion of the applicant's participation within the Regional Planning Process or any other planning forums for the identification, analysis, and communication of transmission projects.

e. Project Execution

A discussion of the capability and experience that would enable the applicant to comply with all on-going scheduling, operating, and maintenance activities associated with project development and execution.

f. Right-of-Way Acquisition Ability

The applicant's preexisting procedures and historical practices for siting, permitting, landowner relations, and routing transmission projects including, acquiring ROW and land, and managing ROW and land acquisition for transmission facilities. Any process or procedures that address siting or routing transmission facilities through environmentally sensitive areas and mitigation thereof. If the entity does not have such preexisting procedures, it shall provide a detailed description of its plan for acquiring ROW and land and managing ROW and land acquisition.

g. Financial Health

The applicant must demonstrate creditworthiness and adequate capital resources to finance transmission projects. The applicant shall either have an investment grade credit rating from both S&P and Moody's or provide corporate financial statements for the most recent five years for which they are available. Entities that do not have a credit rating, or entities less than five years old, shall provide corporate financial statements for each year that is available. Alternatively, the applicant may provide a guarantee, a surety bond, letter of credit or other form of security that is reasonably acceptable to the PMC.

The following ratios must be provided with any explanations regarding the ratios:

- Funds from operations-to-interest coverage.
- Funds from operation-to-total debt.
- Total debt-to-total capital.

- The applicant must indicate the levels of the above ratios the company will maintain during and following construction of the transmission element.

The PMC may request additional information or clarification as necessary.

h. Safety Program

The applicant must demonstrate that it has an adequate internal safety program, contractor safety program, safety performance record and program execution.

i. Transmission Operations

The applicant must: demonstrate that it has the ability to undertake control center operations capabilities, including reservations, scheduling, and outage coordination; demonstrate that it has the ability to obtain required path ratings; provide evidence of its NERC compliance process and compliance history, as applicable; demonstration of any existing required NERC certifications or the ability to obtain any applicable NERC certifications, establish required Total Transfer Capability; provide evidence of storm/outage response and restoration plans; provide evidence of its record of past reliability performance, as applicable; and provide a statement of which entity will be operating completed transmission facilities and will be responsible for staffing, equipment, and crew training. A potential transmission developer will not be required to have an operations entity under contract at the time it seeks to be eligible to use the regional cost allocation method for a transmission project selected in the Regional Plan for purposes of cost allocation.

j. Transmission Maintenance

The applicant must demonstrate that it has, or has plans to develop, an adequate transmission maintenance program, including staffing and crew training, transmission facility and equipment maintenance, record of past maintenance performance, NERC compliance process and any past history of NERC compliance or plans to develop a NERC compliance program, and provide a statement of which entity will be performing maintenance on completed transmission facilities. A potential transmission developer will not be required to have a maintenance entity under contract at the time it seeks to be eligible to use the regional cost allocation method for a transmission project selected in the Regional Plan for purposes of cost allocation.

k. Regulatory Compliance

The applicant must demonstrate the ability, or plans to develop the ability, to comply with Good Utility Practice, WECC criteria and regional Reliability Standards, NERC Reliability Standards, construction standards, industry standards, and environmental standards.

l. Affiliation Agreements

A transmission developer can demonstrate that it meets these criteria either on its own or by relying on an entity or entities with whom it has a corporate affiliation or other third-parties with relevant experience (Alternate Qualifying Entity(ies)). In lieu of a contractual or affiliate relationship with one or more Alternate Qualifying Entity(ies) and to the extent a transmission developer intends to rely upon third-parties for meeting those criteria, the

transmission developer must provide in attestation form, an identification of its preferred third-party contractor(s) and indicate when it plans to enter into a definitive agreement with its third-party contractor(s). If the transmission developer seeks to satisfy the criteria in whole or in part by relying on one or more Alternate Qualifying Entity(ies), the transmission developer must submit: (1) materials demonstrating to the PMC's satisfaction that the Alternate Qualifying Entity(ies) meet(s) the criteria for which the transmission developer is relying upon the alternate qualifying entity(ies) to satisfy; and (2) a commitment to provide in any project cost allocation application an executed agreement that contractually obligates the Alternate Qualifying Entity(ies) to perform the function(s) for which the transmission developer is relying upon the Alternate Qualifying Entity(ies) to satisfy.

m. WestConnect Membership

A transmission developer must be a member of either the WestConnect Transmission Owners with Load Serving Obligations or Independent Transmission Developers and Owners sector, or must agree to join the WestConnect Transmission Owners with Load Serving Obligations or Independent Transmission Developers and Owners sector and agreed to sign the Planning Participation Agreement if the transmission developer seeks to be an entity eligible to use the regional cost allocation method for a transmission project selected in the Regional Plan for purposes of cost allocation.

n. Other

Any other relevant project development experience that the transmission developer believes may demonstrate its expertise in the above areas.

3. Identification of Transmission Developers Satisfying the Criteria

a. Notification to Transmission Developer

No later than September 30 each year, the PMC is to notify each transmission developer whether it has satisfied the stated criteria. A transmission developer failing to satisfy one or more of the qualification criteria is to be informed of the failure(s) and accorded an additional opportunity to cure any deficiency(ies) within thirty (30) calendar days of notice from the PMC by providing any additional information.

The PMC is to inform the transmission developer whether the additional information satisfies the qualification criteria within forty-five (45) calendar days of receipt of the additional information.

The PMC is to identify the transmission developers that have satisfied the qualification criteria (the "Eligible Transmission Developers") by posting on the WestConnect website, on or before December 31 of each year.

b. Annual Recertification Process and Reporting Requirements

By June 30 of each year, each Eligible Transmission Developer must submit to WestConnect a notarized letter signed by an authorized officer of the Eligible Transmission Developer certifying that the Eligible Transmission Developer continues to meet the current qualification criteria.

The Eligible Transmission Developer shall submit to the PMC an annual certification fee equal to the amount of the WestConnect annual membership fee. If the Eligible Transmission Developer is a member of WestConnect and is current in payment of its annual membership fee, then no certification fee will be required.

If at any time there is a change to the information provided in its application, an Eligible Transmission Developer shall be required to inform the PMC chair within thirty (30) calendar days of such change so that the PMC may determine whether the Eligible Transmission Developer continues to satisfy the qualification criteria. Upon notification of any such change, the PMC shall have the option to: (1) determine that the change does not affect the status of the transmission developer as an Eligible Transmission Developer; (2) suspend the transmission developer's eligibility status until any deficiency in the transmission developer's qualifications is cured; (3) allow the transmission developer to maintain its eligibility status for a limited time period, as specified by the PMC, while the transmission developer cures the deficiency; or (4) terminate the transmission developer's eligibility status.

c. Termination of Eligibility Status

The PMC may terminate an Eligible Transmission Developer's status if the Eligible Transmission Developer: (1) fails to submit its annual certification letter; (2) fails to pay the applicable WestConnect membership fees; (3) experiences a change in its qualifications and the PMC determines that it may no longer qualify as an Eligible Transmission Developer; (4) informs the PMC that it no longer desires to be an Eligible Transmission Developer; (5) fails to notify the PMC of a change to the information provided in its application within thirty (30) days of such change; or (6) fails to execute the Planning Participation Agreement as agreed to in the qualification criteria within a reasonable time defined by the PMC, after seeking to be an entity eligible to use the regional cost allocation method for a transmission project selected in the Regional Plan for purposes of cost allocation.

E. Overview of Regional Planning Methodology and Evaluation Process

The Regional Planning Process is intended to identify regional needs and more efficient or cost-effective solutions to satisfy those needs. Consistent with Order No. 890, qualified projects timely submitted through the Regional Planning Process will be evaluated and selected from competing solutions and resources such that all types of resources, as described below, are considered on a comparable basis. The same criteria and evaluation process will be applied to competing solutions and/or projects, regardless of type or class of Stakeholder proposing them. Where a regional transmission need is identified, the PMC is to perform studies that seek to meet that need through regional projects, even in the absence of project proposals advanced by Stakeholders or projects identified through the WECC process. When the PMC performs a study to meet an identified regional need in circumstances where no Stakeholder has submitted a project proposal to meet that regional need, the PMC is to pursue such studies in a not unduly discriminatory fashion. The study methods employed for PMC-initiated studies will be the same types of study methods employed for Stakeholder-initiated studies (see, e.g., Section III.F addressing the use of NERC Transmission Planning (TPL) Reliability Standards for regional reliability projects, Section III.G addressing the use of production cost modeling for regional economic projects, and Section III.H addressing the identification of Public Policy Requirements for regional public policy-driven projects).

The solution alternatives will be evaluated against one another on the basis of the following criteria to select the preferred solution or combination of solutions: (1) ability to fulfill the identified need practically; (2) ability to meet applicable reliability criteria or NERC Transmission Planning Standards issues; (3) technical, operational and financial feasibility; (4) operational benefits/constraints or issues; (5) cost-effectiveness over the time frame of the study or the life of the facilities, as appropriate (including adjustments, as necessary, for operational benefits/constraints or issues, including dependability); (6) where applicable, consistency with Public Policy Requirements or regulatory requirements, including cost recovery through regulated rates; and (7) a project must be determined by the PMC to be a more efficient or cost-effective solution to one or more regional transmission needs to be eligible for regional cost allocation, as more particularly described below.

The Regional Planning Process provides for an assessment of regional solutions falling in one or more of the following categories:

- Regional reliability solutions
- Regional economic solutions
- Regional transmission needs driven by Public Policy Requirements
- Non-transmission alternatives

PSCo encourages all interested Stakeholders to consult the Business Practice Manual for additional details regarding the planning process, timing, and implementation mechanics.

All WestConnect Transmission Owners with Load Serving Obligation shall be responsible for submitting their local transmission plans for inclusion in the Regional Plan in accordance with the timeline stated in the Business Practice Manual. Those individual plans will be included in the Regional Plan base case system models.

F. WestConnect Reliability Planning Process

Once the base case is established and verified, the PMC is to perform a regional reliability assessment in which the base case system models will then be checked for adherence to the relevant NERC or WECC Transmission Planning Reliability Standards, through appropriate studies, including, but not limited to, steady-state power flow, voltage, stability, short circuit, and transient studies as outlined in the Business Practice Manual. If a reliability violation is identified in this power flow process, the violation will be referred back the appropriate Transmission Owner.

The PMC will identify projects to resolve any regional violations that impact more than one Transmission Owner of relevant NERC or WECC Transmission Planning Reliability Standards or WECC criteria. In addition, an opportunity will be afforded to any interested party to propose regional reliability projects that are more efficient or cost-effective than other proposed solutions. The PMC will then identify the more efficient or cost-effective regional transmission project that meets the identified regional transmission need, taking into account factors such as how long the project would take to complete and the timing of the need. Because local Transmission Owners are ultimately responsible for compliance with NERC Reliability Standards and for meeting local needs the local transmission plans will not be modified, however, the PMC may identify more efficient or cost-effective regional transmission projects. As seen in Exhibit 1 of this Attachment R-PSCo, the PMC will perform the regional reliability assessment and, if necessary, identify a regional need for transmission projects to resolve any violations that impact more than one transmission owner in the fourth quarter of the planning cycle.

G. WestConnect Economic Planning Process

As part of the Regional Planning Process, the PMC is to analyze whether there are projects that have the potential to reduce the total delivered cost of energy by alleviating congestion or providing other economic benefits to the WestConnect Planning Region through production cost modeling. This analysis also utilize WECC Board-approved recommendations to further investigate congestion within the WestConnect Planning Region for congestion relief or economic benefits that has subsequently been validated by WestConnect. Additional projects may also be proposed by WestConnect Stakeholders or developed through the Stakeholder process for evaluation of economic benefits. Under the Regional Planning Process, the PMC will identify more efficient or cost-effective regional transmission projects, but will not modify local transmission plans.

The WestConnect economic planning process will analyze benefits via detailed production cost simulations. The models employed in the production cost simulations will appropriately consider the impact of transmission projects on production cost and system congestion. The WestConnect economic planning process will also consider the value of decreased reserve sharing requirements in its development of a plan that is more efficient or cost-effective. As seen in Exhibit 1 of this Attachment R-PSCo, the PMC will develop the production cost modeling analysis in the second (2nd) and third (3rd) quarters of the planning cycle and identify economic transmission projects in the sixth (6th) quarter and parts of the fifth (5th) and seventh (7th) quarters of the planning cycle.

H. WestConnect Public Policy Planning Process

1. Procedures for Identifying Transmission Needs Driven by Public Policy Requirements

It is anticipated that any regional transmission need that is driven by Public Policy Requirements will be addressed initially within the local planning cycles of the individual Transmission Owners in the WestConnect Planning Region through the consideration of local transmission needs driven by a Public Policy Requirement, since a Public Policy Requirement is a requirement that is imposed upon individual Transmission Owners (as opposed to a requirement that is imposed on a geographic region). For those Public Policy Requirements that affect more than one Transmission Owner in the WestConnect Planning Region, a solution identified at the local level to satisfy the local needs of the affected Transmission Owner(s), may also satisfy a regional transmission need identified by the PMC for the WestConnect Planning Region.

WestConnect Transmission Owner members that are planning consistent with Order No. 890 will continue to conduct local transmission planning processes (Section II.E of this Attachment R-PSCo), which provide a forum for discussions on local transmission needs driven by Public Policy Requirements. These local processes provide the basis for the individual Transmission Owners' local transmission plans, which are then incorporated into the regional base case at the start of the Regional Planning Process under Order No. 1000.

The PMC is to provide notice on the WestConnect website of both regional transmission planning meetings convened by the PMC for the WestConnect region, and local transmission planning meetings of the individual Transmission Owners in the WestConnect region.

The PMC will begin the evaluation of regional transmission needs driven by Public Policy Requirements by identifying any Public Policy Requirements that are driving local transmission needs of the Transmission Owners in the WestConnect Planning Region, and including them in the transmission system models (the regional base case) underlying the development of the Regional Plan. Then, the PMC will seek the input of Stakeholders in the WestConnect region on those Public Policy Requirements in an effort to engage Stakeholders in the process of identifying regional transmission needs driven by Public Policy Requirements. The PMC will communicate with Stakeholders through public postings on the WestConnect website of meeting announcements and discussion forums. In addition, the PMC is to establish an email distribution list for those Stakeholders who indicate a desire to receive information via electronic list serves.

After allowing for Stakeholder input on regional transmission needs driven by Public Policy Requirements and regional solutions to those needs, as part of the Regional Planning Process, the PMC is to identify in the Regional Plan those regional transmission needs driven by Public Policy Requirements that were selected by the PMC for evaluation of regional solutions.

In selecting those regional transmission needs driven by Public Policy Requirements that will be evaluated for regional solutions in the current planning cycle, the PMC is to consider, on a non-discriminatory basis, factors, including but not limited to, the following:

(i) whether the Public Policy Requirement is driving a regional transmission need that can be reasonably identified in the current planning cycle;
(ii) the feasibility of addressing the regional transmission need driven by the Public Policy Requirement in the current planning cycle;
(iii) the factual basis supporting the regional transmission need driven by the Public Policy Requirement; and
(iv) whether a Public Policy Requirement has been identified for which a regional transmission need has not yet materialized, or for which there may exist a regional transmission need but the development of a solution to that need is premature.

No single factor shall necessarily be determinative in selecting among the potential regional transmission needs driven by Public Policy Requirements.

The process by which the PMC is to identify those regional transmission needs for which a regional transmission solution(s) will be evaluated, out of what may be a larger set of regional transmission needs, is to utilize the communication channels it has in place with Stakeholders, identified above (open meetings and discussion forums convened by the PMC), through which regional transmission needs driven by Public Policy Requirements are to be part of the open dialogue.

2. <u>Procedures for Identifying Solutions to Regional Transmission Needs Driven by Public Policy Requirements</u>

Stakeholders are to have opportunities to participate in discussions during the Regional Planning Process with respect to the development of solutions to regional transmission needs driven by Public Policy Requirements. Such participation may take the form of attending planning meetings, offering comments for consideration by the PMC on solutions to regional needs driven by Public Policy Requirements, and offering comments on

proposals made by other stakeholders or by the PMC. Stakeholders that are members of the WestConnect PMC are performing the function of regional transmission planning and developing regional solutions to identified regional transmission needs driven by Public Policy Requirements through membership on subcommittees of the PMC.

After allowing for stakeholder input on solutions to regional transmission needs driven by Public Policy Requirements, as part of the Regional Planning Process, the PMC is to identify in the Regional Plan those regional transmission solutions driven by Public Policy Requirements that were selected by the PMC and any regional transmission project(s) that more efficiently or cost-effectively meet those needs.

The procedures for identifying and evaluating potential solutions to the identified transmission needs driven by Public Policy Requirements are the same as those procedures used to evaluate any other project proposed in the Regional Planning Process, whether or not submitted for purposes of cost allocation.

The PMC will perform a Public Policy Requirements analysis to help identify if a transmission solution is necessary to meet an enacted public policy. For a transmission need driven by Public Policy Requirements, the PMC will identify if a more efficient or cost-effective regional transmission solution exists based upon several different considerations, including consideration of whether the project is necessary and capable of meeting transmission needs driven by Public Policy Requirements, while also

(i) Efficiently resolving any criteria violations identified by studies pursuant to any relevant NERC Transmission Planning (TPL) Reliability Standards for regional reliability projects or WECC Transmission Planning Reliability Standards or WECC criteria, as applicable, that could impact more than one Transmission Owner as a result of a Public Policy Requirement or,

(ii) Producing economic benefits shown through detailed production cost simulations. The models employed in the production cost simulations will appropriately consider the impact of transmission projects on production cost, system congestion and the value of decreased reserve sharing requirements.

The PMC will develop the public policy analysis in the sixth (6th) quarter and parts of the fifth (5th) and seventh (7th) quarters of the planning cycle.

3. <u>Proposed Public Policy</u>

A public policy that is proposed, but not required (because it is not yet enacted or promulgated by the applicable governmental authority) may be considered through Section III.G (WestConnect Economic Planning Process) of this Attachment R-PSCo, if time and resources permit.

4. <u>Posting of Public Policy Needs</u>

WestConnect will maintain on its website (i) a list of all transmission needs identified that are driven by Public Policy Requirements and that are included in the studies for the

current regional transmission planning cycle; and (ii) an explanation of why other suggested transmission needs driven by Public Policy Requirements will not be evaluated.

I. Consideration of Non-Transmission Alternatives

Non-transmission alternatives submitted in accordance with Section III.C.6 above will be evaluated to determine if they will provide a more efficient or cost-effective solution to an identified regional transmission need. Non-transmission alternatives include, without limitation, technologies that defer or possibly eliminate the need for new and/or upgraded transmission lines, such as distributed generation resources, demand side management (load management, such as energy efficiency and demand response programs), energy storage facilities and smart grid equipment that can help eliminate or mitigate a grid reliability problem, reduce uneconomic grid congestion, and/or help to meet grid needs driven by Public Policy Requirements. Non-transmission alternatives are not eligible for regional cost allocation.

J. Approval of the WestConnect Regional Plan

The Cost Allocation Subcommittee is to submit, for review and comment, the results of its project benefit/cost analysis and beneficiary determination to the PMC Chair and to the identified beneficiaries of the transmission projects proposed for cost allocation. The PMC shall make available to its Members sufficient information to allow for a reasonable opportunity to comment on the proposed selection. The PMC shall not make a determination on the project benefit/cost analysis and beneficiary determination until it has reviewed all comments. Upon approval of the PMC, the project benefit/cost analysis and beneficiary identifications shall be posted by the PMC on the WestConnect website.

1. <u>CTO Acceptance of Cost Allocation</u>

Each CTO beneficiary will indicate whether it accepts the cost allocation for the project as follows:

(i) A CTO Member, in its sole discretion, may elect to accept a cost allocation for each separate transmission facility for which it is identified as a beneficiary, but only if it notifies the Chair of the PMC in writing of its decision to accept any such cost allocation within sixty (60) calendar days after the benefit/cost analysis is posted by the PMC under this Section III.J; provided, however, that the PMC has the discretion to extend the 60-day period when additional time is necessary for an identified beneficiary to complete its internal review and deliberation process before deciding to accept the cost allocation.

(ii) A CTO Member giving notice that it elects to accept a cost allocation for a transmission facility may rescind that notice at any time prior to the end of the sixty (60) day period, or such extended period established in this Section III.J.1.i.

(iii) A CTO Member that does not accept a cost allocation for a transmission facility will not be subject to cost allocation for that transmission facility.

The information made available under this Section III.J will be electronically masked and made available pursuant to a process that the PMC reasonably determines is necessary to prevent the disclosure of confidential information or CEII contained in the information.

2. Recalculation of Benefits and Costs for Reliability Projects

The Cost Allocation Subcommittee will adjust, as necessary, its project benefit/cost analysis and beneficiary identification for any transmission project that continues to meet the region's criteria for regional cost allocation. For any CTO beneficiary that does not accept cost allocation for a project under this Section III.J, such CTO's transmission need(s) which was included within the identification of the region's transmission needs under Sections III.F through III.H (for which the regional project would have avoided an alternative reliability project in such CTO's local transmission plan) will be removed as a regional transmission need for purposes of justifying a project's approval as a project eligible for inclusion in the Regional Plan for purposes of cost allocation.

3. Recalculation of Benefits and Costs for Public Policy Requirements Projects

The Cost Allocation Subcommittee will adjust, as necessary, its project benefit/cost analysis and beneficiary identification for any transmission project that continues to meet the region's criteria for regional cost allocation. For any CTO beneficiary that does not accept cost allocation for a project under this Section III.J, such CTO's transmission need(s) which was included within the identification of the region's transmission needs under Sections III.F through III.H (for which the regional project would have avoided an alternative Public Policy Requirements project in such CTO's local transmission plan) will be removed as a regional transmission need for purposes of justifying a project's approval as a project eligible for inclusion in the Regional Plan for purposes of cost allocation. This shall include any such CTO's resource needs necessary to comply with Public Policy Requirements.

4. Recalculation of Benefits and Costs for Economic Projects

The Cost Allocation Subcommittee will adjust, as necessary, its project benefit/cost analysis and beneficiary identification for any transmission project that continues to meet the region's criteria for regional cost allocation. For any CTO beneficiary that does not accept cost allocation for a project under this Section III.J, such CTO's transmission benefits which were included within the identification of the regional project's economic benefits under Sections III.F through III.H will be removed as a regional transmission benefit for purposes of justifying a project's approval as a project eligible for inclusion in the Regional Plan for purposes of cost allocation. This shall include the value of any economic benefits determined through the regional transmission plan to accrue to such CTO.

5. Resultant Increase in Beneficiary Cost Allocation

Any regional transmission project that continues to meet the region's benefit/cost and other criteria for regional cost allocation will remain eligible for selection in the Regional Plan for purposes of cost allocation.

6. Approval of the WestConnect Regional Transmission Plan

Upon completion of the process outlined above, the PMC will vote on whether to accept the proposed plan. The Regional Plan will document why projects were either included or not included in the Regional Plan. In addition, the Regional Plan is to describe the manner in which the applicable regional cost allocation methodology was applied to each project selected in the Regional Plan for purposes of regional cost allocation. Projects that meet system needs are incorporated into the Regional Plan. Participant funded projects and other types of projects may be included in the Regional Plan; however, those projects are not eligible for regional cost allocation.

K. Reevaluation of the WestConnect Regional Plan

The PMC is the governing body responsible for deciding whether to reevaluate the Regional Plan to determine if the conditions, facts and/or circumstances relied upon in initially selecting a transmission project for inclusion in the Regional Plan for purposes of cost allocation have changed and, as a result, require reevaluation. Reevaluation will begin within the second planning cycle following the Effective Date. The Regional Plan and any project selected for cost allocation in the Regional Plan, including any local or single-system transmission projects or planned transmission system upgrades to existing facilities selected for purposes of cost allocation, shall be subject to reevaluation in each subsequent planning cycle according to the criteria below. Upon reevaluation, the Regional Plan and any projects selected for purposes of cost allocation in connection therewith may be subject to modification, including the status as a project selected for cost allocation, with any costs reallocated under Section VI as if it were a new project. Only the PMC has the authority to modify the status of a transmission project selected for cost allocation. Conditions that trigger reevaluation are:

- The underlying project characteristics and/or regional or interregional needs change in the Regional Plan. Examples include, but are not limited to: (a) a project's failure to secure a developer, or a developer's failure to maintain the qualifications necessary to utilize regional cost allocation, or (b) a change (increase or decrease) in the identified beneficiaries of a project (which changes may occur through company acquisitions, dissolutions, or otherwise), (c) a change in the status of a large load that contributes to the need for a project, or (d) projects affected by a change in law or regulation;
- Projects that are delayed and fail to meet their submitted in-service date by more than two (2) years. This includes projects delayed by funding, regulatory approval, contractual administration, legal proceedings (including arbitration), construction delays, or other delays;
- Projects with significant project changes, including, but not limited to kilovolt (kV), megavolt ampere (MVA), or path rating, number of circuits, number of transmission elements, or interconnection locations; and
- Projects with a change in the calculation of benefits or benefit/cost (B/C) ratio that may affect whether the project selected for inclusion in the Regional Plan for purposes of cost allocation is a more efficient or cost-effective regional solution.

- Example 1: Where an increase in the selected project's costs, including but not limited to, material, labor, environmental mitigation, land acquisition, operations and maintenance, and mitigation for identified transmission system and region, causes the total project costs to increase above the level upon which the project was initially selected for inclusion in the Regional Plan for purposes of cost allocation, the inclusion of the regional project in the Regional Plan will be reevaluated to determine if the regional project continues to satisfy the region's B/C ratio and can be found to be a more efficient or cost-effective solution under current cost information.
- Example 2: A selected project's benefits may include identification of a reliability benefit in the form of remedying a violation of a Reliability Standard. If the identified beneficiary implements improvements, such as a Remedial Action Scheme, to achieve reliability in compliance with the Reliability Standard at issue, inclusion of the regional project in the regional plan will be reevaluated to determine if the regional project continues to satisfy the region's B/C ratio and can be found to be a more efficient or cost-effective solution under current benefit information.
- Example 3: Where a project's estimated benefits include benefits in the form of avoided costs (e.g., a regional project's ability to avoid a local project), and the project is not avoided, the inclusion of the regional project in the Regional Plan will be reevaluated to determine if the regional project continues to satisfy the region's B/C ratio and can be found to be a more efficient or cost-effective solution under current facts and circumstances.

Projects selected for purposes of cost allocation will continue to be reevaluated until all the following conditions have been met:

- State and federal approval processes completed and approved (including cost recovery approval under Section 205 of the Federal Power Act as applicable);
- All local, state, and federal siting permits have been approved; and
- Major construction contracts have been issued.

When the Regional Plan is reevaluated as a result of any of the conditions triggering reevaluation addressed above, the PMC is to determine if an evaluation of alternative transmission solutions is needed in order to meet an identified regional need. In doing so, the PMC is to use the same processes and procedures it used in the identification of the original transmission solution to the regional need. If an alternative transmission solution is needed, the incumbent Transmission Owner may propose one or more solutions that it would implement within its retail distribution service territory or footprint, and if such proposed solution is a transmission facility, the Transmission Owner may submit the project for possible selection in the Regional Plan for purposes of cost allocation.

Projects not subject to reevaluation include, but are not limited to, the following:

- Local or single system transmission projects that have been identified in individual Transmission Owner's Transmission Planning (TPL) Reliability Standards compliance assessments to mitigate reliability issues and that have not been proposed for (and selected by the PMC for) regional cost allocation; and
- Planned transmission system upgrades to existing facilities that have not been proposed for (and selected by the PMC for) regional cost allocation.

Projects meeting any of the following criteria as of the Effective Date will also not be subject to reevaluation under the Regional Planning Process:

- Projects of Transmission Owners who have signed the Planning Participation Agreement and that have received approval through local or state regulatory authorities or board approval;
- Local or single system transmission projects that have been planned and submitted for inclusion in the Regional Plan or exist in the 10-year corporate capital project budgets; and
- Projects that are undergoing review through the WECC Project Coordination and Rating Review Process as of the Effective Date.

L. Confidential or Proprietary Information

Although the Regional Planning Process is open to all Stakeholders, Stakeholders will be required to comply at all times with certain applicable confidentiality measures necessary to protect confidential information, proprietary information or CEII. From time to time the regional transmission planning studies and/or open Stakeholder meetings may include access to base case data that are WECC proprietary data, information classified as CEII by FERC, or other similar confidential or proprietary information. In such cases, access to such confidential or proprietary information shall be limited to only those Stakeholders that (i) hold membership in or execute a non-disclosure agreement ("NDA") with WECC (See PSCo Attachment R Hyperlinks List posted on the PSCo OASIS [www.oatioasis.com/PSCo/]); (ii) execute a non-disclosure agreement with the applicable WestConnect Planning Region members; or (iii) are parties to the Planning Participation Agreement, as may be applicable.

Any entity wishing to access confidential information, subject to applicable standards of conduct requirements, discussed in the Regional Planning Process must execute an NDA, and submit it to NDA@westconnect.com. A link to the NDA has been provided (see PSCo Attachment R Hyperlinks List posted on the PSCo OASIS [www.oatioasis.com/PSCo/])

IV. Coordination at the Western Interconnection Level

A. PSCo–WestConnect Coordination

PSCo shall coordinate its plan on a regional basis through WestConnect. WestConnect will coordinate its Regional Plan with TEPPC.

B. Procedures for Interregional Planning Project Review

1. <u>WECC Coordination of Reliability Planning</u>

   a. WECC develops the Western Interconnection-wide databases for transmission planning analysis such as power flow, stability and dynamic voltage stability studies. The WECC-approved base cases are used for study purposes by transmission planners, regional transmission planning groups, and other entities that have signed non-disclosure agreements with WECC.

   b. WECC maintains a database for reporting the status of all planned projects throughout the Western Interconnection.

c. WECC provides for coordination of planned projects through its Procedures for Regional Planning project review.

d. WECC's path rating process ensures that a new project will have no adverse effect on existing projects.

2. WECC-TEPPC Open Stakeholder Meetings

Western Interconnection-wide economic planning studies are conducted by the WECC-TEPPC in an open Stakeholder process that holds region-wide Stakeholder meetings on a regular basis. The WECC TEPPC Transmission Planning Protocol, including the TEPPC procedures for prioritizing and completing regional economic studies, is posted on the WECC website. (See PSCo Attachment R Hyperlinks List posted on the PSCo OASIS [www.oatioasis.com/PSCo/]). PSCo participates in the region-wide planning processes, as appropriate, to ensure data and assumptions are coordinated.

3. Role of WECC TEPPC

WECC TEPPC provides two main functions in relation to the WestConnect Regional Planning Process:

a. Development and Maintenance of the West-Wide Economic Planning Study Database.

(i) TEPPC uses publicly available data to compile a database that can be used by a number of economic congestion study tools.

(ii) TEPPC's database is available for use in running economic congestion studies. For an interested Stakeholder to utilize WECC's PROMOD planning model, it must comply with WECC confidentiality requirements.

b. Performance of Economic Planning Studies

TEPPC has an biennial study cycle described in the WECC-TEPPC Transmission Planning Protocol, (See PSCo Attachment R Hyperlinks List posted on the PSCo OASIS [www.oatioasis.com/PSCo/]), during which it will update databases, develop and approve a study plan that includes studying transmission customer high priority economic planning study requests as determined by the open TEPPC Stakeholder process, perform the approved studies and document the results in a report.

c. Identification of Congested Paths for WestConnect Economic Review

Through TEPPC's economic study process, congested paths may be reviewed and identified as being candidates for economic transmission studies. Upon WECC Board approval of a designation for such a path and WestConnect validation, the Regional Planning Process will review the path for potential economic transmission solutions.

V. Dispute Resolution

In the event of a dispute concerning either a procedural or substantive matter within the jurisdiction of FERC, the following dispute resolution processes will apply:

A. WECC

If the dispute is one that is within the scope of the WECC dispute resolution procedures, then such procedures contained in the WECC Business and Governance Guidelines and Policies will apply. (See PSCo Attachment R Hyperlinks List posted on the PSCo OASIS [www.oatioasis.com/PSCo/])

B. Non-WECC Disputes

For disputes not within the scope of the WECC dispute resolution procedures, and for disputes not between or among the members of the PMC (which disputes will be subject to the dispute resolution provisions set forth in Section V.D), the dispute resolution procedures set forth in Section 12 of the Joint OATT will apply, with the added provision that upon agreement of the parties, any dispute that is not resolved by direct negotiation between or among the affected parties within a reasonable period of time, may be referred to mediation (before or during arbitration), and all applicable timelines will be suspended until such time as the mediation process terminates (unless otherwise agreed by the parties). Notwithstanding that the dispute resolution procedures under Section 12 of the Joint OATT apply only to Xcel Energy Operating Companies and their respective Transmission Customers, Section 12 of the Joint OATT will be deemed to be applicable to Stakeholders for purposes of this Attachment R-PSCo, except as otherwise provided herein.

All mediations and/or arbitrations arising from disputes under the Regional Planning Process in this Attachment R-PSCo shall be held in Denver, Colorado, unless otherwise agreed to by the Parties.

C. Resolution by FERC

Notwithstanding anything to the contrary in this Section V, any affected party may refer either a procedural or substantive matter within the jurisdiction of FERC to FERC for resolution, for example, by filing with FERC a complaint, a request for declaratory order, or a change in rate.

D. Disputes Between PMC Members

For disputes between members of the PMC, the following dispute resolution procedures are to apply:

1. <u>Initiating Dispute Resolution</u>

The disputing PMC member(s) initiates its dispute by providing written notification to the PMC (or a designated sub-committee of the PMC) in accordance with the provisions of the Planning Participation Agreement, in which event the PMC will seek to resolve the dispute through discussion, negotiation and the development of a recommended course of action. The PMC may act to adopt a resolution recommended by its own committee members or sub-committees, or alternatively the disputing parties may act to refer the dispute to arbitration for resolution.

2. <u>Arbitration</u>

A dispute may be referred to arbitration under the governing provisions of the Planning Participation Agreement.

3. Resolution by FERC

The availability of the dispute resolution avenues identified above does not eliminate a disputing PMC member's(s') right under the Federal Power Act to refer either a procedural or substantive matter within the jurisdiction of FERC to FERC for resolution, for example by filing with FERC a complaint, a request for declaratory order or a change in rate.

VI. Cost Allocation

A. Local Transmission Projects

Local Transmission Projects are projects located within a Transmission Owner's retail distribution service territory or footprint unless such projects are submitted and selected in the Regional Plan for purposes of cost allocation.[6] A Transmission Owner is not precluded from proposing Local Transmission Projects for inclusion in the Regional Plan for purposes of cost allocation in the Regional Planning Process. A Local Transmission Project that is not submitted or not selected for inclusion in the Regional Plan is not eligible for cost allocation in the Regional Plan, and not subject to the provisions governing regional cost allocation set forth below.

Note 6: The reference to a Transmission Owner's "footprint" refers to the electrical footprint of the Transmission Owner (i.e. the location of that Transmission Owner's electrical assets) and not necessarily the physical/spatial footprint. Where a Transmission Owner within the WestConnect Planning Region is a transmission-only company with no retail distribution service territory, the term "footprint" would refer to the location of the transmission facilities of such transmission-only company.

For any transmission project where PSCo is the sole owner or such project is to be built within or for the benefit of the existing PSCo system such as local, small and/or reliability transmission projects, PSCo shall proceed with the project pursuant to its rights and obligations as a Transmission Provider for the local area. Any projects necessary to ensure reliability or that provide economic benefits to the PSCo system and which fall outside the requirements for inclusion in the Regional Plan for purposes of cost allocation are eligible to be considered Local Transmission Projects.

PSCo may share ownership, and associated costs, of any new transmission project, based upon mutual agreement between the parties. Such a joint ownership arrangement may arise because of existing joint ownership of facilities in the area of the new facilities, overlapping service territories, or other relevant considerations.

1. Open Season Solicitation of Interest

For any transmission project identified in a PSCo reliability or economic planning study in which PSCo is the project sponsor, PSCo may elect to provide an "open season" solicitation of interest to secure additional project participants. Upon a determination by PSCo to hold an open season solicitation of interest for a transmission project, PSCo will:

a. Announce and solicit interest in the project through informational meetings, the PSCo OASIS website, and/or other means of dissemination as appropriate.

b. Hold meetings with interested parties, state public utility commission staffs from potentially affected states, and other affected Stakeholders.

c. Post information via the PSCo OASIS website.

d. Develop the initial transmission project specifications, the initial cost estimates and potential transmission line routes; guide negotiations and assist interested parties to determine cost responsibility for initial studies; guide the project through the applicable line siting processes; develop final project specifications and costs; obtain commitments from participants for final project cost shares; and secure execution of construction and operating agreements.

e. Whether as a project sponsor or a participant, coordinate as necessary with any other participant or sponsor, as the case may be, to integrate into PSCo's Ten Year Transmission Plan any other planned project on or interconnected with PSCo's transmission system.

B. Regional Transmission Projects

For any project determined by the PMC to be eligible for regional cost allocation, project costs will be allocated proportionally to those entities determined by the PMC, as shown in the Regional Plan, to be beneficiaries in the WestConnect Planning Region, as identified in this Attachment R-PSCo, subject to the processes set forth in Sections III through VI.

The PMC, with input from the CAS, is to determine whether a project is eligible for regional cost allocation, and assesses the project's costs against its benefits in accordance with the following factors:

- Benefits and beneficiaries will be identified before cost allocation methods are applied.
- Cost assignments shall be commensurate with estimated benefits.
- Those that receive no benefits must not be involuntarily assigned costs.
- A benefit-to-cost threshold of not more than 1.25 shall be used, as applicable, so that projects with significant benefits are not excluded.
- Costs must be allocated solely within the WestConnect Planning Region, unless other regions or entities voluntarily assume costs.
- Costs for upgrades on neighboring transmission systems or other planning regions that are (i) required to be mitigated by the WECC Path Rating process, FERC tariff requirements, or NERC Reliability Standards, or (ii) negotiated among interconnected parties will be included in the total project costs and used in the calculation of B/C ratios.
- Cost allocation method and data shall be transparent and with adequate documentation.
- Different cost allocation methods may be used for different types of projects.

Specifically, the PMC will consider the following projects eligible for cost allocation consideration as further described below based on specified criteria:

- Reliability projects;
- Economic or congestion relief projects; or
- Public policy projects.

Only projects that fall within one or more of these three categories and satisfy the cost-to-benefit analyses and other requirements, as specified herein, are eligible for cost allocation in the WestConnect Planning Region. PSCo encourages all interested Stakeholders to consult the Business Practice Manual for additional details regarding the assessment for eligibility for regional cost allocation assessment. Summary provisions are provided below:[7]

Note 7: References to "Transmission Owners" in the cost allocation provisions are to transmission owners for whom the WestConnect Planning Management Committee is performing the function of regional transmission planning. At present, those Transmission Owners are TOLSO members.

1. Allocation of Costs for Reliability Projects

In order to allocate costs to Transmission Owners for system reliability improvements that are necessary for their systems to meet the NERC TPL standards, the WestConnect cost allocation procedure shall allocate costs for system reliability improvements only when a system improvement is required to comply with the NERC TPL Reliability Standards during the planning horizon.

All components of a Transmission Owner's local transmission plan shall be included in the Regional Plan and shall be considered Local Transmission Projects that are not eligible for regional cost allocation. A system performance analysis shall be performed on the collective plans to ensure the combined plans adhere to all relevant NERC TPL Reliability Standards and Stakeholders shall be afforded an opportunity to propose projects that are more efficient or cost-effective than components of multiple Transmission Owner local plans as outlined in Section III.F, above.

Should a reliability issue be identified in the review of the included local transmission plan, the project necessary to address that reliability issue shall be included in the Regional Plan and the cost shall be shared by the utilities whose load contributed to the need for the project.

Should multiple utilities have separate reliability issues that are addressed more efficiently or cost-effectively by a single regional project, that regional project shall be approved for selection in the Regional Plan and the cost shall be shared by those Transmission Owners in proportion to the cost of alternatives that could be pursued by the individual Transmission Owners to resolve the reliability issue. The ultimate responsibility for maintaining system reliability and compliance with NERC Transmission Planning Standards rests with each Transmission Owner.

The costs for regional reliability projects shall be allocated according to the following equation:

(1 divided by 2) times 3 equals 4

Where:

1 is the cost of local reliability upgrades necessary to avoid construction of the regional reliability project in the relevant Transmission Owner's retail distribution service territory or footprint

2 is the total cost of local reliability upgrades in the combination of Transmission Owners' retail distribution service territories or footprints necessary to avoid construction of the regional reliability project
3 is the total cost of the regional reliability project
4 is the total cost allocated to the relevant Transmission Owner's retail distribution service territory or footprint

The manner in which the PMC applied this methodology to allocate the costs of each regional reliability project shall be described in the Regional Plan.

2. Allocation of Costs for Economic Projects

Cost allocation for economic projects associated with congestion relief that provide for more economic operation of the system will be based on the calculation of economic benefits that each Transmission Owner system will receive. Cost allocation for economic projects shall include scenario analyses to ensure that benefits will actually be received by beneficiaries with relative certainty. Projects for which benefits and beneficiaries are highly uncertain and vary beyond reasonable parameters based on assumptions about future conditions will not be selected for cost allocation.

In order for a project to be considered economically-justified and receive cost allocation associated with economic projects, the project must have a B/C ratio that is greater than 1.0 under each reasonable scenario evaluated and have an average ratio of at least 1.25 under all reasonable scenarios evaluated. Costs will be allocated on the basis of the average of all scenarios evaluated. The B/C ratio shall be calculated by the PMC. This B/C ratio shall be determined by calculating the aggregate load-weighted benefit-to-cost ratio for each transmission system in the WestConnect Planning Region. The benefits methodology laid out below ensures that the entities that benefit the most from the completion of an economic project are allocated costs commensurate with those project benefits.

The cost of any project that has an aggregate 1.25 B/C ratio or greater will be divided among the Transmission Owners that show a benefit based on the amount of benefits calculated to each respective Transmission Owner. For example, if a $100 million dollar project is shown to have $150 million in economic benefit, the entities for which the economic benefit is incurred will be determined. The cost of the project will then be allocated to those entities, based on the extent of each entity's economic benefits relative to the total project benefits. This will ensure that each entity that is allocated cost has a B/C ratio equal to the total project B/C ratio. For example:

- Project with $150 million in economic benefit and $100 million in cost
  - Company 1 has $90 million in benefits; Company 2 has $60 million in benefits
  - Company 1 allocation: 90/150 (100) = $60 million
  - Company 1 B/C ratio: 90/60 = 1.5
  - Company 2 allocation: 60/150 (100) = $40 million
  - Company 2 B/C ratio: 60/40 = 1.5

Other than through the reevaluation process described in Section III.J of this Attachment R-PSCo, the benefits and costs used in the evaluation shall only be calculated during the planning period and shall be compared on a net present value basis.

The WestConnect economic planning process shall consider production cost savings and reduction in reserve sharing requirements as economic benefits capable of contributing to the determination that a project is economically justified for cost allocation. Production cost savings are to be determined by the PMC performing a product cost simulation to model the impact of the transmission project on production costs and congestion. Production cost savings will be calculated as the reduction in production costs between a production cost simulation with the project included compared to a simulation without the project. Reductions in reserve sharing requirements are to be determined by the PMC identifying a transmission project's impact on the reserve requirements of individual transmission systems, and not on the basis of the project's collective impact on a reserve sharing group, as a whole. The production cost models are to appropriately consider the hurdle rates between transmission systems. The following production cost principles may be applied:

- The production cost savings from a project must be present in each year from the project in-service date and extending out at least ten (10) years.
- Cost savings must be expressed in present-value dollars and should consider the impact of various fuel cost forecasts.
- The production cost study must account for contracts and agreements related to the use of the transmission system (this refers to paths in systems that might be contractually limited but not reliability limited).
- The production cost study must account for contracts and agreements related to the access and use of generation (this refers to generators that might only use spot purchases for fuel rather than firm purchases, or generation that has been designated as network resources for some entities and thus cannot be accessed at will by non-owners).

Access by Stakeholders to the PMC's application of its regional cost allocation method for a specific economic transmission project is available in several ways: First, Stakeholders that are members of the PMC will have firsthand knowledge of the way in which the regional method was applied to a particular project because the PMC is responsible for performing the application of the regional cost allocation method. Second, Stakeholders that choose not to become members of the PMC may access such information through the WestConnect regional Stakeholder process. See Section III.B of this Attachment R-PSCo. Third, the manner in which the PMC applied this methodology to allocate the costs of each economic project shall be described in the Regional Plan.

In determining which entities shall be allocated costs for economic projects, WestConnect shall compare the economic value of benefits received by an entity with the cost of the project to ensure that each entity allocated cost receives a benefit/cost ratio equal to the aggregate load-weighted benefit-to-cost ratio. These costs allocated to each company shall be calculated based on the following equation:

(1 divided by 2) times 3 equals 4

Where:

1 is the total projected present value of economic benefits for the relevant Transmission Owner
2 is the total projected present value of economic benefits for the entire project
3 is the total cost of the economic project

4 is the total cost allocated to the relevant Transmission Owner

Any Transmission Owner with benefits less than or equal to one percent of total project benefits shall be excluded from cost allocation. Where a project satisfies the B/C ratio, and is determined to provide benefits less than or equal to one percent of total project benefits to an identified Transmission Owner, such benefits will be re-allocated to all other identified beneficiaries on a pro rata basis, in relation to each entity's share of total project benefits.

3. Allocation of Costs for Public Policy Projects

Any transmission system additions that arise from Public Policy Requirements shall be included in the system models used for the WestConnect transmission system studies. Further, any additional system needs that arise from proposed public policy shall be reported by each entity for its own service territory. Decisions on the inclusion of those needs shall be made during the consideration and approval of the system models. Transmission needs driven by Public Policy Requirements will be included in the evaluation of reliability and economic projects.

Except for projects proposed through a Transmission Owner's local planning process, arising out of a local need for transmission infrastructure to satisfy Public Policy Requirements that are not submitted as projects proposed for cost allocation (which are addressed in Section II of this Attachment R-PSCo), any projects arising out of a regional need for transmission infrastructure to satisfy the Public Policy Requirements shall be considered public policy projects eligible for evaluation in the Regional Planning Process.

Stakeholders may participate in identifying regional transmission needs driven by Public Policy Requirements. After seeking the input of Stakeholders pursuant to the Stakeholder participation provisions of Section III, the PMC is to determine whether to move forward with the identification of a regional solution to a particular regional need driven by Public Policy Requirements. Stakeholders may participate in identifying a regional solution to a regional need driven by Public Policy Requirements pursuant to the Stakeholder participation provisions of Section III, or through membership on the PMC itself. After seeking the input of Stakeholders, the PMC is to determine whether to select a particular regional solution in the regional transmission plan for purposes of cost allocation. The identification of beneficiaries of these projects shall be the entities that shall access the resources enabled by the project in order to meet their Public Policy Requirements.

If an entity accesses resources that were enabled by a prior public policy project, that entity shall need to either share in its relative share of the costs of that public policy project or acquire sufficient transmission service rights to move the resources to its load with the determination left up to the entity or entities that were originally allocated the cost for the public policy project.

The costs for public policy projects shall be allocated according to the following equation:

(1 divided by 2) times 3 equals 4

Where:

1 is the number of megawatts of public policy resources enabled by the public policy project for the entity in question
2 is the total number of megawatts of public policy resources enabled by the public policy project
3 is the total project cost
4 is the cost for the public policy project allocated to the entity in question

The process to interconnect individual generation resources would be provided for under the generator interconnection section each utility's OATT and not under this process.

Requests for transmission service that originate in a member's system and terminate at the border shall be handled through that member's OATT. Regional transmission needs necessary to meet Public Policy Requirements shall be addressed through the Public Policy Requirements section of the Regional Planning Process.

The manner in which WestConnect applied this methodology to each public policy project shall be described in the Regional Transmission Plan.

4. Combination of Benefits

In developing a more efficient or cost-effective plan, it is possible for the plan to jointly consider multiple types of benefits when approving projects for inclusion in the Regional Plan. The determination to consider multiple types of benefits for a particular project shall be made through the WestConnect Stakeholder process, in which interested Stakeholders are given an opportunity to provide input as set forth in Section III of this Attachment R-PSCo. In determining whether a project would provide multiple benefits, the PMC is to categorize the benefits as (a) necessary to meet NERC Transmission Planning Reliability Standards (reliability); (b) achieving production cost savings or a reduction in reserve sharing requirements (economic); or (c) necessary to meet transmission needs driven by Public Policy Requirements, as applicable, using the methods set forth in this Attachment R-PSCo. The PMC will identify all three categories of benefits in its regional cost allocation process. If a project cannot pass the cost allocation threshold for any one of the three benefit categories, alone (reliability, economic or public policy), the sum of benefits from each benefit category may be considered.

- With respect to a reliability-driven regional transmission project, the quantified benefits of the project to each identified beneficiary must be greater, by a margin of 1.25 or more to 1, than the result of the equation identified in Section VI.B.1 above (where the result is shown as item 4 in the formula).
- With respect to an economic-driven regional transmission project, the quantified benefits of the project to each identified beneficiary must be greater than the project's cost to each beneficiary under each reasonable

scenario evaluated, and must yield an average ratio of at least 1.25 to 1 under all reasonable scenarios evaluated, as described in Section VI.B.2 above.

- With respect to a Public Policy Requirements-driven regional transmission project, the quantified benefits of the project to each identified beneficiary must be greater, by a margin of 1.25 or more to 1, than the result of the equation identified in Section VI.B.3 above (where the result is shown as item 4 in the formula).

If a single regional transmission project is determined to provide benefits in more than one category, but does not meet the cost threshold for any single category, the PMC may consider the sum of benefits from each benefit category to determine if the regional transmission project provides, in total, benefits per beneficiary that meet or exceed the region's 1.25 to 1 benefit to cost ratio. To illustrate, consider the following example where a regional project developed to provide public policy requirement benefits might also provide for economic benefits to the same beneficiaries:

A regional project submittal has undergone analysis for its quantifiable benefits and costs and is determined to cost $100 million and produce benefits to identified beneficiaries in two categories: economic benefits of $101 million (on average, under all economic scenarios quantified), and public policy requirement benefits of $70 million. The project is found to fail the cost threshold for each category, individually, but when the total benefits are combined and the project's total regional benefits per beneficiary are weighed against the project's total costs per beneficiary, the project can be found to meet or surpass the region's 1.25 to 1 benefit to cost ratio per beneficiary:

- The benefits to Beneficiary A of pursuing the regional solution (60% of the regional project's total $171 million in benefits) = $102.6 million. When $102.6 million in project benefits is compared against $60 million in project costs (60% of project costs), it yields a B/C ratio of 1.71 to 1 for Beneficiary A.

- The benefits to Beneficiary B of pursuing the regional solution (40% of the regional project's total $171 million in benefits) = $68.4 million. When $68.4 million in project benefits is compared against $40 million in project costs (40% of project costs), it yields a B/C ratio of 1.71 to 1 for Beneficiary B.

Even though the regional project does not pass the cost allocation threshold in any individual benefit category, the PMC may consider the sum of the project's benefits in all categories.

For those regional projects that satisfy the region's cost allocation threshold, the PMC then will continue its evaluation process by considering whether the regional project meets the region's identified reliability, economic and Public Policy Requirements-driven needs more efficiently or cost-effectively than solutions identified by individual transmission providers in their local transmission planning processes.

The costs for projects that rely upon multiple types of benefits to secure inclusion in the Regional Plan for purposes of cost allocation shall be shared according to the amount of cost that is justified by each type of benefits.

5. Allocation of Ownership and Capacity Rights

An Eligible Transmission Developer that is subject to the Commission's jurisdiction under Section 205 of the Federal Power Act may not recover project costs from identified beneficiaries in the WestConnect Planning Region without securing approval for project cost recovery from FERC through a separate proceeding brought by the Eligible Transmission Developer under Section 205 of the Federal Power Act. In no event will, identified beneficiaries in the WestConnect Planning Region from whom project costs are sought to be recovered under Section 205 be denied either transmission transfer capability or ownership rights proportionate to their allocated costs, as determined by FERC in such proceeding. An Eligible Transmission Developer that is not subject to the Commission's jurisdiction under Section 205 of the Federal Power Act would have to seek cost recovery from identified beneficiaries in the WestConnect Planning Region either: (a) through bilateral agreements that are voluntarily entered into between such Eligible Transmission Developer and the applicable identified beneficiaries; or (b) by obtaining approval from FERC for project cost recovery pursuant to any other applicable section of the Federal Power Act.

If a project beneficiary receives transmission transfer capability on the project in exchange for transmission service payments, such project beneficiary may resell the transfer capability. Alternatively, a project beneficiary could seek to make a direct capital contribution to the project construction cost (in lieu of making transmission service payments) in which case the project beneficiary would instead receive an ownership percentage in proportion to their capital contribution ("Ownership Proposal"). This Ownership Proposal does not create a right of first refusal for transmission beneficiaries.

An ownership alternative will only be pursued if the Eligible Transmission Developer agrees. The Eligible Transmission Developer and the beneficiaries will enter into contract negotiations to address the many details regarding the capital funding mechanics and timing, as well as other details, such as defining (as between the Eligible Transmission Developer, whether a nonincumbent or incumbent transmission developer, and those receiving ownership interests) responsibility for operations and maintenance, administrative tasks, compliance with governing laws and regulations, etc. These negotiations will take place at arm's length, without any one party having undue leverage over the other.

A transmission project beneficiary should not be expected to pay for its benefits from the project twice: once through a capital contribution, and again through

transmission service payments. The Ownership Proposal permits an ownership share in a project that is in the same proportion to a beneficiary's allocable costs, which costs will have been allocated roughly commensurate with the benefits to be gained from the project. This will allow the beneficiary to earn a return on its investment. In addition, it allows those beneficiaries that may not necessarily benefit from additional transfer capability on a new transmission project, whether due to lack of contiguity to the new facilities or otherwise, to realize the benefits through an ownership option.

Any transmission project participant that is identified as a beneficiary of the project might be permitted by the Eligible Transmission Developer to contribute capital (in lieu of transmission service payments) and receive a proportionate share of ownership rights in the transmission project. The Ownership Proposal affords an identified beneficiary who contributes toward the project costs the opportunity to obtain an ownership interest in lieu of an allocated share of the project costs through transmission service payments for transfer capability on the project; it does not, however, confer a right to invest capital in a project. The Ownership Proposal merely identifies that, to the extent it is agreed among the parties that capital may be contributed toward a transmission project's construction, a proportionate share of ownership rights will follow.

Nothing in this Attachment R-PSCo with respect to Order No. 1000 cost allocation imposes any new service on beneficiaries. Similarly, nothing in this Attachment R-PSCo with respect to Order No. 1000 cost allocation imposes on an Eligible Transmission Developer an obligation to become a provider of transmission services to identified beneficiaries simply as a result of a project's having been selected in the Regional Plan for purposes of cost allocation; provided, however, if that Eligible Transmission Developer seeks authorization to provide transmission services to beneficiaries or others, and to charge rates or otherwise recover costs from beneficiaries or others associated with any transmission services it were to propose, it must do so by contract and/or under separate proceedings under the Federal Power Act. The purpose of this Section VI.B.5 is to (a) provide an option to a project developer to negotiate ownership rights in the project with identified beneficiaries, if both the developer and the identified beneficiaries mutually desire to do so, (b) specify that, although Order No. 1000 cost allocation does not impose any new service on beneficiaries, identified beneficiaries have the opportunity to discuss with the project developer the potential for entering into transmission service agreements for transmission capacity rights in the project, and (c) ensure that Order No. 1000 cost allocation does not mean that a project developer may recover project costs from identified beneficiaries without providing transmission transfer capability or ownership rights, and without securing approval for project cost recovery by contract and/or under a separate proceeding under the Federal Power Act.

If an Eligible Transmission Developer is not subject to FERC's jurisdiction under Section 205 of the Federal Power Act, the Eligible Transmission Developer would have to seek to recover project costs from identified beneficiaries in the WestConnect Planning Region either: (a) through bilateral agreements that are voluntarily entered into between such Eligible Transmission Developer and the applicable identified beneficiaries; or (b) by

obtaining approval from FERC for project cost recovery pursuant to any other applicable section of the Federal Power Act.

6. Project Development Schedule

The WestConnect PMC will not be responsible for managing the development of any project selected for inclusion in the Regional Plan. However, after having selected a project in the Regional Plan, the PMC will monitor the status of the project's development. If a transmission facility is selected for inclusion in the Regional Plan for purposes of cost allocation, the transmission developer of that transmission facility must submit a development schedule that indicates the required steps, such as the granting of state approvals, necessary to develop and construct the transmission facility such that it meets the regional transmission needs of the WestConnect Planning Region. As part of the ongoing monitoring of the status of the transmission project once it is selected, the Transmission Owners and Providers in the WestConnect Planning Region shall establish the dates by which the required steps to construct must be achieved that are tied to when construction must begin to timely meet the need that the project is selected to address. If such required steps have not been achieved by those dates, then the Transmission Owners and Providers in the WestConnect Planning Region may remove the transmission project from the selected category and proceed with reevaluating the Regional Plan to seek an alternative solution.

7. Economic Benefits or Congestion Relief

For a transmission project wholly within the Transmission Provider's local transmission system that is undertaken for economic reasons or congestion relief at the request of a Requester, the project costs will be allocated to the Requester.

8. PSCo Rate Recovery

Notwithstanding the foregoing provisions, PSCo shall not assume cost responsibility for any transmission project if the cost of the project is not reasonably expected to be recoverable in PSCo's retail and/or wholesale transmission rates.

9. Selection of a Transmission Developer for Sponsored and Unsponsored Projects

For any project (sponsored or unsponsored) determined by the PMC to be eligible for regional cost allocation and selected in the Regional Plan for purposes of cost allocation, the PMC shall select a transmission project developer according to the processes set forth in this section, provided that selection according to those processes does not violate applicable law where the transmission facility is to be built that otherwise prescribes the entity that shall develop and build the project. Any entity that, pursuant to applicable law for the location where the facilities are to be built, shall or chooses to develop and build the project must submit a project development schedule as required by Section VI.B.6 of this Attachment R-PSCo, within the timeframe directed by the Business Practice Manual, not to exceed the time period for request for proposal responses.

For any project determined by the PMC to be eligible for regional cost allocation and selected in the Regional Plan for purposes of cost allocation, either sponsored by a transmission developer or unsponsored, that is not subject to the foregoing paragraph, the PMC shall upon posting the selected projects, issue a request for information to all Eligible Transmission Developers under Section III.D.3 of this Attachment R-PSCo soliciting their interest in developing the project(s). Each transmission developer shall respond to the request for information indicating its interest in developing the project. The PMC shall post on the WestConnect website the list of all transmission developers who responded with an expression of interest in developing the project(s). The PMC shall provide to each developer indicating interest in developing a project a request for proposals for the identified project(s) with a specified date of return for all proposals.

Each transmission developer, or partnership or joint ventures of transmission developers, shall submit information demonstrating its ability to finance, own and construct the project consistent with the guidelines for doing so set forth in the WestConnect Business Practices Manual. The PMC shall assess the submissions according to the following process and criteria:

The evaluation of the request for proposals will be at the direction of the PMC, and will involve representatives of the beneficiaries of the proposed project(s). The evaluation will include, but not be limited to, an assessment of the following evidence and criteria.

- General qualifications of the bidding entity;
- Evidence of financing/financial creditworthiness, including
  - financing plan (sources debt and equity), including construction financing and long-term financing
  - ability to finance restoration/forced outages
  - credit ratings
  - financial statements;
- Safety program and experience;
- Project description, including
  - detailed proposed project description and route
  - design parameters
  - design life of equipment and facilities
  - description of alternative project variations;
- Development of project, including

- o experience with and current capabilities and plan for obtaining state and local licenses, permits, and approvals
- o experience with and current capabilities and plan for obtaining any federal licenses and permits
- o experience with and expertise and plan for obtaining rights of way
- o development schedule
- o development budget;

- Construction, including
  - o experience with and current capabilities and plan for project construction
  - o third party contractors
  - o procurement plan
  - o project management (cost and schedule control)
  - o construction schedule
  - o construction budget (including all construction and period costs;
- Operations, including
  - o experience with and current capabilities and plan for project operation
  - o experience with and current capabilities and plan for NERC compliance
  - o security program and plan
  - o storm/outage response plan
  - o reliability of facilities already in operation;
- Maintenance capabilities and plans for project maintenance (including staffing, equipment, crew training, and facilities);
- Project cost to beneficiaries, including
  - o total project cost (development, construction, financing, and other non-O&M costs)
  - o operation and maintenance costs, including evaluation of electrical losses
  - o revenue requirement, including proposed cost of equity, FERC incentives, proposed cost of debt and total revenue requirement calculation
  - o present value cost of project to beneficiaries.

The PMC shall notify the developers of its determination as to which developer(s) it selected to develop the project(s) responsive to the request for proposal. The selected developer(s) must submit a project development schedule as required by Section VI.B.6 of this Attachment R-PSCo.

If the PMC determines that a sponsored or unsponsored project fails to secure a developer through the process outlined in this section, the PMC shall remove the project from the Regional Plan.

After the PMC makes a determination, it will post a document on the WestConnect website within 60 days explaining the PMC's determination in selecting a particular transmission developer for a specific transmission project. The information will explain (1) the reasons why a particular transmission developer was selected or not selected, and, if applicable, (2) the reasons why a transmission project failed to secure a transmission developer.

10. <u>No Obligation to Construct</u>

The Regional Planning Process is intended to determine and recommend more efficient or cost-effective transmission solutions for the WestConnect Planning Region. After the Regional Plan is approved, due to the uncertainty in the planning process and the need to address cost recovery issues, the Regional Planning Process shall not obligate any entity to construct, nor obligate any entity to commit to construct, any facilities, including any transmission facilities, regardless of whether such facilities are included in any plan. Nothing in this Attachment R or the Planning Participation Agreement or any cost allocation under the Business Practice Manual or the Planning Participation Agreement will (1) determine any transmission service to be received by, or any transmission usage by, any entity, (2) obligate any entity to purchase or pay for, or obligate any entity to commit to purchase or pay for, any transmission service or usage, or (3) entitle any entity to recover for any transmission service or usage or to recover from any entity any cost of any transmission facilities, regardless of whether such transmission facilities are included in any plan. Without limiting the generality of the foregoing, nothing in this Attachment R, the Business Practice Manual or the Planning Participation Agreement with respect to an Order No. 1000 cost allocation shall preclude WestConnect or any other entity from carrying out any of its statutory authorities or complying with any of its statutory obligations.

11. Binding Order No. 1000 Cost Allocation Methods

Order No. 1000 cost allocation methods as set forth in Section VI of this Attachment R-PSCo are binding on identified beneficiaries enrolled in the WestConnect Planning Region, without prejudice to the following rights and obligations: (1) the right of a CTO, at its sole discretion, to decide whether to accept regional cost allocation in accordance with Section III.J; (2) the right and obligation of the PMC to reevaluate a transmission facility previously selected for inclusion in the regional plan for purposes of Order No. 1000 cost allocation under Section III.K of this Attachment R-PSCo; (3) the right and obligation of an Eligible Transmission Developer to make a filing under Section 205 or other applicable provision of the Federal Power Act in order to seek approval from the Commission to recover the costs of any transmission facility selected for inclusion in the regional plan for purposes of Order No. 1000 cost allocation; (4) the right and obligation of any interested person to intervene and be heard before the Commission in any Section 205 or other applicable provision proceeding initiated by an Eligible Transmission Developer, including the right of any identified beneficiaries of the transmission facility to support or protest the filing and to present evidence on whether the proposed cost recovery is or is not just and reasonable; and (5) the right and obligation of the Commission to act under Section 205 or other applicable provisions of the Federal Power Act to approve or deny any cost recovery sought by an Eligible Transmission Developer for a transmission facility selected in the regional plan for purposes of Order No. 1000 cost allocation.[1]

[1] An Eligible Transmission Developer may not be subject to the Commission's Section 205 jurisdiction. See Section VI.B.5. If an Eligible Transmission Developer is not subject to FERC's jurisdiction under Section 205 of the Federal Power Act, the Eligible Transmission Developer

.

12. Impacts of a Regional Project on Neighboring Planning Regions

The PMC is to study the impact(s) of a regional transmission project on neighboring planning regions, including the resulting need, if any, for mitigation measures in such neighboring planning regions. If the PMC finds that a regional transmission project in the WestConnect Planning Region causes impacts on a neighboring planning region that requires mitigation (a) by the WECC Path Rating Process, (b) under FERC OATT requirements, (c) under NERC Reliability Standards requirements, and/or (d) under any negotiated arrangement between the interconnected entities, the PMC is to include the costs of any such mitigation measures into the regional transmission project's total project costs for purposes of determining the project's eligibility for regional cost allocation under the procedures identified in Section VI.B of this Attachment R-PSCo, including application of the region's benefits-to-costs analysis.

The WestConnect Planning Region will not be responsible for compensating a neighboring planning region, Transmission Provider, Transmission Owner, Balancing Area Authority, or any other entity, for the costs of any required mitigation measures, or other consequences, on their systems associated with a regional transmission project in the WestConnect Planning Region, whether identified by the PMC or the neighboring system(s). The PMC does not direct the construction of transmission facilities, does not operate transmission facilities or provide transmission services, and does not charge or collect revenues for the performance of any transmission or other services. Therefore, in agreeing to study the impacts of a regional transmission facility on neighboring planning regions, the PMC is not agreeing to bear the costs of any mitigation measures it identifies. However, the PMC will request of any developer of a regional transmission project selected in the Regional Plan for purposes of cost allocation that the developer design and build its project to mitigate the project's identified impacts on neighboring planning regions. If the project is identified as impacting a neighboring planning region that accords less favorable mitigation treatment to the WestConnect Planning Region than the WestConnect Planning Region accords to it, the PMC will request that the project developer reciprocate by using the lesser of (i) the neighboring region's mitigation treatment applicable to the mitigation of impacts of its own regional projects on the WestConnect Planning Region, or (ii) the PMC's mitigation treatment set forth above in sub-sections (a) through (d).

13. Exclusions

The cost for transmission projects undertaken in connection with requests for generation interconnection or transmission service on the PSCo transmission system, which are governed by existing cost allocation methods within the OATT, shall continue to be so governed and shall not be subject to the principles of this Section VI.

---

would have to seek to recover project costs from identified beneficiaries in the WestConnect Planning Region either: (a) through bilateral agreements that are voluntarily entered into between such Eligible Transmission Developer and the applicable identified beneficiaries; or (b) by obtaining approval from the Commission for project cost recovery pursuant to any other applicable section of the Federal Power Act.

As provided in Section 13.5 (Transmission Customer Obligations for Facility Additions and Redispatch Costs), Section 27 (Compensation for New Facilities and Redispatch Costs) and Section 31.2 (New Network Loads Connected with the Transmission Provider) of the OATT, and the Transmission Customer's individual service agreement (if applicable), the Transmission Customer or requester shall be responsible for the installed cost of all new load serving interconnections or upgrades to existing load serving interconnections.

More information regarding this direct cost assignment provision of the Xcel Energy load interconnection cost allocation policy is available by accessing the link in the PSCo Attachment R Hyperlinks List posted on the PSCo OASIS [www.oatioasis.com/PSCO/].

In the event of an inconsistency between this Attachment R-PSCo and the Xcel Energy load interconnection cost allocation policy, this Attachment R-PSCo shall control.

VII. Interregional Planning

This Part VII of Attachment R-PSCo sets forth common provisions, which are to be adopted by or for each Planning Region and which facilitate the implementation of Order 1000 interregional provisions. WestConnect is to conduct the activities and processes set forth in this Part VII of this part of Attachment R-PSCo in accordance with the provisions of this Part VII of this part of Attachment R-PSCo and the other provisions of this Attachment R-PSCo.

Nothing in this part will preclude any transmission owner or transmission provider from taking any action it deems necessary or appropriate with respect to any transmission facilities it needs to comply with any local, state, or federal requirements.

Any Interregional Cost Allocation regarding any ITP (as defined herein) is solely for the purpose of developing information to be used in the regional planning process of each Relevant Planning Region, including the regional cost allocation process and methodologies of each such Relevant Planning Region.

References in this Part VII to any transmission planning processes, including cost allocations, are references to transmission planning processes pursuant to Order 1000.

A. Definitions

The following capitalized terms where used in this Part VII of Attachment R-PSCo, are defined as follows:

Annual Interregional Coordination Meeting: shall have the meaning set forth in Section VII.C below.

Annual Interregional Information: shall have the meaning set forth in Section VII.B below.

Interregional Cost Allocation: means the assignment of ITP costs between or among Planning Regions as described in Section VII.E.2 below.

Interregional Transmission Project ("ITP"): means a proposed new transmission project that would directly interconnect electrically to existing or planned transmission facilities in two or more Planning Regions and that is submitted into the regional transmission planning processes of all such Planning Regions in accordance with Section VII.D.1.

Order 1000 Common Interregional Coordination and Cost Allocation Tariff Language: means this Part VII, which relates to Order 1000 interregional provisions.

Planning Region: means each of the following Order 1000 transmission planning regions insofar as they are within the Western Interconnection: California Independent System Operator Corporation, ColumbiaGrid, Northern Tier Transmission Group, and WestConnect.

Relevant Planning Regions: means, with respect to an ITP, the Planning Regions that would directly interconnect electrically with such ITP, unless and until such time as a Relevant Planning Region determines that such ITP will not meet any of its regional transmission needs in accordance with Section VII.D.2, at which time it shall no longer be considered a Relevant Planning Region.

B. Annual Interregional Information Exchange

Annually, prior to the Annual Interregional Coordination Meeting, WestConnect is to make available by posting on its website or otherwise provide to each of the other Planning Regions the following information, to the extent such information is available in its regional transmission planning process, relating to regional transmission needs in WestConnect's transmission planning region and potential solutions thereto:

(i) study plan or underlying information that would typically be included in a study plan, such as:

(a) identification of base cases;

(b) planning study assumptions; and

(c) study methodologies;

(ii) initial study reports (or system assessments); and

(iii) regional transmission plan

(collectively referred to as "Annual Interregional Information").

WestConnect is to post its Annual Interregional Information on its website according to its regional transmission planning process. Each other Planning Region may use in its regional transmission planning process WestConnect's Annual Interregional Information. WestConnect may use in its regional transmission planning process Annual Interregional Information provided by other Planning Regions.

WestConnect is not required to make available or otherwise provide to any other Planning Region (i) any information not developed by WestConnect in the ordinary course of its regional transmission planning process, (ii) any Annual Interregional Information to be provided by any other Planning Region with respect to such other Planning Region, or (iii) any information if WestConnect reasonably determines that making such information available or otherwise providing such information would constitute a violation of the Commission's Standards of Conduct or any other legal requirement. Annual Interregional Information made available or otherwise provided by WestConnect shall be subject to applicable confidentiality and CEII restrictions and other applicable laws, under WestConnect's regional transmission planning process. Any Annual Interregional Information made available or otherwise provided by WestConnect shall be "AS IS" and any reliance by the receiving Planning Region on such Annual Interregional Information is at its own risk, without warranty and without any liability of WestConnect, including any liability for (a) any errors or omissions in such Annual Interregional Information, or (b) any delay or failure to provide such Annual Interregional Information.

C. Annual Interregional Coordination Meeting

WestConnect is to participate in an Annual Interregional Coordination Meeting with the other Planning Regions. WestConnect is to host the Annual Interregional Coordination Meeting in turn with the other Planning Regions, and is to seek to convene such meeting in February, but not later than March 31st. The Annual Interregional Coordination Meeting is to be open to stakeholders. WestConnect is to provide notice of the meeting to its stakeholders in accordance with its regional transmission planning process.

At the Annual Interregional Coordination Meeting, topics discussed may include the following:

(i) each Planning Region's most recent Annual Interregional Information (to the extent it is not confidential or protected by CEII or other legal restrictions);

(ii) identification and preliminary discussion of interregional solutions, including conceptual solutions, that may meet regional transmission needs in each of two or more Planning Regions more cost effectively or efficiently; and

(iii) updates of the status of ITPs being evaluated or previously included in WestConnect's regional transmission plan.

D. ITP Joint Evaluation Process

1. Submission Requirements

A proponent of an ITP may seek to have its ITP jointly evaluated by the Relevant Planning Regions pursuant to Section VII.D.2 by submitting the ITP into the regional transmission planning process of each Relevant Planning Region in accordance with such Relevant Planning Region's regional transmission planning process and no later than March 31st of any even-numbered calendar year. Such proponent of an ITP seeking to connect to a transmission facility owned by multiple transmission owners in more than one Planning Region must submit the ITP to each such Planning Region in accordance with such Planning Region's regional transmission planning process. In addition to satisfying each Relevant Planning Region's information requirements, the proponent of an ITP must

include with its submittal to each Relevant Planning Region a list of all Planning Regions to which the ITP is being submitted.

2. Joint Evaluation of an ITP

For each ITP that meets the requirements of Section VII.D.1, WestConnect (if it is a Relevant Planning Region) is to participate in a joint evaluation by the Relevant Planning Regions that is to commence in the calendar year of the ITP's submittal in accordance with Section VII.D.1 or the immediately following calendar year. With respect to any such ITP, WestConnect (if it is a Relevant Planning Region) is to confer with the other Relevant Planning Region(s) regarding the following:

(i) ITP data and projected ITP costs; and

(ii) the study assumptions and methodologies it is to use in evaluating the ITP pursuant to its regional transmission planning process.

For each ITP that meets the requirements of Section VII.D.1, WestConnect (if it is a Relevant Planning Region):

(a) is to seek to resolve any differences it has with the other Relevant Planning Regions relating to the ITP or to information specific to other Relevant Planning Regions insofar as such differences may affect WestConnect's evaluation of the ITP;

(b) is to provide stakeholders an opportunity to participate in WestConnect's activities under this Section VII.D.2 in accordance with its regional transmission planning process;

(c) is to notify the other Relevant Planning Regions if WestConnect determines that the ITP will not meet any of its regional transmission needs; thereafter WestConnect has no obligation under this Section VII.D.2 to participate in the joint evaluation of the ITP; and

(d) is to determine under its regional transmission planning process if such ITP is a more cost effective or efficient solution to one or more of WestConnect's regional transmission needs.

E. Interregional Cost Allocation Process

1. Submission Requirements

For any ITP that has been properly submitted in each Relevant Planning Region's regional transmission planning process in accordance with Section VII.D.1, a proponent of such ITP may also request Interregional Cost Allocation by requesting such cost allocation from WestConnect and each other Relevant Planning Region in accordance with its regional transmission planning process. The proponent of an ITP must include with its submittal to each Relevant Planning Region a list of all Planning Regions in which Interregional Cost Allocation is being requested.

2. Interregional Cost Allocation Process

For each ITP that meets the requirements of Section VII.E.1, WestConnect (if it is a Relevant Planning Region) is to confer with or notify, as appropriate, any other Relevant Planning Region(s) regarding the following:

(i) assumptions and inputs to be used by each Relevant Planning Region for purposes of determining benefits in accordance with its regional cost allocation methodology, as applied to ITPs;

(ii) WestConnect's regional benefits stated in dollars resulting from the ITP, if any; and

(iii) assignment of projected costs of the ITP (subject to potential reassignment of projected costs pursuant to Section VII.F.2 below) to each Relevant Planning Region using the methodology described in this Section VII.E.2.

For each ITP that meets the requirements of Section VII.E.1, WestConnect (if it is a Relevant Planning Region):

(a) is to seek to resolve with the other Relevant Planning Regions any differences relating to ITP data or to information specific to other Relevant Planning Regions insofar as such differences may affect WestConnect's analysis;

(b) is to provide stakeholders an opportunity to participate in WestConnect's activities under this Section VII.E.2 in accordance with its regional transmission planning process;

(c) is to determine its regional benefits, stated in dollars, resulting from an ITP; in making such determination of its regional benefits in WestConnect, WestConnect is to use its regional cost allocation methodology, as applied to ITPs;

(d) is to calculate its assigned *pro rata* share of the projected costs of the ITP, stated in a specific dollar amount, equal to its share of the total benefits identified by the Relevant Planning Regions multiplied by the projected costs of the ITP;

(e) is to share with the other Relevant Planning Regions information regarding what its regional cost allocation would be if it were to select the ITP in its regional transmission plan for purposes of Interregional Cost Allocation; WestConnect may use such information to identify its total share of the projected costs of the ITP to be assigned to WestConnect in order to determine whether the ITP is a more cost effective or efficient solution to a transmission need in WestConnect;

(f) is to determine whether to select the ITP in its regional transmission plan for purposes of Interregional Cost Allocation, based on its regional transmission planning process; and

(g) is to endeavor to perform its Interregional Cost Allocation activities pursuant to this Section VII.E.2 in the same general time frame as its joint evaluation activities pursuant to Section VII.D.2.

F. Application of Regional Cost Allocation Methodology to Selected ITP

1. Selection by All Relevant Planning Regions

If WestConnect (if it is a Relevant Planning Region) and all of the other Relevant Planning Regions select an ITP in their respective regional transmission plans for purposes of Interregional Cost Allocation, WestConnect is to apply its regional cost allocation methodology to the projected costs of the ITP assigned to it under Section VII.E.2(d) or VII.E.2(e) above in accordance with its regional cost allocation methodology, as applied to ITPs.

2. Selection by at Least Two but Fewer than All Relevant Regions

If WestConnect (if it is a Relevant Planning Region) and at least one, but fewer than all, of the other Relevant Planning Regions select the ITP in their respective regional transmission plans for purposes of Interregional Cost Allocation, WestConnect is to evaluate (or reevaluate, as the case may be) pursuant to Sections VII.E.2(d), VII.E.2(e), and VII.E.2(f) above whether, without the participation of the non-selecting Relevant Planning Region(s), the ITP is selected (or remains selected, as the case may be) in its regional transmission plan for purposes for Interregional Cost Allocation. Such reevaluation(s) are to be repeated as many times as necessary until the number of selecting Relevant Planning Regions does not change with such reevaluation.

If following such evaluation (or reevaluation), the number of selecting Relevant Planning Regions does not change and the ITP remains selected for purposes of Interregional Cost Allocation in the respective regional transmission plans of WestConnect and at least one other Relevant Planning Region, WestConnect is to apply its regional cost allocation methodology to the projected costs of the ITP assigned to it under Sections VII.E.2(d) or VII.E.2(e) above in accordance with its regional cost allocation methodology, as applied to ITPs.

VIII. Recovery of Planning Costs

PSCo's costs associated with the Regional Planning Process, including WestConnect's participation in interregional planning under Part VII, shall be recovered through existing rate structures. The costs for any local economic planning study beyond the three priority local economic planning studies funded by PSCo shall be paid for by the Requester of those studies, as set forth in Section II.D.6. Any costs incurred by Stakeholders for their participation in the PSCo local planning processes shall be borne by those Stakeholders.

For the costs of studies associated with specific wholesale delivery point requests by NITS or PTP customers taking service under the OATT, the requesting customer shall be responsible for the actual costs of such studies. The customer shall pay the full estimated cost prior to PSCo beginning the study, and PSCo shall either refund any over-collection or bill any under-collection after completion of the study.

For the costs for any special study requested by a Stakeholder, the Stakeholder shall be responsible for the actual costs of the study. The Stakeholder shall pay to PSCo the full estimated cost prior to PSCo beginning the study, and PSCo shall either refund any over-collection or bill any under-collection after completion of the study.

PSCo recovers its system planning costs in multiple ways. Transmission planning costs are recovered in part under Attachment O-PSCo to the OATT, grandfathered transmission contracts, Colorado retail base rates, and a Colorado retail Transmission Cost Adjustment Rider. The costs

of PSCo's participation in the Regional Planning Process will be included both retail and wholesale transmission rates, as appropriate. Each of these means of cost recovery is described below.

PSCo's OATT has approved rates for transmission service, which are derived under a formula methodology that is updated annually. Within the costs included in PSCo's transmission formula rate are both transmission plant and O&M expenses. Planning activities that are performed for the construction of specific transmission facilities in service are capitalized as transmission plant. General planning cost activities, such as interregional and regional planning (WECC and WestConnect), are recorded as O&M expenses. Therefore, a portion of the transmission planning costs is recovered through the administration of transmission service via the OATT.

PSCo also provides service under a few grandfathered transmission contracts with transmission charges approved by FERC. These transmission charges reflect the recovery of that portion of the Company's planning costs that was included in the transmission plant and O&M expenses in the test year used to establish these charges.

PSCo has retail rates approved by the Colorado Public Utilities Commission, which include a transmission expense (both Plant and O&M). Planning activities that are performed for the construction of specific transmission facilities that go into service are capitalized as transmission plant. General planning cost activities, such as interregional and regional planning (WECC and WestConnect), are recorded as O&M expenses. The Company applies a jurisdictional split between retail and wholesale when developing a transmission revenues requirement for setting retail rates. Thus, the revenues collected under the OATT are not included in retail rates.

The Colorado Public Utilities Commission has approved a Transmission Cost Adjustment ("TCA") that is applicable to new transmission plant in service that is not already in retail rates. The TCA recovery includes transmission planning expenses associated with specific new transmission plant in service. The TCA recovery mechanism applies to PSCo retail customers only.

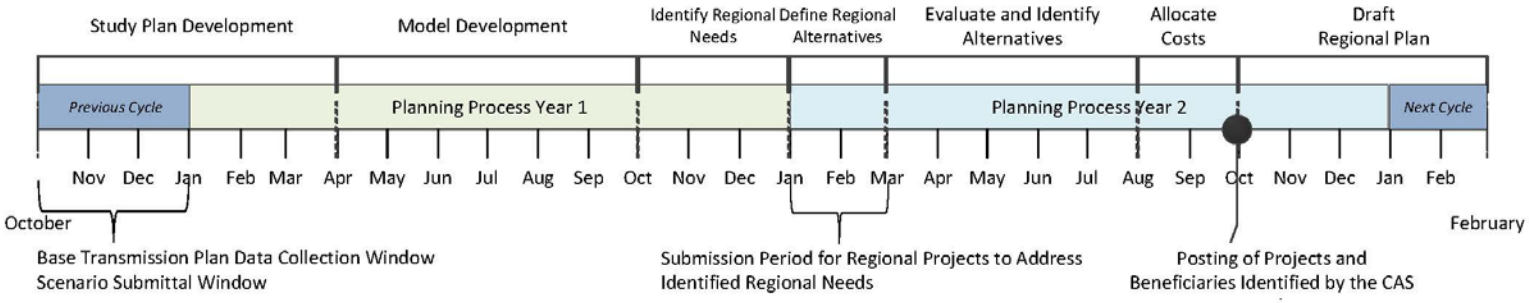

Regional Planning Process Activity	Activity Timeframe
Stakeholder meetings	WestConnect will hold open stakeholder meetings on at least a semi-annual basis, or as needed and noticed by the PMC with 30 days advance notice, to update stakeholders about its progress in developing the Regional Plan and to solicit input regarding material matters of process related to the regional transmission plan.
Base transmission plan data collection window	The PS will initiate development of the base transmission plan no later than Quarter 8 of the previous biennial planning cycle and in conjunction with initiating the development of the Regional Study Plan. The submittal window for projects to be considered as part of the base transmission plan will be noticed a minimum of 15 days before the window opens, and the submittal window will stay open for a minimum of 30 days.
Scenario submittal window	A scenario submittal window will open when the development of the Regional Study Plan commences and no later than Quarter 8 of the previous biennial planning cycle. The scenario submittal window will be noticed a minimum of 15 days before the window opens, and the submittal window will stay open for a minimum of 30 days.
Identification of regional needs	Identified regional needs will be posted to the WestConnect website no later than close of Quarter 4 of the first year of the biennial cycle.
Submission Period for Regional Projects to Address Identified Regional Needs	For consideration in the current planning cycle, projects must be submitted following the posting of identified regional needs to the WestConnect website, and must occur before the end of Quarter 5 of the biennial planning cycle. Any project submitted after this date will be considered in the next subsequent planning cycle.

S Form of Svc Agmt for Reserve Sharing Energy Service Version: 0.1.0 Effective: 3/1/2014

ATTACHMENT S

Reserved For Future Use

ATTACHMENT T

Form of Service Agreement For Balancing Authority Ancillary Services Applicable to the Public Service Company of Colorado (PSCo) System

1.0 This Balancing Authority Ancillary Services Agreement ("Agreement") is entered into as of the date provided below by and between Public Service Company of Colorado ("Service Provider" or "BA Operator"), and _____ _____ ("Ancillary Service Customer"), each of whom may be referred to individually as "Party" or jointly as "Parties".

2.0 Service Provider has established Part IV to its Open Access Transmission Tariff (Tariff) to provide Balancing Authority Services to Ancillary Service Customers located within Service Provider's Balancing Authority Area. Service Provider has determined that the Ancillary Service Customer is subject to certain ancillary services and requirements due to the presence of its generation or loads in the Service Provider's Balancing Authority Area. The Ancillary Service Customer, in turn, acknowledges that it is subject to the attached Specifications for Balancing Authority Area Ancillary Services, as applicable.

3.0 The Ancillary Service Customer agrees to supply to the BA Operator information reasonably necessary in accordance with Good Utility Practice, applicable North American Electric Reliability Corporation (NERC) or Western Electricity Coordinating Council (WECC) reliability standards, and Part IV of the Tariff.

4.0 This Agreement shall become effective [insert date], 20__, and shall be in effect for an initial term of one (1) year, and shall thereafter roll-over from year-to-year unless terminated by written notice. Either Party may terminate this Agreement at any time by providing a one (1) year advance written notice to the other Party; provided, that if Service Provider, at its sole discretion, determines that the Ancillary Service Customer should no longer be subject to any provisions, ancillary services, or requirements specified hereunder, Service Provider may terminate this Agreement; and provided further, that no such termination notice shall be effective until the completion or termination of any ongoing transaction and the settlement of all accounts pursuant to Part IV of the Tariff and this Agreement.

5.0 The Service Provider agrees to provide and the Ancillary Service Customer agrees to take and pay for Balancing Authority services detailed in Attachment T-1 in accordance with the Tariff and this Agreement. This Agreement in no way obligates Service Provider to provide any other Tariff service to the Balancing Authority Area Customer. The Ancillary Service Customer may request such other services under the Tariff, and will be subject to the Tariff for such other services.

6.0 Service Provider's Tariff, including the Tariff's applicable Ancillary Service provisions and associated Schedules, as presently constituted or as they may be revised or superseded, are made a part of this Agreement, as necessary.

7.0 Service Provider may unilaterally revise charges set forth under this Agreement pursuant to applicable Federal laws, regulations and policies upon applicable written notice to the Ancillary Service Customer.

8.0 Any notice or request made to or by either Party regarding this Agreement, shall be made to the representative of the other Party as indicated below:

Service Provider:

Public Service Company of Colorado
Attn: Transmission Account Representative
18201 West 10th Avenue
Golden, CO 80401

Ancillary Service Customer:

_____
_____
_____

9.0 This Agreement may be executed in counterparts, each of which shall be deemed to be an original and all of which shall constitute one and the same document.

IN WITNESS WHEREOF, the Parties have caused this Service Agreement to be executed by their respective authorized officials.

Service Provider:

By:

Name	Title	Date

Ancillary Service Customer:

By:

Name	Title	Date

Attachment T-1

Specification of Balancing Authority Services and Requirements

1.0 Term of Transaction:

Start Date:

This Service Agreement shall be in effect until terminated as provided in Section 4.0 of this Agreement.

2.0 Specification of the ancillary services and requirements herein does not supersede any other agreement(s) entered into by the Parties. Check items that apply:

___ Scheduling, System Control, and Dispatch Service: Schedule 1.

___ Reactive Supply and Voltage Control Service: Schedule 2.

___ Regulation and Frequency Response Service: Schedule 3.

___ Energy Imbalance Service: Service Provider Schedule 4.

___ Operating Reserves – Spinning Reserve Service: Schedule 5.

___ Operating Reserves – Supplemental Reserve Service: Schedule 6.

___ Generator Imbalance Service: Schedule 9.

___ Real Power Losses.

3.0 Ancillary Services Customer will indicate the ancillary service(s) that shall be self-provided and a brief description of the method(s) used for self-provision. Check items that apply:

___ Reactive Supply and Voltage Control Service: Schedule 2.
Description:

___ Regulation and Frequency Response Service: Schedule 3.
Description:

___ Energy Imbalance Service: Schedule 4.
Description:

___ Operating Reserves – Spinning Reserve Service: Schedule 5.
Description:

___ Operating Reserves – Supplemental Reserve Service: Schedule 6.
Description:

___ Generator Imbalance Service: Rate Schedule 9.
Description:

___ Real Power Losses.
Description:

4.0 Designated Meters

The Ancillary Services Customer will be charged monthly for ancillary services based on the items checked above, based on the Ancillary Services Customer's billing demand for such month recorded on the following meter(s) or other mutually agreed upon method as specified in this Service Agreement.

Meter Name	Meter ID Number

ATTACHMENT U

Form of Service Agreement For Transmission to Load Interconnection Service

Between

Northern States Power Company, a Minnesota corporation,

Northern States Power Company, a Wisconsin corporation

and

[Insert Interconnection Customer Name]

Dated as of _____, 20__

Version 0.0.2

TABLE OF CONTENTS

XCEL ENERGY OPERATING COs JOINT OATT Version: 0.0.0 Effective: 7/30/2010 1

NERC Standards: 169

NERC Documents: 170

Fast Track Eligibility for Inverter-Based Systems 613

Line Voltage 613

Fast Track Eligibility Regardless of Location 613

Fast Track Eligibility on a Mainline[1] and ≤ 2.5 Electrical Circuit Miles from Substation[2] 613

< 5 kV 613

≤ 500 kW 613

≤ 500 kW 613

≥ 5 kV and < 15 kV 613

≤ 2 MW 613

≤ 3 MW 613

≥ 15 kV and < 30 kV 613

≤ 3 MW 613

≤ 4 MW 613

≥ 30 kV and ≤ 69 kV 613

≤ 4 MW 613

≤ 5 MW 613

ARTICLE I Definitions 779

ARTICLE II SCOPE 783

ARTICLE III TERMS AND TERMINATION 784

ARTICLE IV OWNERSHIP, CONSTRUCTION, OPERATION AND MAINTENANCE 784

ARTICLE V OUTAGES AND COORDINATION 789

ARTICLE VI SAFETY 791

ARTICLE VII Environmental CONSIDERATIONS 792

ARTICLE VIII FORCE MAJEURE 792

ARTICLE IX Billing and Payment 793

ARTICLE X NOTICES 793

ARTICLE XI REGULATION AND MODIFICATION OF RATES 793

ARTICLE XII ASSIGNMENT 794

ARTICLE XIII Insurance 794

ARTICLE XIV consequential damages, Indemnity and RISK OF LOSS 795

ARTICLE XV DEFAULT AND TERMINATION 796

ARTICLE XVI Dispute resolution 797

ARTICLE XVII CONFIDENTIAL INFORMATION 798

ARTICLE XVIII miscellaneous 799

Signatures 801

ATTACHMENT U-1 812

2.0 Process for Requesting a New or Modified Load Interconnection 812

3.1 Facility Cost Responsibility 814

3.2 Transmission Provider Interconnection Facilities 814

3.3 Network Upgrades 815

3.4 Other Requirements 815

4.0 Outages 816

5.0 Annual Interconnection Forecasts and Other Information Requirements 816

ATTACHMENT U-1 819

ARTICLE I DEFINITIONS 890

ARTICLE II SCOPE 894

ARTICLE III TERMS AND TERMINATION 895

ARTICLE IV OWNERSHIP, CONSTRUCTION, OPERATION AND MAINTENANCE 896

ARTICLE V OUTAGES AND COORDINATION 900

ARTICLE VI SAFETY 903

ARTICLE VII ENVIRONMENTAL CONSIDERATIONS 904

ARTICLE VIII FORCE MAJEURE 904

ARTICLE IX BILLING AND PAYMENT **905**

ARTICLE X NOTICES **905**

ARTICLE XI REGULATION AND MODIFICATION OF RATES **905**

ARTICLE XII ASSIGNMENT **906**

ARTICLE XIII INSURANCE **906**

ARTICLE XIV CONSEQUENTIAL DAMAGES, INDEMNITY AND RISK OF LOSS **908**

ARTICLE XV DEFAULT AND TERMINATION **909**

ARTICLE XVI DISPUTE RESOLUTION **910**

ARTICLE XVII CONFIDENTIAL INFORMATION **910**

ARTICLE XVIII MISCELLANEOUS **912**

SIGNATURES **914**

This TRANSMISSION TO LOAD INTERCONNECTION AGREEMENT ("Interconnection Agreement") is dated as of this ___ day of [insert month], 20__, between **[insert]**, hereinafter called "Interconnection Customer", and Northern States Power Company, a Minnesota corporation ("NSPM") and Northern States Power Company, a Wisconsin corporation ("NSPW"), hereinafter jointly called "NSP" or "Transmission Provider". For purposes of this Interconnection Agreement, "Party" shall mean Interconnection Customer or Transmission Provider, and "Parties" shall mean Interconnection Customer and Transmission Provider.

RECITALS

0.01 **WHEREAS,** NSPM and NSPW are, *inter alia*, investor owned electric utilities engaged in the business of generating, transmitting, distributing, and selling electric power and energy and related services in the States of Minnesota, North Dakota, South Dakota, Wisconsin and Michigan subject to, *inter alia*, the jurisdiction of the Federal Energy Regulatory Commission ("FERC"); and

0.02 **WHEREAS**, NSPM and NSPW operate an integrated electric transmission system ("NSP System" or "Transmission Provider's Transmission System") pursuant to the "Restated Agreement to Coordinate Planning and Operations and Interchange Power and Energy" between NSPM and NSPW ("Interchange Agreement"); and

0.03 **WHEREAS**, Transmission Provider has filed and the FERC has accepted the Xcel Energy Operating Companies Open Access Transmission Tariff ("Tariff"), as amended or supplemented from time to time, through which interconnection service to Interconnection Customer is to be provided; and

0.04 **WHEREAS,** Interconnection Customer is a **[insert entity description]** and owns and operates load serving electric distribution [and generation] facilities in the State of **[insert]**; and

0.05 **WHEREAS,** Interconnection Customer desires interconnection service at the Interconnection Customer's Interconnection Facilities; and

0.06 **WHEREAS**, the Parties agree to execute this Interconnection Agreement to provide the terms and conditions for interconnection of Interconnection Customer's facilities with Transmission Provider's electrical system and to define the continuing rights, responsibilities, and obligations of the Parties with respect to the use of certain of their own and the other Party's property, assets, and facilities; and

0.07 **WHEREAS**, the Parties desire to avail themselves of mutual benefits of coordinating the development and operations of their respective systems with respect to the Interconnection Facilities.

NOW THEREFORE, the Parties agree as follows:

ARTICLE I
DEFINITIONS

Section 1.01 Rules of Construction

Capitalized terms used in this Interconnection Agreement shall have the meanings set forth above, in this Article I, or as set forth in the Tariff, whether in the singular or the plural or in the present or past tense. Other terms used in this Interconnection Agreement but not so defined shall have meanings as commonly used in the English language and, where applicable, in Good Utility Practice. Words not otherwise defined herein that have well known and generally accepted technical or trade meanings are used herein in accordance with such recognized meanings.

Section 1.02 Good Faith and Fair Dealing

The Parties shall act reasonably and in accordance with the principles of good faith and fair dealing in the performance of this Interconnection Agreement. Unless expressly provided otherwise in this Interconnection Agreement or in the Tariff, (a) where the consent, approval, or similar action is required by a Party, such consent or approval shall not be unreasonably withheld, conditioned or delayed; and (b) wherever a Party has the right to determine, require, specify or take similar action with respect to a matter, such determination, requirement, specification or similar action shall be reasonable.

Section 1.03 General Provisions

The Parties recognize and agree that this Interconnection Agreement is entered into pursuant to and in accordance with NSP's obligations as a Transmission Provider under the Tariff and that NSP is acting in such capacity in entering into this Interconnection Agreement.

(a) In the event Interconnection Customer enters into any agreements with NSP or an Affiliate that are not in NSP's capacity as a Transmission Provider under the Tariff (*e.g.*, power purchase or retail service agreements), the Parties acknowledge and agree that such agreements shall be deemed to be separate and free-standing contracts that do not alter the terms of this Interconnection Agreement except to the extent specified therein.

(b) This Interconnection Agreement shall not be construed to create any rights between Interconnection Customer and Transmission Provider for any purpose other than providing Interconnection Service for the facilities described herein. Specifically, this Interconnection Agreement does not provide Interconnection Customer with any transmission, ancillary or other services under the Tariff.

(c) This Interconnection Agreement shall apply to interconnections of load and distribution systems, including, as applicable, generation resources (i) used to serve load which are interconnected to Interconnection Customer's distribution facilities and (ii) located on Interconnection Customer's side of the Point of Interconnection to the Transmission Provider's Transmission System. This Interconnection Agreement shall not apply to interconnections which materially support the transmission of electricity across Transmission Provider's Transmission System. The determination of whether this Interconnection Agreement applies to an interconnection request shall be made by Transmission Provider, in its sole reasonable discretion, on a comparable and non-discriminatory basis in accordance with Good Utility Practice.

(d) Except to the extent precluded by an Emergency, Force Majeure, Forced Outage or compliance with Applicable Law (including for the avoidance of doubt those necessary to comply with Reliability Standards), Transmission Provider shall reasonably consult with Interconnection Customer, and as appropriate negotiate an amendment to this Agreement, whenever (i) Transmission Provider requires Interconnection Customer to add, modify or improve its facilities that are the subject of this Interconnection Agreement; or (ii) Transmission Provider requires Interconnection Customer to change its operation standards or practices, or operation of facilities that are the subject of this Interconnection Agreement, including curtailment

procedures or practices. The requirements set forth in (i) and (ii) in the preceding sentence shall be applied on a comparable, just and reasonable and non-discriminatory basis in accordance with Good Utility Practice, as applicable, and Attachment U-1, as applicable.

(e) Any costs allocated to Interconnection Customer by Transmission Provider under this Agreement shall be in accordance with Attachment U-1 of the Tariff.

Section 1.04 Definitions

"Affiliate" shall have the meaning set forth in Section 1.1 of the Tariff.

"Applicable Law" shall mean all duly promulgated applicable federal, state and local laws, regulations, rules, ordinances, codes, decrees, judgments, directives, or judicial or administrative orders, permits and other duly authorized actions of any Governmental Authority having jurisdiction over a Party or the Parties, as applicable, their respective facilities and/or the respective services they provide.

"Attachment U-1" shall mean the Attachment to the Tariff known as the "Cost Allocation Procedures for Load Interconnections" or "Cost Allocation Procedures" which provides the interconnection request procedures and cost allocation methodology and standards applicable to this Interconnection Agreement.

"Balancing Area" shall mean an electric power system or combination of electric power systems bounded by interconnection metering and telemetering to which a common generation control scheme is applied in order to: (a) match the power output of generation resources within the electric power system(s) and energy delivered from or to entities outside the electric power system(s), with the load within the electric power system(s); (b) maintain scheduled interchange with other Balancing Areas, within the limits of Good Utility Practice; and (c) maintain the frequency of the electric power system(s) within reasonable limits in accordance with Good Utility Practice and the criteria of the NERC and the MRO.

"Balancing Area Operator" shall mean the entity with responsibility for operating and controlling generation and loads affecting Transmission Provider's transmission system. The Balancing Area Operator for the NSP System is the Midwest ISO, or its successor.

"Current Transformer" or "CT" shall mean a current transformer intended for metering, protective, or control purposes and designed to have its primary winding connected in series with a circuit carrying the current to be measured or controlled. A current transformer normally reduces current magnitudes to levels which can be handled by control, protection, and metering equipment.

"Effective Date" shall have the meaning set forth in Section 3.01.

"Emergency" shall mean a condition or situation that in the reasonable good faith determination of the affected Party based on Good Utility Practice contributes to an existing or imminent physical threat of danger to life or a significant threat to health, property or the environment.

"FERC" or "Commission" shall mean the Federal Energy Regulatory Commission or its successor.

"Financing Party" shall have the meaning set forth in Section 15.01(c).

"Force Majeure" shall have the meaning set forth in Section 10.1 of the Tariff.

"Forced Outage" shall mean in the case of Interconnection Customer's distribution system, taking the distribution system, in whole or in part, out of service by reason of an Emergency or Network Security condition, unanticipated failure or other cause beyond the reasonable control of Interconnection Customer, when such removal from service was not scheduled in accordance with Section 5.02; and, in the case of Transmission Provider taking its transmission system, in whole or in part, out of service by reason of an Emergency or Network Security Condition, unanticipated failure, or other cause beyond the reasonable control of NSP when such removal from service was not scheduled in accordance with Section 5.02.

"Good Utility Practice" shall have the meaning set forth in Article 1 of the Tariff.

"Governmental Authority" shall mean any federal, state, local or other governmental regulatory or administrative agency, court, commission, department, board, or other governmental subdivision, legislature, rulemaking board, tribunal, or other governmental authority having jurisdiction over the Parties, their respective facilities, or the respective services that they provide, and exercising or entitled to exercise any administrative, executive, police, or taxing authority or power; provided, however, that such term does not include Interconnection Customer, Transmission Provider or any Affiliate thereof.

"Indemnified Party" shall have the meaning set forth in Section 14.02.

"Indemnifying Party" shall have the meaning set forth in Section 14.02.

"Initial Period" shall have the meaning set forth in Section 3.01.

"Interconnection Customer Interconnection Facilities" shall mean the equipment owned by Interconnection Customer for purposes of interconnecting to the Transmission Provider Interconnection Facilities, including but not limited to the substation, circuits, circuit breakers, bus work, land easements, relays, communications circuits, and associated equipment and any replacement or additional equipment that Interconnection Customer may install due to equipment failure or to meet changed industry standards and all related instrument transformers, substation and physical structures, all transmission facilities required to access the Point of Interconnection, and Interconnection Customer's metering, relays, electric energy collection network, and generation control equipment. The Interconnection Customer Interconnection Facilities are identified and described in Appendix A.

"Interconnection Facilities" shall mean the Interconnection Customer Interconnection Facilities and Transmission Provider Interconnection Facilities, collectively, as described in Appendix A.

"Interconnection Guidelines" shall mean *Xcel Energy's Interconnection Guidelines For Transmission Interconnected Customer Loads*, as they may be revised from time to time by Transmission Provider and posted on Transmission Provider's website (www.xcelenergy.com), the provisions of which shall apply to the Parties as set forth in this Interconnection Agreement.

"Interconnection Service" shall mean the service Transmission Provider will provide to Interconnection Customer to interconnect the Interconnection Customer Interconnection Facilities to the Transmission Provider's electric system (such facilities being described more fully in Appendix A), and the ongoing operations and maintenance of such facilities.

"Local Balancing Area Operator" or "LBA" shall mean the entity with responsibility for operating and controlling local generation and loads affecting Transmission Provider's transmission system, subject to the authority of the Balancing Area Operator. The Local Balancing Area Operator is the NSP Control Center or its successor.

"Meter Data Management Agent" or "MDMA" shall mean the entity designated by the Interconnection Customer through the execution of any necessary agreements to do so that provides meter data to the Transmission Provider and/or to MISO (as "Transmission Provider" as that term is defined in the MISO Tariff), whichever is applicable.

"Metering Device(s)" shall mean all meters, current and potential transformers, RTU, and data processing equipment used to measure, record, or transmit data relating to the electric power and energy output from, or input to, the Interconnection Customer, as identified in Appendix A. The Metering Point shall be separately identified from the Point of Interconnection.

"MISO" or "Midwest ISO" shall mean the Midwest Independent Transmission System Operator, Inc. or its successor organization.

"MISO Tariff" shall mean MISO's Open Access Transmission, Energy and Operating Reserve Markets Tariff in effect from time to time, as accepted for filing by FERC.

"MRO" shall mean the Midwest Reliability Organization, Inc., or its successor organization.

"NERC" shall mean the North American Electric Reliability Corporation or its successor organization.

"Network Security" shall mean the ability of the NSP System to withstand sudden disturbances such as unforeseen conditions, electric short circuits or unanticipated loss of system elements.

"Network Upgrade" shall mean the additions, modifications, and upgrades to the NSP System at or beyond the Point of Interconnection.

"NSP Control Center," or "NSPCC," shall mean the NSP Transmission Control Center(s), as identified in Appendix B, responsible for operation of the NSP System, including the Transmission Provider Interconnection Facilities.

"Other Party Group" shall have the meaning set forth in Section 13.01(e).

"Planned Outage" shall mean action by (a) Interconnection Customer to take its equipment, facilities or systems out of service, partially or completely, to perform work on specific components that is scheduled in advance and has a predetermined start date and duration pursuant to the procedures set forth in Section 5.02, or (b) Transmission Provider to take its equipment, facilities and systems out of service, partially or completely, to perform work on specific components that is scheduled in advance and has a predetermined start date and duration pursuant to the procedures set forth in Section 5.02.

"Point of Interconnection" shall mean the physical point or points at which the Interconnection Customer Interconnection Facilities interconnect with the Transmission Provider Interconnection Facilities, as depicted in Appendix A.

"Reasonable Efforts" shall mean, with respect to an action required to be attempted or taken by a Party under the Interconnection Agreement, efforts that are timely and consistent with Good Utility Practice and are otherwise substantially equivalent to those a Party would use to protect its own interests.

"Reliability Standards" shall mean mandatory reliability standards adopted by NERC or MRO and approved by FERC, as amended from time to time, applicable to the facilities owned, and/or operated by Interconnection Customer and Transmission Provider, respectively.

"Remote Terminal Unit" or "RTU" shall mean a device installed at a substation or generation facility, and at the NSPCC, and is used to provide communication for remote control and indication of substation or generation facility equipment from the NSPCC.

"SCADA" shall have the meaning set forth in Section 4.09.

"State Regulatory Commission" shall mean the state regulatory agency with jurisdiction over (a) the retail electric rates and tariffs of NSPM or NSPW where the Point of Interconnection is located, and (b) determination of need or siting for new transmission facilities.

"System Protection Facilities" shall mean the equipment required to protect (a) the Transmission Provider's electric system, the systems of others directly or indirectly interconnected with the Transmission Provider's electric system, and the Transmission Provider's customers from faults occurring on the Interconnection Customer's side of the Point of Interconnection, and (b) Interconnection Customer from faults occurring on the Transmission Provider's electric system or on the systems of others to which the Transmission Provider's electric system is directly or indirectly interconnected.

"Tariff" or "OATT" shall mean the Xcel Energy Operating Companies Open Access Transmission Tariff on file with FERC, as amended from time to time.

"Term" shall mean the period of time during which this Interconnection Agreement shall remain in force and effect.

"TOA" or "Transmission Owners Agreement" shall mean the Agreement of Transmission Facilities Owner to Organize the Midwest Independent Transmission System Operator, Inc. accepted by FERC Order dated September 16, 1998, as amended from time to time and accepted for filing by FERC.

"Transmission Provider Interconnection Facilities" shall mean those facilities owned by the Transmission Provider necessary to establish a physical interconnection between Transmission Provider's existing electric system and the Interconnection Customer Interconnection Facilities at the Point of Interconnection, including but not limited to switches, circuits, circuit breakers, bus work, land easements, relays, communications circuits, and associated equipment, and any replacement or additional equipment that Transmission Provider may install due to equipment failure or to meet changed industry standards. The Transmission Provider Interconnection Facilities are identified and described in Appendix A. Transmission Provider Interconnection Facilities shall not include Network Upgrades.

"Voltage Transformer" or "VT" shall mean a transformer intended for metering, protective, or control purposes and designed to have its primary winding connected either between the primary conductors to be measured or between a conductor and ground. A voltage transformer normally reduces voltage magnitudes to levels which can be handled by control, protection, and metering equipment. The historic term for a VT is potential transformer.

ARTICLE II
SCOPE

Section 2.01 Scope of Interconnection Agreement

(a) General. Transmission Provider shall provide Interconnection Service to Interconnection Customer as provided herein. This Agreement supersedes any prior interconnection agreement(s) between the Parties through which the Interconnection Customer's Interconnection Facilities were interconnected to Transmission Provider's electrical system. However, unless listed, any other agreements or schedules under which services are or may be provided shall remain in force. Specifically, this Interconnection Agreement supersedes the following agreement(s) as of the Effective Date: [**insert agreement name(s), as applicable**].

(b) Limited Scope of Interconnection Agreement. This Interconnection Agreement sets forth the terms and conditions of Interconnection Service provided by Transmission Provider to Interconnection Customer. Although the Transmission Provider intends this Interconnection Agreement to be a service agreement under the Tariff, the establishment of Interconnection Service under this Interconnection Agreement does not in itself entitle Interconnection Customer to receive any services under the Tariff other than the Interconnection Service, as provided for herein. Any other services that Interconnection Customer may require, such as transmission service, must be separately arranged under the Tariff or MISO Tariff in accordance with the terms and conditions of such tariff, and paid for by Interconnection Customer or other user of such services.

(c) Other Arrangements. Interconnection Customer is responsible for making arrangements for the power supply of its load requirements and delivery of capacity and energy to its system. The establishment of an interconnection under this Interconnection Agreement does not in itself entitle Interconnection Customer to obtain any services from the Transmission Provider that may be subject to the jurisdiction of FERC, or the State Regulatory Commission; Interconnection Customer must arrange for any such services in accordance with the applicable provider's tariff or service requirements.

Section 2.02 Facilities Served. The scope of the Interconnection Service provided hereunder is based on Interconnection Customer's description of its facilities (including the Interconnection Customer Interconnection Facilities), and Transmission Provider's description of its facilities (including the Transmission Provider Interconnection Facilities), as set forth in Appendix A.

ARTICLE III
TERMS AND TERMINATION

Section 3.01 Term. This Interconnection Agreement shall become effective on the first day of the first month after being executed by the Parties, unless the Parties shall provide otherwise, or if filed unexecuted, upon the date specified by FERC ("Effective Date"). Unless terminated earlier in accordance with Section 3.02 below, this Interconnection Agreement shall remain in effect for an initial period of ten (10) years from the Effective Date ("Initial Period"), and from year to year thereafter, but shall be subject to termination by either Party at the end of the Initial Period or on any anniversary date thereof by such Party giving written notice of its intention to terminate not less than twelve (12) months prior to the end of the Initial Period and/or anniversary date.

In the event either Party provides notice of termination of this Interconnection Agreement under this Section 3.01, and Interconnection Customer still requires interconnection service to serve loads on its distribution system, the Parties shall use commercially Reasonable Efforts to negotiate a replacement interconnection agreement. If Interconnection Customer no longer requires interconnection service, upon termination of this Interconnection Agreement, Transmission Provider may, at its sole discretion and at Interconnection Customer's expense, permanently disconnect or remove the Transmission Provider Interconnection Facilities, provided such expense is just and reasonable and not unduly discriminatory.

Section 3.02 Early Termination. Notwithstanding the term specified in Section 3.01, this Interconnection Agreement may be terminated early in the following circumstances: (a) by mutual agreement among the Parties; or (b) by either Party in the event of any material breach of this Interconnection Agreement by the other Party, provided, such termination shall be subject to FERC approval as set forth in Section 15.03 of this Interconnection Agreement.

The Parties shall use commercially Reasonable Efforts to mitigate the costs, damages and charges arising out of an early termination under this Section 3.02. In the event of a Dispute regarding the early termination fee, either Party may request dispute resolution pursuant to the procedures in Article XVI.

Section 3.03 Survival. Certain provisions of this Interconnection Agreement shall continue in effect after termination of this Interconnection Agreement to give full effect to its terms. Such provisions include, but are not necessarily limited to, those relating to early termination, Interconnection Customer's payment for installation, operation, and maintenance of the Interconnection Customer's Interconnection Facilities, and, as applicable, to provide for disconnection of the Interconnection Customer's Interconnection Facilities from Transmission Provider's electric system, final billings and adjustments related to the period prior to termination, a Party's right to terminate, indemnification, and payment of any money due and owing to either Party pursuant to this Interconnection Agreement.

ARTICLE IV
OWNERSHIP, CONSTRUCTION, OPERATION AND MAINTENANCE

Section 4.01 Summary Description. Appendix A, which is attached hereto and made a part hereof, provides a description of Interconnection Customer's electrical facilities and distribution system, including the Interconnection Customer Interconnection Facilities, Transmission Provider's electrical facilities and transmission system, including the Transmission Provider Interconnection Facilities, and the Point of Interconnection.

Section 4.02 Interconnection Customer Interconnection Facilities and System Protection Facilities. Interconnection Customer shall at Interconnection Customer's sole expense design, construct, operate, maintain and own in accordance with applicable laws, rules and regulations, the Tariff, and Good Utility Practice, the Interconnection Customer Interconnection Facilities as described in Appendix A. Further Interconnection Customer shall operate the Interconnection Customer Interconnection Facilities in a manner that protects the Transmission Provider's electric system and the Transmission Provider Interconnection Facilities from transients, faults, and other operating contingencies occurring at or caused by the Interconnection Customer.

Design and specification of System Protection Facilities including, protective relaying, alarming, fault recording, control, dVAR controller, metering, and related systems for substations, high voltage switch gear and transformers shall be subject to the Transmission Provider's review and approval, which approval shall not be unreasonably withheld or delayed. All System Protection Facilities must be in compliance with applicable laws, rules and regulations, Good Utility Practice and the requirements set forth in this Interconnection Agreement.

Interconnection Customer may be required to install, operate and maintain facilities and equipment required for Transmission Provider to comply with applicable frequency-based, voltage-based and manual load shedding obligations established by Reliability Standards or the Balancing Area Operator. Transmission Provider shall require Interconnection Customer to install such facilities or equipment only to the extent it imposes comparable obligations on Transmission Provider's native load customers.

Section 4.03 Transmission Provider's Interconnection Facilities. Transmission Provider shall design, construct, operate, maintain, and own in accordance with applicable laws, rules and regulations, the Tariff, Good Utility Practice and the Interconnection Guidelines, the Transmission Provider Interconnection Facilities shown on Appendix A, and shall operate such facilities in a manner that protects the Interconnection Customer's electric system, including the Interconnection Customer Interconnection Facilities, from transients, faults, and other operating contingencies. The costs associated with Transmission Provider's Interconnection Facilities required to provide service to Interconnection Customer may be allocated to Interconnection Customer in accordance with Attachment U-1 to the Tariff.

Transmission Provider represents that to the best of its knowledge, the Interconnection Facilities, as of the Effective Date and described in Appendix A, are sufficient to permit interconnection of the Interconnection Customer Interconnection Facilities with the Transmission Provider Interconnection Facilities without additional equipment and in accordance with applicable Tariff interconnection requirements. Further Transmission Provider will support the design and adequacy of the Interconnection Facilities as described in Appendix A before any regulatory body having approval authority over the Interconnection Facilities.

Section 4.04 Network Upgrades. Transmission Provider shall plan, design, procure, construct, own, operate and maintain any Network Upgrades determined to be needed by Transmission Provider in accordance with Good Utility Practice, the Tariff and this Interconnection Agreement. The costs associated with Network Upgrades required to provide service to Interconnection Customer may be allocated to Interconnection Customer in accordance with Attachment U-1 to the Tariff.

Section 4.05 Modifications to Interconnection Facilities.

(a) Either Party may undertake modifications to its respective Interconnection Facilities which shall be designed, constructed and operated in accordance with this Interconnection Agreement and Good Utility Practice; provided however, if (1) Interconnection Customer proposes (i) to make any change or modification to the configuration or operation of the Interconnection Customer Interconnection Facilities which may impact Transmission Provider's Transmission System, including the Transmission Provider Interconnection Facilities, (ii) to add a new Point of Interconnection, or (iii) to eliminate a Point of Interconnection (except when this Interconnection Agreement is terminated); or (2) Transmission Provider proposes to make any change or modification to the configuration or operation of the Transmission Provider

Interconnection Facilities which may impact the Interconnection Customer Interconnection Facilities, (i) the Party proposing the change shall provide sufficient notice and information regarding such modification so that the other Party may evaluate the potential impact of such modification prior to the commencement of any work, and (ii) the Parties shall negotiate, in good faith, an amendment to this Interconnection Agreement as may be necessary to address the proposed change.

(1) Information provided under Section 4.05(a) may be designated by a Party to be Confidential Information hereunder, including, but not be limited to, information concerning the timing of such modification and how such modifications are expected to impact the other Party's system. Unless a shorter period of time is appropriate for a Party to respond to an Emergency, or comply with Reliability Standards or Applicable Law, the Party desiring to perform such work shall provide the relevant drawings, plans and specifications to the other Party at least ninety (90) days in advance of the commencement of the work or such shorter period upon which the Parties may agree, which agreement shall not unreasonably be withheld, conditioned or delayed.

(2) In the event the Parties are unable to agree to appropriate amendments or modifications to this Interconnection Agreement pursuant to Section 4.05(a), the Transmission Provider will unilaterally file, on a timely basis, with FERC an amendment to this Interconnection Agreement.

(3) The Parties' agreement to add a new Point of Interconnection shall be documented pursuant to Appendix C and Appendix E. The Parties' agreement to modify or remove a Point of Interconnection shall be documented pursuant to Appendix D and Appendix E; provided however, such documentation for removal of a Point of Interconnection is not necessary when this Interconnection Agreement is terminated pursuant to Section 3.02 or Article XV.

(b) To the extent Interconnection Customer is the Party modifying its interconnection facilities, Interconnection Customer shall be responsible for the costs of any additions, modifications or replacements that may be necessary to maintain or upgrade Interconnection Customer Interconnection Facilities consistent with applicable laws, rules and regulations, the Tariff, Good Utility Practice, and the Interconnection Guidelines. Interconnection Customer shall own any modifications to the Interconnection Customer Interconnection Facilities.

(c) In the event the Transmission Provider designs and constructs new or additional Transmission Provider Interconnection Facilities or upgrades, improvements or other modifications to existing Transmission Provider Interconnection Facilities that result in those facilities qualifying as Network Upgrades (such facilities shall be treated as Network Upgrades for purposes of cost assignment), then Interconnection Customer shall not be responsible for the cost of such facilities or modifications.

Section 4.06 Ownership of Transmission Provider Interconnection Facilities and Network Upgrades. As a general rule, Transmission Provider shall own, design, construct, operate and maintain the Transmission Provider Interconnection Facilities and Network Upgrades, including facilities that are the subject of Sections 4.03 through 4.07. The Parties acknowledge and agree that there may be circumstances where alternative ownership arrangements for such facilities (*e.g.*, ownership by the Interconnection Customer) may be warranted if mutually agreed and in accordance with Good Utility Practice, just and reasonable, and not unduly discriminatory or preferential. To determine the appropriateness of using an alternative ownership arrangement, the Parties may consider factors such as: (i) state and federal legal requirements, including applicable rights of first refusal; (ii) achieving the lowest reasonable cost; (iii) the effect of tax liabilities and payment of such liabilities; (iv) the relationship of the Transmission Provider Interconnection Facilities and/or Network Upgrades to other facilities owned by the Transmission Provider or Interconnection Customer; (v) the ability of the Transmission Provider or Interconnection Customer to own, operate and maintain the Transmission Provider Interconnection Facilities and/or Network Upgrades in accordance with Applicable Law and Reliability Standards; (vi) the purpose of the Transmission Provider Interconnection Facilities and/or Network Upgrades with consideration to who will benefit from such facilities; and (vii) whether the Party possesses adequate insurance to hold harmless the other Party and any third party from any claim, penalty, damage, liability or injury associated with such

facilities. Should the Parties disagree on entering into an alternative ownership arrangement, and/or the terms and conditions of the alternative ownership arrangement, either Party shall have the right to unilaterally make applications to FERC under the Federal Power Act to seek resolution of such disagreement.

Alternative ownership and other arrangements may be provided for in the Interconnection Agreement or Appendix C or Appendix D supplemental agreement. Nothing herein shall waive Parties' rights or entitlements under Applicable Law.

Section 4.07 Construction The Parties agree construction-related activities shall not commence until (1) the conditions set forth in Section 4.05 and/or Attachment U-1 have been satisfied, (2) all necessary federal, state, local and regulatory permits, permissions or approvals have been obtained, and (3) the Parties have agreed to a final construction schedule.

Section 4.08 Reliability Standards. Interconnection Customer shall be responsible for compliance with all Reliability Standards applicable to Interconnection Customer's electrical system; and Transmission Provider shall be responsible for compliance with all Reliability Standards applicable to its transmission system. Each Party shall be responsible for the costs of compliance with such Reliability Standards for their respective facilities and systems, including (a) costs associated with modifying their respective facilities or systems to comply with changes in such Reliability Standards; and (b) any financial penalties for non-compliance. The Parties agree to share data or documentation as may be required to demonstrate compliance with Reliability Standards where an individual Party has possession of data or documentation necessary for the other Party to demonstrate compliance.

Section 4.09 Interconnection Guidelines. The Interconnection Guidelines provide additional and more detailed standards for designing, testing, studying, constructing, operating, maintaining and interconnecting at the Point of Interconnection. Transmission Provider shall develop or promulgate the Interconnection Guidelines, including any updates, changes or modifications thereto, in accordance with Good Utility Practice. The Interconnection Guidelines include, among other things, power factor requirements, supervisory control and data acquisition ("SCADA") equipment requirements, and metering requirements.

Interconnection Customer will comply with the Interconnection Guidelines, as appropriate, for (i) any new point(s) of interconnection requested by Interconnection Customer on or after the Effective Date; (ii) any existing point(s) of interconnection materially modified after the Effective Date; and (iii) if the MISO market registration is changed; provided, however, Interconnection Customer is not required to comply with the Interconnection Guidelines for any Point(s) of Interconnection established pursuant to a prior interconnection agreement among the Parties, where no material modification was needed to the Point of Interconnection as a result of entering into this Agreement. After consultation with Interconnection Customer pursuant to Section 1.03(d), Transmission Provider will determine if there has been a material modification and such determination shall be done so in accordance with Good Utility Practice, and on a comparable, non-discriminatory basis Except when Interconnection Customer is excused from complying with the Interconnection Guidelines, failure by Transmission Provider or Interconnection Customer to fulfill its obligations under the Interconnection Guidelines may be a material breach of this Interconnection Agreement.

Should a conflict develop between the Interconnection Guidelines and FERC rules, the Tariff or applicable Reliability Standards, the Parties agree to abide by the FERC rules, Tariff or Reliability Standards until Transmission Provider modifies the Interconnection Guidelines to remove such conflict. The Parties shall use the Dispute Resolution procedures set forth in Article XVI to resolve any disagreements regarding the interpretation, application or implementation of the Interconnection Guidelines.

Section 4.10 Power Factor. Unless prevented by circumstances beyond Interconnection Customer's control, including Forced Outages, Interconnection Customer shall have sufficient power factor control equipment (such as capacitors) installed to maintain at minimum a 95-percent lagging or leading power factor at the Point of Interconnection for those loads greater than 1 MW. Interconnection Customer shall maintain the aforesaid requirement during peak load periods and avoid leading power factor during light load

conditions. Over time, it is the intention of the Parties that Interconnection Customer and Transmission Provider's load serving function will improve their respective power factor to a 98-percent lagging to leading power factor for those aggregated loads greater than 5 MWs. The power factor will be determined based on the MWh and MVARh flows during the monthly peak hour interval measured at each point of metering as follows: Power Factor = MWh/sqrt(MWh^2 + MVARh^2). With mutual agreement, reactive power support may be considered at an adjacent point of interconnection provided the substation is in electrically close proximity, in which case, the MWh and MVARh flows for each transformer may be combined for the purposes of compliance with this Section 4.10.

In the event Interconnection Customer has an aggregated load of over 1 MW but does not have sufficient power factor control equipment (such as capacitors) installed, to maintain at a minimum a 95-percent lagging or leading power factor at the Point of Interconnection, Interconnection Customer within thirty (30) days after written notice from Transmission Provider of such deficiency shall correct the deficiency or provide Transmission Provider with a written commitment to correct the deficiency. In the event Interconnection Customer makes a written commitment to add power factor control equipment (such as capacitors), Interconnection Customer shall exert commercially reasonable efforts to expeditiously bring such equipment into service and to complete installation within one (1) year from the initial notice or within such other time established by mutual agreement between the Parties. If the additional capacitors are not installed within the allowed time and Transmission Provider installs or has installed power factor control equipment on the Transmission System, Transmission Provider may bill Interconnection Customer a facilities fee based upon Transmission Provider's capital installation cost of an equivalent amount of power factor control equipment.

Section 4.11 Meter Data Management. Interconnection Customer shall have the right to select any entity, including itself, to be the MDMA that provides meter data to MISO; provided, however, that such entity has the necessary and appropriate qualifications to be an MDMA and provide meter data to MISO. Should the Parties mutually agree that Transmission Provider shall serve as the MDMA for Interconnection Customer, the rate for MDMA services shall be as set forth in the Tariff.

Section 4.12 Access. Appropriate representatives of each Party shall at all reasonable times; including weekends and nights, and with three (3) business days prior notice, have access to the other Party's facilities, to take readings and to perform all inspections, maintenance, service, and operational reviews as may be appropriate or necessary to facilitate the performance of this Interconnection Agreement. While on the other Party's premises, each Party's representatives shall announce their presence and observe such safety precautions as may be required and shall conduct themselves in a manner that will not interfere with the other Party's operations.

Section 4.13 Right of Installation. Each Party will make available suitable space for installation by the other Party of necessary equipment, apparatus and devices required for the performance of this Interconnection Agreement.

Section 4.14 Right of Removal. Any and all equipment, apparatus and devices caused to be placed or installed by one Party on, or in, the premises of the other Party shall be and remain the property of the Party owning such equipment, apparatus and devices regardless of the mode or manner of annexation or attachment to the premises. All foundations for all equipment shall be removed completely from the premises or to a lesser degree if an agreement for the lesser degree is reached between the Parties at the time. Notwithstanding the forgoing, in lieu of removal, the Parties reserve the right to sell any and all equipment, apparatus and devices that are attached to the premises. Once the aforesaid equipment is removed, the Parties will update Appendix A to reflect the removal.

Section 4.15 Transfer of Control or Sale of Facilities. In any sale or transfer of control of the Interconnection Customer's Interconnection Facilities, Interconnection Customer shall as a condition of such sale or transfer require the acquiring party or transferee with respect to the transferred facilities either to assume the obligations of Interconnection Customer with respect to this Interconnection Agreement or to enter into an agreement with Transmission Provider imposing on the acquiring party or transferee the same obligations applicable to Interconnection Customer pursuant to this Section 4.15.

ARTICLE V
OUTAGES AND COORDINATION

Section 5.01 Disconnection.

(a) Except when there is an Emergency, Forced Outage, Force Majeure and/or to comply with Applicable Law, including Reliability Standards, the Parties shall reasonably consult each other prior to disconnecting facilities.

(b) If at any time, the Transmission Provider observes any protective equipment which appears to have been changed other than pursuant to Section 4.05 and/or Attachment U-1, or failed, Transmission Provider shall have the right, if Transmission Provider determines that such change may have a material adverse impact on the safety or reliability of Transmission Provider's electric system consistent with Good Utility Practice, to disconnect Interconnection Customer's electric system from Transmission Provider's electric system, provided Transmission Provider first provides commercially reasonable notice to Interconnection Customer. Transmission Provider may require, at Interconnection Customer's expense (subject to Attachment U-1), a new calibration and activation test of Interconnection Customer's protective equipment after such equipment has been corrected or repaired.

Section 5.02 Outages. In accordance with Good Utility Practice, each Party may, in close cooperation with the other, remove from service its system elements that may impact the other Party's system as necessary to perform maintenance or testing or to replace installed equipment. Absent the existence of an Emergency, the Party scheduling a removal of a system element from service will use good faith efforts to schedule such removal on a date mutually acceptable to both Parties, in accordance with Good Utility Practice.

In the event of a Forced Outage of a system element of the Interconnection Customer's electric system adversely affecting the Transmission Provider's facilities or electric system, Interconnection Customer will use Good Utility Practice to promptly restore that system element to service. In the event of a Forced Outage of a system element of the Transmission Provider's electric system adversely affecting the Interconnection Customer's facilities or electric system, the Transmission Provider will use Good Utility Practice to promptly restore that system element to service.

In the event of a Planned Outage of a system element of Interconnection Customer's electric system adversely affecting Transmission Provider's facilities or electric system, Interconnection Customer will act in accordance with Good Utility Practice to promptly restore that system element to service in accordance with its schedule for the work that necessitated the planned outage. In the event of a Planned Outage of a system element of the Transmission Provider's electric system adversely affecting Interconnection Customer's facilities or electric system, Transmission Provider will act in accordance with Good Utility Practice to promptly restore that system element to service in accordance with its schedule for the work that necessitated the planned outage.

Section 5.03 Outage Reporting. The Parties shall comply with all current Transmission Provider, and MISO reporting requirements, as they may be revised from time to time, and as they apply to the Interconnection Customer or Transmission Provider. When a Forced Outage occurs that affects the Interconnection Customer Interconnection Facilities or impacts Interconnection Customer's electrical system such that there is an adverse impact to the Point of Interconnection, Interconnection Customer shall notify the NSP Control Center of the existence, nature, and expected duration of the Forced Outage as soon as practical, but in no event later than one (1) hour after the Forced Outage occurs. Interconnection Customer shall immediately inform the NSP Control Center of changes in the expected duration of the Forced Outage unless relieved of this obligation by the NSP Control Center for the duration of each Forced Outage. When a Forced Outage occurs that affects the Transmission Provider Interconnection Facilities or impacts Transmission Provider's transmission system such that there is an adverse impact to the Point of

Interconnection, Transmission Provider shall notify Interconnection Customer of the existence, nature, and expected duration of the Forced Outage as soon as practical.

Section 5.04 Switching and Tagging Rules. The Parties shall abide by their respective switching and tagging rules for obtaining clearances for work or for switching operations on equipment. Transmission Provider shall notify Interconnection Customer of Transmission Provider's switching and tagging rules, and provide periodic updates of such rules as they may change from time to time. Interconnection Customer shall establish switching and tagging rules for Interconnection Customer Interconnection Facilities, and shall provide such rules to the Transmission Provider.

Section 5.05 Coordination. If a Party's interconnection facilities are subject to MISO's functional control, the Parties will coordinate with the applicable functional directives from MISO.

In all other circumstances:

(a) Electrical system operation shall be coordinated between Interconnection Customer and Transmission Provider, including the coordination of equipment outages, voltage levels, real and reactive power flow monitoring, and switching operations, which affect the Balancing Area or LBA, as required by the Tariff and this Interconnection Agreement.

(b) If either Interconnection Customer or Transmission Provider operations are causing a condition on the interconnected electrical network where line loadings, equipment loadings, voltage levels or reactive flow significantly deviate from normal operating limits or can be expected to exceed emergency limits following a contingency, and reliability of the bulk power supply is threatened, the LBA, or Transmission Provider shall take immediate steps and make Reasonable Efforts to relieve, correct or control the condition. These steps include notifying other affected electric utility systems and MISO, as applicable, adjusting generation, changing schedules between Balancing Areas, initiating load relief measures, and taking such other reasonable action as may be required. Electrical equipment is to be operated within its normal rating established by the owning Party except for temporary conditions after a contingency has occurred.

(c) If either Interconnection Customer or Transmission Provider changes the normal operation of its system at a Point of Interconnection, the Parties shall consider any resulting benefits or adverse impacts to the reliability or transfer capability of the interconnected network for purposes of determining any applicable adjustments to the Parties' respective system usage rights and responsibilities.

(d) The Parties shall cooperate to supply, as applicable, MISO required information, including but not limited to, calculation of available flowgate or transmission capacity determination and for security constrained economic dispatching purposes.

(e) Each Party shall notify the Other as soon as practicable whenever:

(1) Problems with a Point of Interconnection are detected that could result in mis-operation of interconnection protection or other interconnection equipment;

(2) The interconnection is opened by protective relay action;

(3) Interconnection equipment problems occur and result in an outage to a portion of Transmission Provider's electric system;

(4) A Party intends to initiate switching to close the interconnection; or,

(5) A Party intends to initiate switching to open the interconnection.

Section 5.06 Emergency. In the event of an Emergency, the Party becoming aware of the Emergency may, in accordance with Good Utility Practice and using its reasonable judgment, take such action as is reasonable and necessary to prevent, avoid, or mitigate injury, danger, and loss.

(a) In the event Interconnection Customer has identified an Emergency involving the Transmission Provider Interconnection Facilities, Interconnection Customer shall obtain the consent of Transmission Provider personnel prior to manually performing any switching operations unless immediate action is essential to protecting the safety of individuals or against extreme damage to property.

(b) Transmission Provider may, consistent with Good Utility Practice, take whatever actions or inactions the Transmission Provider deems necessary during an Emergency in order to: (1) preserve public health and safety; (2) preserve the reliability of the Transmission Provider's electric system, including the Transmission Provider Interconnection Facilities; (3) limit or prevent damage; and (4) expedite restoration of service. Transmission Provider shall use Reasonable Efforts to minimize the effect of such actions or inactions on the Interconnection Customer Interconnection Facilities.

(c) Interconnection Customer may, consistent with Good Utility Practice, take whatever actions or inactions with regard to the Interconnection Customer Interconnection Facilities Interconnection Customer deems necessary during an Emergency in order to: (1) preserve public health and safety; (2) preserve the reliability of the Interconnection Customer Interconnection Facilities; (3) limit or prevent damage; and (4) expedite restoration of service. Interconnection Customer shall use Reasonable Efforts to minimize the effect of such actions or inactions on Transmission Provider's electric system.

(d) Transmission Provider shall provide Interconnection Customer with prompt oral or electronic notification under the circumstances of an Emergency that may reasonably be expected to affect Interconnection Customer's operations, to the extent the Transmission Provider is aware of the Emergency. Interconnection Customer shall provide the Transmission Provider with prompt oral or electronic notification under the circumstances of an Emergency which may reasonably be expected to affect the Transmission Provider's electric system, to the extent Interconnection Customer is aware of the Emergency. To the extent the Party becoming aware of an Emergency is aware of the facts of the Emergency, such oral or electronic notification shall describe the Emergency, the extent of the damage or deficiency, its anticipated duration, and the corrective action taken and/or to be taken.

(e) To the extent a system Emergency exists on Transmission Provider transmission system, and Transmission Provider, Balancing Area Operator, or Reliability Coordinator determines it is necessary for the Transmission Provider and Interconnection Customer to shed load, the Parties shall shed load in accordance with the Tariff.

ARTICLE VI
SAFETY

Section 6.01 Safety Standards. The Parties agree that all work performed under this Interconnection Agreement shall be performed in accordance with all applicable laws, regulations, rules, standards, practices and procedures pertaining to the safety of persons or property. To the extent a Party performs work on the other Party's premises, the Party performing work shall also abide by the safety, or other access rules applicable to those premises.

Each Party shall be solely responsible for the safety and supervision of its own employees, agents, representatives, and contractors.

ARTICLE VII
ENVIRONMENTAL CONSIDERATIONS

Section 7.01 Environmental Considerations. Each Party will remain responsible for compliance with any and all environmental laws applicable to its own respective property, facilities, and operations. Each Party shall promptly notify the other Party upon discovering any release of any hazardous substance by it on the property or facilities of the other Party, or which may migrate to, or adversely impact the property, facilities or operations of, the other Party and shall promptly furnish to the other Party copies of any reports filed with any governmental agencies addressing such events.

The Party responsible for the release of any hazardous substance on the property or facilities of the other Party, or which may migrate to, or adversely impact the property, facilities or operations of, the other Party shall be responsible for the reasonable cost of performing any and all remediation or abatement activity and submitting all reports or filings required by environmental laws. Advance written notification (except in emergency situations, in which verbal, followed by written notification, shall be provided as soon as practicable) shall be provided by any Party performing any remediation or abatement activity on the property or facilities of the other Party, or which may adversely impact the property, facilities, or operations of, the other Party. Except in an Emergency, such remediation or abatement activity shall be performed only with the consent of the Party owning the affected property or facilities. The Parties agree to coordinate, to the extent necessary, the preparation of site plans, reports or filings required by law or regulation.

ARTICLE VIII
FORCE MAJEURE

Section 8.01 Effect of Declaring Force Majeure. Except for the obligation to make any payments under this Interconnection Agreement, neither Party shall be considered to be in default or breach of this Interconnection Agreement or liable in damages or otherwise responsible to the other Party for any delay in or failure to carry out any of its obligations under this Interconnection Agreement if, and only to the extent that, the Party is unable to perform or is prevented from performing by an event of Force Majeure. Notwithstanding the foregoing sentence, neither Party may claim Force Majeure for any delay or failure to perform or carry out any provision of this Interconnection Agreement to the extent that such Party has been negligent or engaged in intentional misconduct and such negligence or intentional misconduct substantially and directly caused that Party's delay or failure to perform or carry out its duties and obligations under this Interconnection Agreement.

Section 8.02 Procedures for Declaring Force Majeure. A Party claiming Force Majeure must:

(a) Give written notice to the other Party of the occurrence of a Force Majeure as soon as practicable;

(b) Use Reasonable Efforts to resume performance or the provision of service hereunder as soon as practicable;

(c) Take all commercially reasonable actions to correct or cure the Force Majeure;

(d) Exercise all Reasonable Efforts to mitigate or limit damages to the other Party; except that neither party shall be required to settle any strike, walkout, lockout or other labor dispute on terms which, in the sole judgment of the Party involved in the dispute, are contrary to its interest; and

(e) Provide written notice to the non-declaring Party, as soon as practicable, of the cessation of the adverse effect of the Force Majeure on its ability to perform its obligations under this Interconnection Agreement.

ARTICLE IX
BILLING AND PAYMENT

Section 9.01 Billing Procedure. Transmission Provider shall bill Interconnection Customer for the actual costs incurred under this Interconnection Agreement consistent with the procedures set forth in Article 7 of the Tariff. Payment of an invoice shall not relieve the paying Party from any responsibilities or obligations it has under this Interconnection Agreement, nor shall such payment constitute a waiver of any claims arising hereunder.

Section 9.02 Interest on Unpaid Balances. Interest on any unpaid amounts that are past due (including amounts placed in escrow) shall be calculated in accordance with Article 7 of the Tariff.

Section 9.03 Billing Disputes. If all or part of any bill is disputed by a Party, that Party shall promptly pay the amount that is not disputed, provide the other Party a reasonably detailed written explanation of the basis for the dispute, and request the commencement of dispute resolution pursuant to Article XVI of this Interconnection Agreement. When the amount in dispute is equal to or greater than one million dollars ($1,000,000), the disputed amount shall be paid into an independent escrow account pending resolution of the dispute, at which time the prevailing Party shall be entitled to receive the disputed amount, as finally determined to be payable, along with interest accrued at the Interest Rate through the date on which payment is made, within ten (10) business days of such resolution. If the amount in dispute is less than one million dollars ($1,000,000), the disputing Party may withhold the disputed amount or pay the disputed amount into an independent escrow account pending resolution of the dispute, at which time the prevailing Party shall be entitled to receive the disputed amount, as finally determined to be payable, along with interest accrued at the Interest Rate through the date on which payment is made, within ten (10) business days of such resolution. The Parties may elect, but are not required, to agree to Alternative Dispute Resolution, including arbitration. Neither Party shall be responsible for the other Party's cost of collecting amounts due under this Interconnection Agreement, including attorney's fees.

ARTICLE X
NOTICES

Section 10.01 Notices. Any notice, demand, request, or communication required or authorized by this Interconnection Agreement shall be hand delivered or mailed by certified mail, return receipt requested, with postage prepaid, to Parties as set forth in Appendix B. In addition to the obligations set forth in the preceding sentence, a Party providing notice, demand, request or communication pursuant to this Section may also provide a courtesy copy of such notice, demand, request, or communication via electronic mail, or email. Any Party may update that portion of Appendix B that pertains to such Party's address by giving written notice to the other Parties of such change at any time.

ARTICLE XI
REGULATION AND MODIFICATION OF RATES

Section 11.01 Regulation. This Interconnection Agreement is subject to the jurisdiction of the FERC.

Section 11.02 Modification. Transmission Provider reserves its rights under Section 205 of the Federal Power Act to unilaterally make applications to FERC for modification of the rates, terms, conditions, classification of service, rule, or regulation for any service the Transmission Provider provides under this Interconnection Agreement and the attachments hereto over which FERC has jurisdiction. Interconnection

Customer reserves its rights under Section 206 of the Federal Power Act to unilaterally make application to FERC for modification of the rates, terms, conditions, classification of service, rule, or regulation for any service provided under this Interconnection Agreement and the attachments hereto over which FERC has jurisdiction.

ARTICLE XII
ASSIGNMENT

Section 12.01 Successors and Assigns. This Interconnection Agreement shall be binding upon the respective Parties, their successors and permitted assigns, on and after the Effective Date hereof.

Section 12.02 Assignment Restrictions. This Interconnection Agreement may be assigned by either Party only with the written consent of the other; provided, however, that either Party may assign this Interconnection Agreement without the consent of the other Party to any Affiliate of the assigning Party with an equal or greater credit rating and with the legal authority and operational ability to satisfy the obligations of the assigning Party under this Interconnection Agreement; and provided further that Interconnection Customer shall have the right to assign this Interconnection Agreement, without the consent of Transmission Provider, for collateral security purposes to aid in providing financing, provided that Interconnection Customer promptly notifies Transmission Provider of any such assignment. Any financing arrangement entered into by Interconnection Customer pursuant to this Article XII will provide that prior to or upon the exercise of the secured party's, trustee's or mortgagee's assignment rights pursuant to said arrangement, the secured creditor, the trustee or mortgagee will notify Transmission Provider of the date and particulars of any such exercise of assignment right(s). Any attempted assignment that violates this Article XII is void and ineffective. Any assignment under this Interconnection Agreement shall not relieve a Party of its obligations, nor shall a Party's obligations be enlarged, in whole or in part, by reason thereof. Where requested, consent to assignment will not be unreasonably withheld, conditioned or delayed.

ARTICLE XIII
INSURANCE

Section 13.01 Applicability. If Interconnection Customer is a municipality, city, county, town, public authority or other political subdivision that qualifies for statutory limitations on liability under Applicable Law, Interconnection Customer shall procure and maintain, at its own expense, insurance coverages in accordance with the requirements set forth in Appendix F. In all other circumstances, Interconnection Customer shall comply with the requirements set forth in Section 13.02.

Section 13.02 Insurance. Each Party shall, at its own expense, maintain in force until this Interconnection Agreement is terminated and until released by the other Party, the following insurance coverages, with insurers authorized to do business in the state where the Point of Interconnection is located:

(a) Employer's Liability and Workers' Compensation Insurance providing statutory benefits in accordance with the laws and regulations of the state in which the Point of Interconnection is located.

(b) Commercial General Liability Insurance including premises and operations, personal injury, broad form property damage, broad form blanket contractual liability coverage (including coverage for the contractual indemnification) products and completed operations coverage, coverage for explosion, collapse and underground hazards, independent contractors coverage, coverage for pollution to the extent normally available and punitive damages to the extent normally available and a cross liability endorsement, with minimum limits of one million dollars ($1,000,000) per occurrence/one million dollars ($1,000,000) aggregate combined single limit for personal injury, bodily injury, including death and property damage.

(c) Comprehensive Automobile Liability Insurance for coverage of owned and non-owned and hired vehicles, trailers or semi-trailers designed for travel on public roads, with a minimum, combined single limit of one million dollars ($1,000,000) per occurrence for bodily injury, including death, and property damage.

(d) Excess Public Liability Insurance over and above the Employers' Liability Commercial General Liability and Comprehensive Automobile Liability Insurance coverage, with a minimum combined single limit of ten million dollars ($10,000,000) per occurrence/ ten million dollars ($10,000,000) aggregate.

(e) The Commercial General Liability Insurance, Comprehensive Automobile Insurance and Excess Public Liability Insurance policies shall name the other Party, its parent, associated and Affiliate companies and their respective directors, officers, agents, servants and employees ("Other Party Group") as additional insured. All policies shall contain provisions whereby the insurers waive all rights of subrogation in accordance with the provisions of this Interconnection Agreement against the Other Party Group and provide thirty (30) calendar days advance written notice to the Other Party Group prior to the anniversary date of cancellation or any material change in coverage or condition.

(f) The Commercial General Liability Insurance, Comprehensive Automobile Liability Insurance and Excess Public Liability Insurance policies shall contain provisions that specify that the policies shall apply to such extent without consideration for other policies separately carried. Each Party shall be responsible for its respective deductibles or retentions.

(g) The Commercial General Liability Insurance, Comprehensive Automobile Liability Insurance and Excess Public Liability Insurance policies, if written on a Claims First Made Basis, shall be maintained in full force and effect for two (2) years after termination of this Interconnection Agreement, which coverage may be in the form of tail coverage or extended reporting period coverage if agreed by the Parties.

(h) The requirements contained herein as to the types and limits of all insurance to be maintained by the Parties are not intended to and shall not in any manner, limit or qualify the liabilities and obligations assumed by the Parties under this Interconnection Agreement.

(i) Within ten (10) days following execution of this Interconnection Agreement, and as soon as practicable after the end of each fiscal year or at the renewal of the insurance policy and in any event within ninety (90) days thereafter, each Party shall provide certification of all insurance required in this Interconnection Agreement, executed by each insurer or by an authorized representative of each insurer.

(j) Notwithstanding the foregoing, each Party may self-insure to meet the minimum insurance requirements of subsections (a)-(h) of this Section 13.01 to the extent the Party maintains a self-insurance program; provided that, such Party's senior secured debt is rated at investment grade or better by Standard & Poor's and that its self-insurance program meets the minimum insurance requirements set forth in subsections (a)-(h) of this Section 13.01. For any period of time that a Party's senior secured debt is unrated by Standard and Poor's, such Party shall comply with the insurance requirements set forth in subsections (a)–(i) of this Section 13.01. In the event that a Party is permitted to self-insure pursuant to this Article XIII, it shall notify the other Party that it meets the requirements to self-insure and that its self-insurance program meets the minimum insurance requirements in a manner consistent with that specified in this Section 13.01(j).

(k) The Parties agree to report to each other in writing as soon as practicable all accidents or occurrences resulting in injuries to any person, including death, and any property damage arising out of this Interconnection Agreement.

(l) In the event Interconnection Customer is a municipality or other governmental entity, Interconnection Customer will be subject to the insurance coverage obligations set forth in Appendix F in lieu of the insurance obligations set forth in this Section 13.02.

ARTICLE XIV
CONSEQUENTIAL DAMAGES, INDEMNITY AND RISK OF LOSS

Section 14.01 Waiver of Consequential Damages. In no event shall one Party, its governing board members, officers, employees or agents be liable to the other Party under this Interconnection Agreement from any cause howsoever arising in contract, tort or otherwise for any indirect, incidental, special, punitive,

exemplary, or consequential damages, including but not limited to, loss of use, loss of revenue, loss of profit, and/or cost of replacement power, interest charges, cost of capital, claims of its customers to which service is made; provided, however, that damages for which a Party may be liable to the other Party under another agreement will not be considered to be special, indirect, incidental, punitive, exemplary or consequential damages hereunder.

Section 14.02 Indemnity. Each Party shall at all times indemnify, defend and hold harmless the other Party, its shareholders, members, partners, Affiliates, employees, consultants, representatives, agents, successors and permitted assigns ("Indemnified Party") from any and all liability, damages, losses, claims, including claims and actions relating to injury to or death of any person or damage to property, demand, suits, recoveries, costs and expenses, court costs, attorney fees, and all other obligations by or to third parties, arising out of or resulting from the other Party's ("Indemnifying Party") negligence, or action or inactions of its obligations under this Interconnection Agreement, except in cases of negligence, gross negligence or intentional wrongdoing by the Indemnified Party. Nothing in this Section 14.02 shall relieve the Transmission Provider or Interconnection Customer of any liability to the other for any breach of this Interconnection Agreement.

(a) If an Indemnified Party is entitled to indemnification under this Section 14.02 as a result of a claim by a third party, and the Indemnifying Party fails, after notice and reasonable opportunity to proceed, to assume the defense of such claim, the Indemnified Party may at the expense of the Indemnifying Party contest, settle or consent to the entry of any judgment with respect to, or pay in full, such claim.

(b) If an Indemnifying Party is obligated to indemnify and hold any Indemnified Party harmless under this Section 14.02, the amount owing to the Indemnified Party shall be the amount of such Indemnified Party's loss net of any insurance or other recovery.

(c) Promptly after receipt by an Indemnified Party of any claim or notice of the commencement of any action or administrative or legal proceeding or investigation as to which the indemnity provided in this Section 14.02 may apply, the Indemnified Party shall notify the Indemnifying Party of such fact. Any failure of or delay in such notification shall not affect the Indemnifying Party's obligation to indemnify the Indemnified Party unless such failure or delay is materially prejudicial to the Indemnifying Party.

(d) In the event Indemnifying Party is a municipality or other governmental entity, Indemnifying Party will be subject to the indemnification obligations set forth in Appendix F in lieu of the indemnification obligations set forth in this Section 14.02.

Section 14.03 Risk of Loss. Except under situations of negligence, gross negligence, or intentional wrong-doing by the other Party, each Party shall have the full risk of loss for its own property and material, and each Party shall (subject to Article XIII) obtain and maintain insurance coverage accordingly under its own insurance and risk management procedures. To the extent permitted by each Party's insurer, at no additional cost to that Party, each Party shall require its property insurer to waive the right of subrogation. Each Party shall have title and risk of loss for those materials or capital equipment purchased for its ownership by the other Party as an authorized agent under this Interconnection Agreement confirmed by written confirmation and approval of supplier, specifications, equipment warranty, delivery and installation arrangements (the principal being entitled to any sales tax exemptions). All such equipment and materials will be inspected by the purchasing agent Party upon delivery and damaged or nonconforming equipment or materials will be rejected and returned to the seller upon consultation and agreement with the Party for whom the equipment was purchased.

ARTICLE XV
DEFAULT AND TERMINATION

Section 15.01 Default by Interconnection Customer.

(a) In the event the Interconnection Customer fails, for any reason other than a billing dispute as described in Section 9.03, to make payment to Transmission Provider on or before the due date as

described herein, and such failure of payment is not cured within thirty (30) calendar days after Transmission Provider notifies Interconnection Customer of such failure, a default by the Interconnection Customer shall be deemed to exist.

In the event of an uncured default by Interconnection Customer for nonpayment, except when nonpayment is the subject of a billing dispute as provided in Section 9.03, Transmission Provider may initiate a proceeding with the FERC to terminate service but shall not terminate service until the FERC so approves any such request. In the event of a billing dispute between Transmission Provider and Interconnection Customer, Transmission Provider will continue to provide service under this Interconnection Agreement as long as the Interconnection Customer (1) continues to make all payments not in dispute, and (2) subjection to Section 9.03, pays into an independent escrow account the portion of the invoice in dispute, pending resolution of such dispute. If Interconnection Customer fails to meet these two requirements for continuation of service, then Transmission Provider may provide notice to the Interconnection Customer of its intention to suspend service in accordance with the Tariff or FERC policy.

(b) Interconnection Customer shall also be in default if it materially breaches any other provision of this Interconnection Agreement, and fails to cure any such breach within thirty (30) days after written notice by Transmission Provider of the existence and nature of such alleged breach.

(c) If Interconnection Customer assigns its interests under this Interconnection Agreement to a bank, lender or other financial institution for purposes of obtaining financing ("Financing Party"), and Interconnection Customer notifies Transmission Provider of this assignment and the information necessary for Transmission Provider to contact Financing Party, then Transmission Provider shall also notify Financing Party of any breach or default by Interconnection Customer under this Interconnection Agreement at the same time as it notifies Interconnection Customer of such breach or default. If Financing Party elects to cure the breach or default, by payment or otherwise, then Transmission Provider agrees to accept such cure by Financing Party as if the same had been effected by Interconnection Customer.

Section 15.02 Default by Transmission Provider. Transmission Provider shall be considered in default if it fails to make any payment due to Interconnection Customer hereunder, or fails to cure any material breach, within thirty (30) days after written notice of nonpayment or material breach from Interconnection Customer.

Section 15.03 Termination for Default. Should a Party fail to cure a default within the applicable cure period, and the default is not contested pursuant to the dispute resolution process provided in Section 16.01 or other legal processes, the non-defaulting Party shall have the right to terminate this Interconnection Agreement subject to FERC approval and other defenses by giving written notice to the Party in default, and be relieved of any further obligation hereunder, and whether or not the non-defaulting Party terminates this Interconnection Agreement, to recover from the defaulting Party all amounts due hereunder, plus all other damages and remedies to which the non-defaulting Party is entitled subject to the limitations set forth in Article XIV of this Interconnection Agreement. The provisions of this Article XV shall survive termination of this Interconnection Agreement.

ARTICLE XVI
DISPUTE RESOLUTION

Section 16.01 Dispute Resolution Process. In the event the Parties are required by this Interconnection Agreement or mutually agree to try and resolve a dispute, the Parties shall first refer the dispute to designated senior representatives, with authority to bind their respective Party, for resolution on an informal basis as promptly as practicable. In the event the designated representatives are unable to resolve the dispute within thirty (30) days, or such other period as the Parties may mutually agree, such dispute may either be submitted to the alternative dispute resolution provisions set out in Article 12 of the Tariff, if agreed to by the Parties, or the aggrieved Party may initiate legal proceedings at the Commission or court of competent jurisdiction.

ARTICLE XVII
CONFIDENTIAL INFORMATION

Section 17.01 Furnishing of Information. It is recognized by the Parties that the successful operation of this Interconnection Agreement depends upon the cooperation by the Parties in the operation of their systems. As a part of such cooperation, subject to the limitations regarding disclosing confidential information provided in this Interconnection Agreement, each Party agrees that it will furnish to the other Party such data concerning its system as may be necessary to support the other Party's system reliability.

Section 17.02 Confidential Information.

(a) "Confidential Information" means (1) any confidential, proprietary or trade secret information of a plan, specification, pattern, procedure, design, device, drawing, list, concept, customer information, policy or compilation relating to the present or planned business of a Party, which is designated as Confidential Information by the Party supplying the information, whether conveyed orally, electronically, in writing, through inspection, or otherwise; or (2) any Critical Energy Infrastructure Information. Confidential Information which includes, without limitation, all information relating to a Party's technology, research and development, business affairs, and pricing, and any information supplied by a Party to another Party on a confidential basis prior to the execution of this Interconnection Agreement.

(b) Confidential Information shall not include information that the receiving Party can demonstrate: (1) is generally available to the public other than as a result of a disclosure by the receiving Party; (2) was in the lawful possession of the receiving Party on a non confidential basis before receiving it from the disclosing Party; (3) was supplied to the receiving Party without restriction by a third party, who, to the knowledge of the receiving Party, was under no obligation to the other Party to keep such information confidential; (4) was independently developed by the receiving Party without reference to Confidential Information of the disclosing Party; or (5) is, or becomes, publicly known, through no wrongful act or omission of the receiving Party or breach of this Interconnection Agreement.

Information designated as Confidential Information will no longer be deemed confidential if the Party that designated the information as Confidential Information notifies the other Parties that such information no longer is confidential.

(c) Information is Confidential Information only if it is clearly designated or marked in writing as confidential on the face of the document; or, if the information is conveyed orally or by inspection, the Party providing the information orally informs the receiving Party that the information is confidential. Each Party shall be responsible for clearly designating or marking information governed by FERC's Critical Energy Infrastructure Information rules and regulations.

Section 17.03 Protection of Confidential Information.

(a) No Party shall disclose any Confidential Information of the other Party obtained pursuant to or in connection with the performance of this Interconnection Agreement to any third party without the express written consent of the providing Party; provided, however, that any Party may produce Confidential Information in response to a subpoena, discovery request or other compulsory process issued by a judicial body or Governmental Authority upon reasonable notice to the providing Party that (a) a protective order from such jurisdictional judicial body or court has been issued relating to the Confidential Information; and (b) a binding nondisclosure agreement is in effect with a proposed recipient of any Critical Energy Infrastructure Information.

(b) The Parties shall use at least the same standard of care to protect Confidential Information they receive as they use to protect their own Confidential Information from unauthorized disclosure, publication or dissemination.

(c) Any Party may use Confidential Information solely: (1) to fulfill its obligations to the other Party, under this Interconnection Agreement; (2) to fulfill its regulatory requirements except to the extent that such information constitutes or has been designated Critical Energy Infrastructure Information; (3) in any proceeding or in any administrative agency or court of competent jurisdiction addressing any dispute arising under this Interconnection Agreement, subject either to a written confidentiality agreement with all Parties (including, if applicable, an arbitrator(s)) or to a protective order; or (4) as required by Applicable Law. As it pertains to (3) and (4), notwithstanding the absence of a protective order or waiver, a Party may disclose such Confidential Information which, in the opinion of its counsel, the Party is legally compelled to disclose. In the event that the receiving Party is legally requested or required (by oral questions, interrogatories, requests for information or documents, subpoena, civil investigative demand or similar process, or in the opinion of its counsel, by federal or state securities or other statutes, regulations or laws) to disclose any Confidential Information, the receiving Party shall, to the extent permitted under applicable law, promptly notify the disclosing Party of such request or requirement prior to disclosure, so that the disclosing Party may seek an appropriate protective order and/or waive compliance with the terms of this Interconnection Agreement and shall request confidential treatment of any such disclosure.

(d) The Parties agree that monetary damages by themselves may be inadequate to compensate a Party for the other Party's breach of its obligations under this Article. Each Party accordingly agrees that the other Parties are entitled to equitable relief, by way of injunction or otherwise, if it breaches or threatens to breach its obligations under this Article.

Section 17.04 Survival. The confidentiality obligations of this Article shall survive termination of this Interconnection Agreement for a period of two (2) years.

ARTICLE XVIII
MISCELLANEOUS

Section 18.01 Third Party Contracts. The Parties recognize that each has entered into and may in the future enter into contractual commitments with various third parties regarding benefits, use and operation of network transmission facilities it owns within the interconnected regional transmission network. Each Party hereby covenants that its respective contracts with third parties shall not interfere with its obligations to the other Party made under this Interconnection Agreement.

Section 18.02 No Residual Value. This Interconnection Agreement shall not be construed to provide any residual value to either Party or its successors or permitted assigns or any other party, for rights to, use of, or benefits from the other Party's system following expiration of this Interconnection Agreement.

Section 18.03 No Third Party Beneficiary. Unless otherwise specifically provided in this Interconnection Agreement, the Parties do not intend to create rights in or to grant remedies to any third Party as a beneficiary of this Interconnection Agreement or of any duty, covenant, obligation or undertaking established hereunder.

Section 18.04 Headings. Article headings and titles are included for the convenience of Parties and shall not be used to construe the meaning of any provision of this Interconnection Agreement.

Section 18.05 Governing Law. This Interconnection Agreement shall be interpreted and governed by the laws of the state in which the Point of Interconnection is located, or the laws of the United States of America, as applicable.

Section 18.06 Effect of MISO Membership. In the event, during the term hereof, Transmission Provider ceases to be a transmission owning member of a MISO or a successor, all terms and conditions with respect to MISO, or successor(s) herein shall remain in force until amended. Transmission Provider shall be responsible for filing with FERC any modifications to this Interconnection Agreement necessary as a result of such action.

Section 18.07 No Joint System. The Parties each own and operate separate interconnected electric systems, and no provision of the Interconnection Agreement shall be interpreted to mean or imply the Parties have established or intend to establish a jointly owned electric system, a joint venture, trust, a partnership, or any other type of association.

Section 18.08 Relationship to MISO Tariff. Nothing contained herein shall modify, amend or revise the obligations of the Parties under the MISO Tariff.

Section 18.09 Amendment. Except as provided in Section 11.02, any amendment, alteration, variation, modification or waiver of the provisions of this Interconnection Agreement, other than revisions to the Appendices authorized by this Interconnection Agreement, shall be valid only after it has been reduced to writing and duly signed by both Parties, and if required, approved by the appropriate regulatory bodies.

Section 18.10 Conflicts. In the event any term of this Interconnection Agreement conflicts with the Tariff, the terms of this Interconnection Agreement shall control.

Section 18.11 Waiver. The failure of either Party to enforce or insist upon compliance with or strict performance of any of the terms or conditions of this Interconnection Agreement, or to take advantage of any of its rights thereunder, shall not constitute a waiver or relinquishment of any such terms, conditions, or rights, but the same shall be and remain at all times in full force and effect.

Section 18.12 Counterparts. This Interconnection Agreement may be executed in any number of counterparts, and each executed counterpart shall have the same force and effect as an original instrument.

Section 18.13 Severability. If any governmental authority or court of competent jurisdiction holds that any provision of this Interconnection Agreement is invalid, or if, as a result of a change in any Federal or State law or constitutional provision, or any rule or regulation promulgated pursuant thereto, any provision of this Interconnection Agreement is rendered invalid or results in the impossibility of performance thereof, the remainder of this Interconnection Agreement not affected thereby shall continue in full force and effect. In such an event, the Parties shall promptly renegotiate in good faith new provisions to restore this Interconnection Agreement as nearly as possible to its original intent and effect.

SIGNATURES

In Witness Whereof, the Parties have caused this Interconnection Agreement to be duly executed as of this ____ day of _____ 20__.

[INSERT CUSTOMER NAME]
A [insert description]

By _____

Name: _____

Title: _____

Date: _____

NORTHERN STATES POWER COMPANY,
A Minnesota corporation, and
NORTHERN STATES POWER COMPANY,
A Wisconsin corporation

By _____

Name: _____

Title: _____

Date: _____

Xcel Energy Services Inc.
Authorized Agent

APPENDIX A

IDENTIFICATION OF POINTS OF INTERCONNECTION AND FACILITIES

APPENDIX B

NOTICES

Any notice, demand, request, or communication required or authorized by this Interconnection Agreement shall be hand delivered or mailed by certified mail, return receipt requested, with postage prepaid, to Parties, and may also provide a courtesy copy of such notice, demand, request, or communication via electronic mail, or email, as follows:

For Customer:	For Transmission Provider:
[insert]	[insert]

For Invoices:

[insert]	[insert]

For Operational Matters:

[insert]	[insert]

This designation and titles of the person to be notified or the address of such person may be changed at any time by written notice.

APPENDIX C

Template for Adding a New Point of Interconnection

The Parties understand that it may be necessary to add a Point of Interconnection. Should the Parties agree to add a Point of Interconnection, Interconnection Customer and Transmission Provider shall use the following form or another that is substantially similar to it for purposes of documenting their mutual agreement and to update the Point of Interconnection described in Appendix A to this Interconnection Agreement:

Facilities are located in_____

Included hereafter are the Interconnection Provisions and Interconnection Diagram for this Point of Interconnection and a completed Appendix E documenting the respective responsibilities of the Parties.

The costs of such Facilities shall be borne by Interconnection Customer or Transmission Provider as provided in Attachment U-1 to the Tariff.

In Witness Whereof, the Parties have confirmed these Interconnection Provisions to become part of Transmission to Load Interconnection Agreement between the Parties dated _____ __, 20__, and to be duly executed as of this ____ day of _____, 20___.

[CUSTOMER NAME]

By: _____

Name: _____

Title: _____

Date: _____

NORTHERN STATES POWER COMPANY
A Minnesota corporation and
NORTHERN STATES POWER COMPANY,
A Wisconsin corporation

By: _____

Name: _____

Title: _____

Date: _____

By Xcel Energy Services Inc.
Authorized Agent

APPENDIX D

Template for Modifying or Removing
Point of Interconnection

The Parties understand that it may be necessary to modify or remove Point of Interconnection. Should the Parties agree to modify or remove, Interconnection Customer and Transmission Provider shall use the following form or another that is substantially similar to it for purposes of documenting their mutual agreement and to update the Point of Interconnection described in Appendix A to this Interconnection Agreement:

Facilities are located in_____

Included hereafter are the Interconnection Provisions and Interconnection Diagram for this Point of Interconnection and a completed Appendix E documenting the respective responsibilities of the Parties.

The costs of such Facilities shall be borne by Interconnection Customer or Transmission Provider as provided in Attachment U-1 to the Tariff.

In Witness Whereof, the Parties have confirmed these Interconnection Provisions to become part of Transmission to Load Interconnection Agreement between the Parties dated _____ __, 20__, and to be duly executed as of this ____ day of _____, 20___.

[CUSTOMER NAME]

By: _____

Name: _____

Title: _____

Date: _____

NORTHERN STATES POWER COMPANY
A Minnesota corporation and
NORTHERN STATES POWER COMPANY,
A Wisconsin corporation

By: _____

Name: _____

Title: _____

Date: _____

By Xcel Energy Services Inc.
Authorized Agent

APPENDIX E:

INTERCONNECTION PROVISIONS

_____ DISTRIBUTION SUBSTATION AND
RELATED TRANSMISSION SYSTEM MODIFICATIONS

	Description	Owner	Operator	Maintenance Responsibility	Financial Responsibility For Construction	Financial Responsibility For O&M	Financial Responsibility For Replacement	Responsibility to Accomplish Engineering Design and Construction
	SUBSTATION							
	TRANSMISSION							
	METERING AND TELEMETRY							

APPENDIX F-1

INSURANCE AND INDEMNIFICATION OBLIGATIONS FOR A MINNESOTA MUNICIPALITY

A. Insurance Coverages. If Interconnection Customer is subject to Minn. Stat. § 466.04, as amended from time to time, or any successor statute, Interconnection Customer shall, at its own expense, maintain in force until this Interconnection Agreement is terminated or until released by Transmission Provider, insurance coverages equal to the maximum limitation on liabilities set forth in Minn. Stat. § 466.04.

Interconnection Customer shall use its best efforts to ensure that Transmission Provider and its parent, associated and Affiliate companies and their respective directors, officers, agents, servants and employees shall be named as an additional insured under Interconnection Customer's Commercial General Liability Insurance policy, at Transmission Provider's expense, if any, for all incremental costs. The additional insured coverage for Transmission Provider shall be up to $500,000 per claimant, and $1,500,000 for all claims arising out of a single occurrence (or other amounts, if higher, consistent with the Interconnection Customer's policy and state law), without diminishing Interconnection Customer's ability to recover its own liabilities under the policy.

In the event that Interconnection Customer cannot obtain such insurance coverage for the Transmission Provider and its parent, associated and Affiliate companies and their respective directors, officers, agents, servants and employees, or in the event that such coverage would be at an unacceptably high expense to Transmission Provider, then the Parties shall make good-faith efforts to negotiate mutually agreeable alternative arrangements.

Notwithstanding the foregoing, nothing herein shall prevent Transmission Provider and Interconnection Customer from agreeing to different insurance limits from those provided in this Appendix F-1. In such a case, the Parties shall set forth the mutually agreed-to insurance coverages in this Appendix F-1.

B. Indemnification. Subject to any applicable Minnesota law or statute limiting the indemnification obligations of Interconnection Customer to Transmission Provider, Interconnection Customer shall at all times indemnify, defend and hold harmless Transmission Provider, its shareholders, members, partners, Affiliates, employees, consultants, representatives, agents, successors and permitted assigns ("Indemnified Party") from any and all liability, damages, losses and claims, including claims and actions relating to injury to or death of any person or damage to property, demand, suits, recoveries, costs and expenses, court costs, attorney fees and all other obligations by or to third parties, arising out of or resulting from Interconnection Customer's ("Indemnifying Party") negligence, or action or inactions of its obligations under this Interconnection Agreement, except in cases of negligence, gross negligence or intentional wrongdoing by the Indemnified Party.

Interconnection Customer's obligations to Transmission Provider under this paragraph shall be limited to $1,500,000 per occurrence.

APPENDIX F-2

INSURANCE AND INDEMNIFICATION OBLIGATIONS FOR A WISCONSIN MUNICIPALITY

A. Insurance Coverages. If Interconnection Customer is subject to Wis. Stat. § 893.80, as amended from time to time, or any successor statute, Interconnection Customer shall, at its own expense, maintain in force until this Interconnection Agreement is terminated or until released by Transmission Provider, insurance coverages equal to the maximum limitation on liabilities set forth in Wis. Stat. § 893.80.

Transmission Provider and its parent, associated and Affiliate companies and their respective directors, officers, agents, servants and employees shall be named as an additional insured under Interconnection Customer's Commercial General Liability Insurance policy. The additional insured coverage for Transmission Provider shall be equal to $1,000,000 per occurrence.

Notwithstanding the foregoing, nothing herein shall prevent Transmission Provider and Interconnection Customer from agreeing to different insurance limits from those provided in this Appendix F-2. In such a case, the Parties shall set forth the mutually agreed-to insurance coverages in this Appendix F-2.

B. Indemnification. Subject to any applicable Wisconsin law or statute limiting the indemnification obligations of Interconnection Customer to Transmission Provider, Interconnection Customer shall at all times indemnify, defend and hold harmless Transmission Provider, its shareholders, members, partners, Affiliates, employees, consultants, representatives, agents, successors and permitted assigns ("Indemnified Party") from any and all liability, damages, losses and claims, including claims and actions relating to injury to or death of any person or damage to property, demand, suits, recoveries, costs and expenses, court costs, attorney fees and all other obligations by or to third parties, arising out of or resulting from Interconnection Customer's ("Indemnifying Party") negligence, or action or inactions of its obligations under this Interconnection Agreement, except in cases of negligence, gross negligence or intentional wrongdoing by the Indemnified Party.

Interconnection Customer's obligations to Transmission Provider under this paragraph shall be limited to $50,000 per occurrence.

APPENDIX F-3

INSURANCE AND INDEMNIFICATION OBLIGATIONS FOR A NORTH DAKOTA MUNICIPALITY

A. Insurance Coverages. If Interconnection Customer is subject to N.D. Cent. Code § 32-12.1, as amended from time to time, or any successor statute, Interconnection Customer shall, at its own expense, maintain in force until this Interconnection Agreement is terminated or until released by Transmission Provider, insurance coverages equal to the maximum limitation on liabilities set forth in N.D. Cent. Code § 32-12.1-03.

Interconnection Customer shall use its best efforts to ensure that Transmission Provider and its parent, associated and Affiliate companies and their respective directors, officers, agents, servants and employees shall be named as an additional insured under Interconnection Customer's Commercial General Liability Insurance policy, at Transmission Provider's expense, if any, for all incremental costs. The additional insured coverage for Transmission Provider shall be up to $250,000 per claimant, and $500,000 for three or more claims arising out of a single occurrence (or other amounts, if higher, consistent with the Interconnection Customer's policy and state law), without diminishing Interconnection Customer's ability to recover its own liabilities under the policy.

In the event that Interconnection Customer cannot obtain such insurance coverage for the Transmission Provider and its parent, associated and Affiliate companies and their respective directors, officers, agents, servants and employees, or in the event that such coverage would be at an unacceptably high expense to Transmission Provider, then the Parties shall make good-faith efforts to negotiate mutually agreeable alternative arrangements.

Notwithstanding the foregoing, nothing herein shall prevent Transmission Provider and Interconnection Customer from agreeing to different insurance limits from those provided in this Appendix F-3. In such a case, the Parties shall set forth the mutually agreed-to insurance coverages in this Appendix F-3.

B. Indemnification. Subject to any applicable North Dakota law or statute limiting the indemnification obligations of Interconnection Customer to Transmission Provider, Interconnection Customer shall at all times indemnify, defend and hold harmless Transmission Provider, its shareholders, members, partners, Affiliates, employees, consultants, representatives, agents, successors and permitted assigns ("Indemnified Party") from any and all liability, damages, losses and claims, including claims and actions relating to injury to or death of any person or damage to property, demand, suits, recoveries, costs and expenses, court costs, attorney fees and all other obligations by or to third parties, arising out of or resulting from Interconnection Customer's ("Indemnifying Party") negligence, or action or inactions of its obligations under this Interconnection Agreement, except in cases of negligence, gross negligence or intentional wrongdoing by the Indemnified Party.

Interconnection Customer's obligations to Transmission Provider under this paragraph shall be limited to $1,500,000 per occurrence.

APPENDIX F-4

INSURANCE AND INDEMNIFICATION OBLIGATIONS FOR A SOUTH DAKOTA MUNICIPALITY

A. Insurance Coverages. If Interconnection Customer is subject to SDCL § 21-32A-3, as amended from time to time, or any successor statute, Interconnection Customer shall, at its own expense, maintain in force until this Interconnection Agreement is terminated or until released by Transmission Provider, liability insurance coverage equal to $250,000 per claimant, and $500,000 for three or more claims arising out of a single occurrence.

Interconnection Customer shall use its best efforts to ensure that Transmission Provider and its parent, associated and Affiliate companies and their respective directors, officers, agents, servants and employees shall be named as an additional insured under Interconnection Customer's Commercial General Liability Insurance policy, at Transmission Provider's expense, if any, for all incremental costs. The additional insured coverage for Transmission Provider shall be up to $250,000 per claimant, and $500,000 for three or more claims arising out of a single occurrence (or other amounts, if higher, consistent with the Interconnection Customer's policy and state law), without diminishing Interconnection Customer's ability to recover its own liabilities under the policy.

In the event that Interconnection Customer cannot obtain such insurance coverage for the Transmission Provider and its parent, associated and Affiliate companies and their respective directors, officers, agents, servants and employees, or in the event that such coverage would be at an unacceptably high expense to Transmission Provider, then the Parties shall make good-faith efforts to negotiate mutually agreeable alternative arrangements.

Notwithstanding the foregoing, nothing herein shall prevent Transmission Provider and Interconnection Customer from agreeing to different insurance limits from those provided in this Appendix F-4. In such a case, the Parties shall set forth the mutually agreed-to insurance coverages in this Appendix F-4.

B. Indemnification. Subject to any applicable South Dakota law or statute limiting the indemnification obligations of Interconnection Customer to Transmission Provider, Interconnection Customer shall at all times indemnify, defend and hold harmless Transmission Provider, its shareholders, members, partners, Affiliates, employees, consultants, representatives, agents, successors and permitted assigns ("Indemnified Party") from any and all liability, damages, losses and claims, including claims and actions relating to injury to or death of any person or damage to property, demand, suits, recoveries, costs and expenses, court costs, attorney fees and all other obligations by or to third parties, arising out of or resulting from Interconnection Customer's ("Indemnifying Party") negligence, or action or inactions of its obligations under this Interconnection Agreement, except in cases of negligence, gross negligence or intentional wrongdoing by the Indemnified Party.

Interconnection Customer's obligations to Transmission Provider under this paragraph shall be limited to $1,500,000 per occurrence.

APPENDIX F-5

INSURANCE AND INDEMNIFICATION OBLIGATIONS FOR A MICHIGAN MUNICIPALITY

A. Insurance Coverages. If Interconnection Customer is subject to Michigan's Governmental Tort Liability Act ("GTLA"), MCL § 691.1401 *et seq*., as amended from time to time, or any successor statute, Interconnection Customer shall, at its own expense, maintain in force until this Interconnection Agreement is terminated or until released by Transmission Provider, insurance coverages equal to the maximum limitation on liabilities set forth in the GTLA.

> Notwithstanding the foregoing, nothing herein shall prevent Transmission Provider and Interconnection Customer from agreeing to different insurance limits from those provided in this Appendix F-5. In such a case, the Parties shall set forth the mutually agreed-to insurance coverages in this Appendix F-5.

B. Indemnification. Subject to applicable Michigan law or statute, the Interconnection Customer shall defend, indemnify and hold the Transmission Provider harmless from any and all liabilities, losses, damages, costs and expenses of any kind (including, without limitation, the reasonable fees and disbursements of counsel) asserted by a third party relating to or arising out of this Agreement; provided, however, that the Transmission Provider shall have no right to be indemnified hereunder for its own negligence, gross negligence, bad faith or willful misconduct.

Interconnection Customer's obligations to Transmission Provider under this paragraph shall be limited to $1,000,000 and extends only to instances in which the underlying claim is covered under Interconnection Customer's Commercial General Liability Insurance policy.

U-1 Proc for Load Intercon Svc NSP Sys Version: 0.0.1 Effective: 8/1/2014

ATTACHMENT U-1

INTERCONNECTION REQUEST AND COST ALLOCATION PROCEDURES FOR LOAD INTERCONNECTIONS TO THE NSP SYSTEM

1.0 Standards

The purpose of this Attachment U-1 is to define the cost allocation for new or Interconnection Customer requested modifications to transmission-to-load interconnection facilities to be interconnected to the NSP System ("Transmission Provider") by a transmission to load interconnection customer ("Interconnection Customer"). Transmission Provider will apply these interconnection request and cost allocation procedures ("Procedures"), which include processes, costs, cost allocations, funding, pre-funding and the provision of security, and forecasting requirements, in a just and reasonable, non-discriminatory manner to any Interconnection Customer that requests a new load interconnection or requests an expansion or modification to an existing load interconnection to the NSP System. Transmission Provider shall not allocate, assign, or charge any costs to Interconnection Customer which are unjust and unreasonable, discriminatory or inconsistent with the Commission's cost allocation principles. Furthermore, Transmission Provider and Interconnection Customer shall fulfill any obligations set forth herein in accordance with Good Utility Practice. In the event that facilities covered by this Attachment U-1 qualify for cost recovery pursuant to the MISO Tariff or otherwise qualify as Network Upgrades, costs for such facilities will be charged and allowed in accordance with FERC rules, as appropriate.

2.0 Process for Requesting a New or Modified Load Interconnection

Interconnection Customer may submit a Transmission System Interconnection Request (Request) to Transmission Provider using the Request form located on the Xcel Energy Transmission website (http://www.xcelenergy.com/About_Us/Transmission/About_Transmission/Interconnections_for_Transmission). When making such a request, Interconnection Customer shall provide a written description of the load serving facilities it proposes to connect to Transmission Provider's Transmission System, the requested in-service date, and the location of the proposed point or points of interconnection. Requests must be received no later than February 1st for in-service the following calendar year. Requests received by February 1st for in-service the following calendar year will be studied with other such comparable requests, which may result in expedited review and completion. Submitting a request by February 1st does not guarantee, however, that the new load serving interconnection will be constructed and in-service by the date requested. Out of cycle requests, as appropriate, will be considered on a case by case and non-discriminatory basis. Transmission Provider shall notify any other affected transmission or distribution system owners and operators (if any) of the Request. Upon receipt of a Request from Interconnection Customer, Transmission Provider will perform an initial assessment of the feasibility of the proposed interconnection. If the initial assessment indicates a more detailed interconnection study is required, Transmission Provider will notify Interconnection Customer.

Transmission Provider shall post all Requests on its website, including a list for new load interconnection points NSPM or NSPW intends to add to the NSP Transmission System for purposes of meeting NSPM or NSPW's retail load serving obligations. Such posting shall include the project identifier, requester, date of request, progress stage completed, and expected completion date.

Within thirty (30) days of receipt of the Request, Transmission Provider will tender a System Impact Study Agreement to Interconnection Customer and an estimate of the reasonable costs of the planning and engineering studies, where applicable. If necessary, Transmission Provider may also require a Facilities Study Agreement. The reasonable costs of these studies are to be funded in advance, with 100% of the estimated cost due by Interconnection Customer when the study agreement is executed. Transmission Provider will not commence work on any studies prior to receipt of the signed load interconnection System Impact Study Agreement and/or Facilities Study Agreement and payment for the estimated study costs. If the actual costs of such studies exceed the estimate, Interconnection Customer shall fund such additional amounts upon issuance of an invoice by Transmission Provider. If actual costs of such studies are less than the amount funded, Transmission Provider will refund the difference to Interconnection Customer with interest in accordance with 18

C.F.R. § 35.19a.

The System Impact Study, where applicable, will determine the feasibility of the new load interconnection, the impact to Transmission Provider and affected utilities, and the Interconnection Facilities and Network Upgrades (both as defined in Attachment U to the Transmission Provider's Tariff), if any, which are required to accommodate the requested interconnection. The Facilities Study, if required, will identify the Transmission Provider Interconnection Facilities and Network Upgrades required to install such interconnection, provide an estimated construction schedule and the estimated costs (+/- 20%). The Transmission Provider will use due diligence to complete the System Impact Study within a ninety (90) day period for loads under 20 MWs, and if a Facilities Study is required, Transmission Provider will have an additional ninety (90) day period to complete this study. However, failure to complete a study within such ninety (90) day period shall not be a violation of this Tariff. The study completion time for interconnecting loads exceeding 20 MWs will be coordinated and agreed to between the Transmission Provider and the Interconnection Customer. Upon completion, Transmission Provider will provide a copy of the System Impact Study and, if applicable, the Facilities Study to Interconnection Customer together with the proposed cost allocation for the Transmission Provider Interconnection Facilities and Network Upgrades, such allocation to be determined in accordance with this Attachment U-1.

Within fifteen (15) days of Transmission Provider's issuance of the System Impact Study and/or Facility Study, or such longer period as may be mutually agreed, Interconnection Customer shall provide any comments on the study(ies) to Transmission Provider, which shall incorporate any requested modifications to the extent consistent with Good Utility Practice.

Within thirty (30) days of Transmission Provider's issuance of the System Impact Study and/or Facility Study, or such longer period as may be mutually agreed, Interconnection Customer shall provide written notice to Transmission Provider if it intends to proceed with installation of the load interconnection. If Interconnection Customer does not provide such written notice or otherwise provide comments on the System Impact Study and/or Facility Study, the Request will be deemed withdrawn.

Transmission Provider will not proceed with construction of such interconnection without an executed agreement for interconnection service, which may include design, procurement construction and operation obligations related to the new or modified point of interconnection, as applicable. If the Request is submitted by an Interconnection Customer not presently interconnected to the NSP System, such

Agreement shall be in the form provided in Attachment U to the Transmission Provider's Tariff (Interconnection Agreement). If the Request is submitted by an Interconnection Customer that has already executed an Interconnection Agreement, such agreement shall be in the form set forth in Appendix C (Adding a New Point of Interconnection) or Appendix D (Modifying or Removing an Existing Point of Interconnection) to Attachment U to the Transmission Provider's Tariff. As appropriate, Transmission Provider and Interconnection Customer may execute an Engineering and Procurement agreement to facilitate procurement of equipment with long lead times while the parties negotiate and finalize the terms and conditions of the Interconnection Agreement or Appendix C/Appendix D supplemental agreement.

Unless Interconnection Customer and Transmission Provider agree otherwise in such Interconnection Agreement or Appendix C or Appendix D supplemental agreement, and subject to Section 3.0 of these Procedures, Transmission Provider shall design, construct, own, operate and maintain the Transmission Provider Interconnection Facilities and Network Upgrades.

If Parties cannot agree on all of the terms of the Interconnection Agreement, or any amendment thereto, at the Interconnection Customer's written request, the Transmission Provider shall file the Interconnection Agreement and/or an Appendix C or Appendix D supplement thereto unexecuted with the Commission, or the Transmission Provider may file unilaterally, and request that the Commission establish just and reasonable terms, rates and conditions for the requested load interconnection.

3.1 Facility Cost Responsibility

All Transmission Provider Interconnection Facilities and Network Upgrade costs related to the new, modified or upgraded Point of Interconnection shall be allocated in accordance with this Section.

3.2 Transmission Provider Interconnection Facilities

Unless otherwise agreed in the Interconnection Agreement pursuant to Attachment U Section 4.06, in an Attachment U Appendix C agreement, in an Attachment U Appendix D agreement, or unless otherwise ordered by FERC under the Federal Power Act, Transmission Provider will own all Transmission Provider Interconnection Facilities and all costs for Transmission Provider's interconnection facilities related to the new, modified, or upgraded Point of Interconnection (or point of interconnection) will be directly assigned to, and be the financial responsibility of, Interconnection Customer.

If the Parties do not agree or FERC does not order the Parties to enter into an alternate ownership (meaning Transmission Provider will be the Party that designs, constructs and owns the Transmission Provider Interconnection Facilities at Interconnection Customer's cost or expense), Interconnection Customer, at its option, may select one of the following two (2) options for fulfilling its financial responsibility:

Option 1: Transmission Provider shall pre-pay one hundred percent (100%) of the actual design, procurement and construction costs for placing the Transmission Provider Interconnection Facilities into service. After the commercial operation date, Interconnection Customer shall pay a monthly facilities usage charge, which shall be calculated by Transmission Provider based on actual design, procurement and construction costs for placing the Transmission Provider Interconnection Facilities into service and in accordance with the formula set forth in Exhibit A to this Attachment U-1, to Transmission Provider.

Option 2: Interconnection Customer shall pre-pay one hundred percent (100%) of the estimated cost of the Transmission Provider Interconnection Facilities prior to construction by Transmission Provider. The estimated cost will include any costs Transmission Provider expects for income tax liability resulting from accepting a contribution in aid of construction payment from Interconnection Customer. Transmission Provider's income tax liability will be calculated on a grossed-up basis in accordance with the formula set forth in Exhibit B to this Attachment U-1. Transmission Provider and Interconnection Customer may agree to a milestone schedule by which Interconnection Customer shall make progress payments and Transmission Provider shall perform construction related activities. If the actual costs, including Transmission Provider's income tax liability, of such Transmission Provider Interconnection Facilities exceed the estimate, Interconnection Customer shall pay such additional amounts within thirty (30) days of issuance of an invoice by Transmission Provider. If the actual costs are less than the amount pre-paid, Transmission Provider will refund the difference to Interconnection Customer with interest in accordance with 18 C.F.R. §35.19a.

If the Transmission Provider includes costs for income tax liability on prepayments or Contributions in Aid of Construction, the Transmission Provider may charge only for taxes for which the Transmission Provider has made a good faith determination that the taxes are actually owed or that the Internal Revenue Service determines are owed. All subsequent reductions or recoveries of such amounts shall be refunded with interest in accordance with 18 C.F.R. §35.19.a. Similarly, the Parties shall specify in the Interconnection Agreement or Appendix C or Appendix D supplemental agreement the option (either Option 1 or Option 2) selected by Interconnection Customer.

3.3 Network Upgrades

Unless otherwise agreed in the Interconnection Agreement pursuant to Attachment U Section 4.06, in an Attachment U Appendix C agreement, in an Attachment U Appendix D agreement, or unless otherwise ordered by FERC under the Federal Power Act, and in accordance with Section 1.0 of this Attachment U-1, Transmission Provider will own all Network Upgrades and all costs related to the Network Upgrades necessary to construct the new or modified load serving interconnection will be the ultimate financial responsibility of Transmission Provider. Interconnection Customer may be required to pre-fund or provide financial security in a form acceptable to Transmission Provider until the Network Upgrades are placed in service. If an Interconnection Customer is required to provide financial security, such security shall be commercially reasonable, comply with the Transmission Provider's credit policy in effect from time to time, and will be released or refunded within thirty (30) days of in-service date of all Interconnection Facilities and Network Upgrades. If an Interconnection Customer is required to pre-fund Network Upgrade costs, Transmission Provider will refund (with interest) the amounts advanced for any Network Upgrades within thirty (30) days of the in-service date of all Network Upgrades. Any refund shall include interest calculated in accordance with the methodology set forth in FERC's regulations at 18 C.F.R. § 35.19(a)(2)(iii) from the date of any pre-funding for Network Upgrades through the refund date.

3.4 Other Requirements

Transmission Provider will not commence work on the Transmission Provider Interconnection Facilities or Network Upgrades prior to receipt of the executed Interconnection Agreement or Appendix C or Appendix D supplemental agreement and pre-payment or security for the estimated costs.

Within one hundred and twenty (120) days, or sooner, as determined by Transmission Provider, in the circumstances in which Interconnection Customer has provided security, of completing all construction related activities, Transmission Provider shall (1) release any remaining security to Interconnection Customer, as applicable, or (2) provide Interconnection Customer with an invoice of the final costs of the construction related activities and shall set forth such costs in sufficient detail to enable Interconnection Customer to compare the actual costs with the estimates and to ascertain deviations, if any, from the cost

estimates. Transmission Provider shall refund, with interest (calculated in accordance with 18 C.F.R. § 35.19(a)(2)(iii)), to Interconnection Customer any amount by which the actual prepayment by Interconnection Customer for estimated construction related costs exceeds the actual costs of construction related activities within thirty (30) days of the issuance of such final construction invoice. In the event that the actual costs of construction related activities exceeds the prepayment amount paid by Interconnection Customer, then Interconnection Customer shall pay the balance due to Transmission Provider within thirty (30) days of the issuance of such final construction invoice.

If the Interconnection Customer fails to complete the new or modified interconnection facilities for any reason, Transmission Provider may retain the financial security and/or pre-paid amounts to offset the costs incurred by Transmission Provider. Any disputes under this provision shall be resolved in accordance with the dispute resolution provisions of the Tariff.

4.0 Outages

Transmission Provider shall be responsible for notifying MISO and the Regional Reliability Coordinator (if necessary) of any transmission outages necessary to install the new or modified load serving interconnection facilities and Network Upgrades.

5.0 Annual Interconnection Forecasts and Other Information Requirements

The load serving Interconnection Customer shall, upon request, provide the Transmission Provider with such reports and information concerning its network operation as are reasonably necessary to enable the Transmission Provider to adequately operate and maintain its Transmission System.

By January 10 of each year, each load serving Interconnection Customer shall provide a forecast ("Forecast") for the upcoming five (5) years of Interconnection Customer's projected loads by point of interconnection. On an annual basis, Transmission Provider shall advise Interconnection Customer of the data and format requirements for the Forecast, taking into account the reasonable use of historically based load growth projections. If Interconnection Customer inputs their projected loads directly into the MISO Model on Demand database ("MOD"), Interconnection Customer shall be deemed compliant with the five year projected load forecast requirement.

As part of its system evaluation and planning process, Transmission Provider may periodically perform studies to evaluate the impact of load additions. In some cases, these studies may be conducted in coordination with MISO. These studies will be based on the load Forecast inputs received through the annual Interconnection Customer Forecasts.

EXHIBIT A – FACILITIES USAGE RATE

Formula Rate calculation

Rate Formula Template
Utilizing Attachment O Data

Northern States Power Companies

For the 12 months ended 12/31/2013

To be completed in conjunction with Attachment O.

Line No.	(1)	(2) Attachment O Page, Line, Col.	(3) Transmission		(4) Allocator
1	Gross Transmission Plant - Total	Attach O, p 2, line 2 col 5 (Note A)		Data updated annually	
2	Net Transmission Plant - Total	Attach O, p 2, line 14 and 23b col 5 (Note B)		Data updated annually	
	O&M EXPENSE				
3	Total O&M Allocated to Transmission	Attach O, p 3, line 8 col 5		Data updated annually	
4	Annual Allocation Factor for O&M	(line 3 divided by line 1 col 3)	0.00%		0.00%
	GENERAL AND COMMON (G&C) DEPRECIATION EXPENSE				
5	Total G&C Depreciation Expense	Attach O, p 3, lines 10 & 11, col 5 (Note H)		Data updated annually	
6	Annual Allocation Factor for G&C Depreciation Expense	(line 5 divided by line 1 col 3)	0.00%		0.00%
	TAXES OTHER THAN INCOME TAXES				
7	Total Other Taxes	Attach O, p 3, line 20 col 5		Data updated annually	
8	Annual Allocation Factor for Other Taxes	(line 7 divided by line 1 col 3)	0.00%		0.00%
9	**Annual Allocation Factor for Expense**	**Sum of line 4, 6, and 8**			**0.00%**
	INCOME TAXES				
10	Total Income Taxes	Attach O, p 3, line 27 col 5		Data updated annually	
11	Annual Allocation Factor for Income Taxes	(line 10 divided by line 2 col 3)	0.00%		0.00%
	RETURN				
12	Return on Rate Base	Attach O, p 3, line 28 col 5		Data updated annually	
13	Annual Allocation Factor for Return on Rate Base	(line 12 divided by line 2 col 3)	0.00%		0.00%
14	**Annual Allocation Factor for Return**	**Sum of line 11 and 13**			**0.00%**

Formula Rate calculation

Rate Formula Template
Utilizing Attachment O Data

For the 12 months ended 12/31/2013

Page 2 of 2

Northern States Power Companies

Transmission Provider Interconnection Facilities (TPIF) Charge Calculation

	(1)	(2)	(3)	(4)	(5)	(6)	(7)	(8)	(9)	(10)	(11)	(12)
Line No.	Project Name	MTEP Project Number	Project Gross Plant	Annual Allocation Factor for Expense	Annual Expense Charge	Project Net Plant	Annual Allocation Factor for Return	Annual Return Charge	Project Depreciation Expense	Annual Revenue Requirement	True-Up Adjustment	TPIF Charge
			(Note C)	(Page 1 line 9)	(Col. 3 * Col. 4)	(Note D)	(Page 1 line 14)	(Col. 6 * Col. 7)	(Note E)	(Sum Col. 5, 8 & 9)	(Note F)	Sum Col. 10 & 11 (Note G)
1a												
2	Annual Totals											

Note Letter

A Gross Transmission Plant is that identified on page 2 line 2 of Attachment O and includes any sub lines 2a or 2b etc. and is inclusive of any CWIP included in rate base when authorized by FERC orderless any prefunded AFUDC, if applicable.
B Net Transmission Plant is that identified on page 2 line 14 of Attachment O and includes any sub lines 14a or 14b etc. and is inclusive of any CWIP included in rate base when authorized by FERC orderless any prefunded AFUDC, if applicable.
C Project Gross Plant is the total capital investment for the project calculated in the same method as the gross plant value in line 1 and includes CWIP in rate base less any prefunded AFUDC, if applicable. This value includes subsequent capital investments required to maintain the facilities to their original capabilities.
D Project Net Plant is the Project Gross Plant Identified in Column 3 less the associated Accumulated Depreciation.
E Project Depreciation Expense is the actual value booked for the project and included in the Depreciation Expense in Attachment O page 3 line 12.
F True-Up Adjustment is included pursuant to a FERC approved methodology, if applicable.
G The TPIF Charge is the value to be used in Schedule 26.
H The Total General and Common Depreciation Expense excludes any depreciation expense directly associated with a project and thereby included in page 2 column 9.

U-1 Exhibit B Version: 0.0.0 Effective: 8/1/2014

ATTACHMENT U-1

EXHIBIT B
TAX GROSS UP CALCULATION

Any income tax liability projected by Transmission Provider as a result of Interconnection Customer selecting Option 2 under Attachment U-1 shall be calculated on a fully grossed-up basis.

The Parties agree that “fully grossed-up basis” means that Interconnection Customer will pay Transmission Provider, in addition to the amount paid for the Transmission Provider Interconnection Facilities, an amount equal to (1) the current taxes imposed on Transmission Provider ("Current Taxes") on the excess of (a) the gross income realized by Transmission Provider as a result of payments or property transfers made by Interconnection Customer to Transmission Provider under this Agreement for the Transmission Provider Interconnection Facilities (without regard to any payments under this Exhibit B) (the "Gross Income Amount") over

(b) the present value of future tax deductions for depreciation that will be available as a result of such payments or property transfers (the "Present Value Depreciation Amount"), plus (2) an additional amount sufficient to permit Transmission Provider to receive and retain, after the payment of all Current Taxes, an amount equal to the net amount described in clause (1). For this purpose, (i) Current Taxes shall be computed based on Transmission Provider's composite federal and state tax rates at the time the payments or property transfers are received and Transmission Provider will be treated as being subject to tax at the highest marginal rates in effect at that time (the "Current Tax Rate"), and (ii) the Present Value Depreciation Amount shall be computed by discounting Transmission Provider’s anticipated tax depreciation deductions as a result of such payments or property transfers by Transmission Provider's current weighted average cost of capital.

Thus, the formula for calculating Interconnection Customer's liability to Transmission Provider pursuant to this Exhibit B can be expressed as follows: (Current Tax Rate x (Gross Income Amount - Present Value of Tax Depreciation))/(1-Current Tax Rate).

ATTACHMENT V

Form of Service Agreement For Joint Dispatch Transmission Service Applicable to the Public Service Company of Colorado (PSCo) System

1.0 This Joint Dispatch Transmission Service Agreement, dated as of _____, is entered into, by and between _____ ("Transmission Provider"), and _____ ("Joint Dispatch Transmission Customer"), all of whom may be referred to individually as "Party" or jointly as "Parties".

2.0 The Joint Dispatch Transmission Customer has been determined by the Transmission Provider to have a signed a Joint Dispatch Agreement.

3.0 Service under this agreement shall commence on the later of (1) the requested service commencement date, or (2) such other date as it is permitted to become effective by the Commission. Service under this agreement shall terminate on such date as mutually agreed upon by the parties.

4.0 Any notice or request made to or by either Party regarding this Service Agreement shall be made to the representative of the other Party as indicated below.

Transmission Provider:

_____

_____

_____

Transmission Customer:

_____

_____

_____

5.0 The Tariff is incorporated herein and made a part hereof.

IN WITNESS WHEREOF, the Parties have caused this Service Agreement to be executed by their respective authorized officials.

Transmission Provider:

By: _____ _____ _____
Name Title Date

Transmission Customer:

By: _____ _____ _____
Name Title Date

ATTACHMENT AA

Service Agreements For Point-To-Point Transmission Service

355-PSCo WAPA-LTF P2P-Agrmt-Non-Conforming Version: 0.0.0 Effective: 12/1/2013

SERVICE AGREEMENT NO. 355-PSCO

(Western Agreement No. 13-RMR-2374)

FOR

LONG-TERM FIRM POINT-TO-POINT TRANSMISSION SERVICE

BETWEEN

WESTERN AREA POWER ADMINISTRATION

AND

PUBLIC SERVICE COMPANY OF COLORADO

ATTACHMENT A-2

Form of Service Agreement For
Long-Term Firm Point-To-Point Transmission Service

1.0 This Service Agreement, dated as of November 1 2013, is entered into, by and between Public Service Company of Colorado ("Transmission Provider" or "PSCo"), and Western Area Power Administration ("Transmission Customer" or "Western"), all of whom may be referred to individually as "Party" or jointly as "Parties."

2.0 The Transmission Customer has been determined by the Transmission Provider to have a Completed Application for Firm Point-To-Point Transmission Service under the Tariff.

3.0 The Transmission Customer has provided to the Transmission Provider an Application deposit in accordance with the provisions of Section 17.3 of the Tariff. Not applicable.

4.0 Service under this agreement shall commence on the later of (1) the requested service commencement date, or (2) the date on which construction of any Direct Assignment Facilities and/or Network Upgrades are completed, or (3) such other date as it is permitted to become effective by the Commission. Service under this agreement shall terminate on such date as mutually agreed upon by the Parties.

5.0 The Transmission Provider agrees to provide and the Transmission Customer agrees to take and pay for Firm Point-To-Point Transmission Service in accordance with the provisions of the Tariff, as it may be amended from time to time, and this Service Agreement.

6.0 Any notice or request made to or by either Party regarding this Service Agreement shall be made to the representative of the other Party as indicated below.

Transmission Provider:

Manager, Transmission Business Relations
Xcel Energy
414 Nicollet Mall, MP08
Minneapolis, MN 55401

Transmission Customer:

Power Marketing Manager, J6000
Western Area Power Administration
Rocky Mountain Region

First Class Mail:

P.O. Box 3700
Loveland, CO 80539-3003
Overnight Delivery:

5555 East Crossroads Boulevard

Loveland, CO 80538

7.0 The Tariff is incorporated herein and made a part hereof to the extent it is consistent with Federal Law.

IN WITNESS WHEREOF, the Parties have caused this Service Agreement to be executed by their respective authorized officials.

Transmission Provider:

By:	/s/ *Ian R. Benson* Ian Benson	Director Transmission Planning and Business Relations Title Xcel Energy Services Inc. Agent for Public Service Company of Colorado	11/26/13 Date

Transmission Customer:

By:	/s/ *David Neumayer* David Neumayer	Power Marketing Manager Title	November 22, 2013 Date

Specifications For Long-Term Firm Point-To-Point Transmission Service

1.0 Term of Transaction: 10 years, 10 months

Start Date: December 1, 2013 (conversion of grandfathered Contract No. 88-LAO-376, Interconnections and Transmission Service, dated December 31, 1990).

Termination Date: October 1, 2024, or upon one year notice by Transmission Customer to Transmission Provider, or upon mutual agreement.

2.0 Description of capacity and energy to be transmitted by Transmission Provider including the electric Control Area in which the transaction originates.

Firm capacity and energy to be transmitted by Transmission Provider from Malta 230-kV Substation to Ault 230-kV Substation.

3.0 Point(s) of Receipt: Malta 230-kV
Delivering Party: Transmission Customer

4.0 Point(s) of Delivery: Ault 230-kV
Receiving Party: Transmission Customer

5.0 Maximum amount of capacity and energy to be transmitted (Reserved Capacity): 30 MW

6.0 Designation of party(ies) subject to reciprocal service obligation: Western Area Power Administration

7.0 Name(s) of any Intervening Systems providing transmission service: None.

8.0 Service under this Agreement may be subject to some combination of the charges detailed below. (The appropriate charges for individual transactions will be determined in accordance with the terms and conditions of the Tariff.)

8.1 Transmission Charge: As set forth in the Schedule 7 of the Tariff.

8.2 System Impact and/or Facilities Study Charge(s): None.

8.3 Direct Assignment Facilities Charge: None.

8.4 Ancillary Services Charges:

8.4.1 Ancillary Services Provided by Transmission Provider:

8.4.1.1 Scheduling, System Control and Dispatch Service – Schedule 1

8.4.1.2 Regulation and Frequency Response Service – Not applicable as the capacity used is from Western's resources that are pseudo tied inside WACM to Western's loads inside WACM.

8.4.2 Ancillary Services Self-Provided by Transmission Customer:

8.4.2.1 Reactive Supply and Voltage Control - Not applicable as Western's resources are pseudo tied inside WACM to Western's loads inside WACM.

8.4.2.2 Operating Reserves - Spinning Reserve Service

8.4.2.3 Operating Reserves - Supplemental Reserve Service

8.4.3 Energy Imbalance Service - Not applicable

8.4.4 Generation Imbalance Service - Not applicable, for Western's generation resources pseudo tied inside WACM to Western's loads inside WACM.

9.0 Loss Compensation Service:

9.1 Transmission Customer shall pay for its Real Power Losses at the rate set forth in Section 28.5 of the Tariff (currently, 2.56%) or alternatively, have the option to provide in-kind Real Power Losses to PSCo.

9.2 Transmission Customer's Real Power Losses obligation will be calculated based upon the daily total of Transmission Customer's schedules on the PTP transmission reservation multiplied by the loss rate set forth in Section 28.5 of the Tariff (currently, 2.56%). If the PTP reservation is not used to schedule energy, loss obligations will be calculated based upon the Mount Elbert generation level less the sum of all scheduled deliveries to Western's customers provided under Network Integration Transmission Service Agreement 13-RMR-2368/325-PSCO.

9.3 Alternatively, Transmission Customer may exercise its option at any time to settle its Real Power Losses obligation by providing in-kind Real Power Losses to PSCo by providing two (2) business days prior to the 10th calendar day of the month advance written notification to PSCo. Western shall return in-kind energy as described in Schedule 14 of the PSCO OATT.

10. Net Billing and Bill Crediting:

10.1 Public Service shall accept payment from third parties of amounts due Public Service from Western and shall notify Western of the date of receipt of each payment. Public Service shall credit Western for such payments the same as if they had been made directly by Western. This obligation to accept payment from a third party does not release Western of its obligation to pay Public Service if a third party is unwilling or unable to pay. In the event third party payment to Public Service exceeds Western's payment obligation to Public Service, Public Service shall apply the excess credit as an offset to the following month's payment of obligations due from Western. In the event Western directs more than one third

party to make payment to Public Service and the total payments exceed Western's payment obligation to Public Service, Public Service shall apply the excess credit as an offset to the following month's payment of obligation due from Western.

10.2 Payments due Western by Public Service shall be paid by Public Service to a third party when so directed by Western. Any third party designated to receive payment in lieu of Western, and the amount to be paid to that party, will be so identified in writing to Public Service with the monthly power bill. The payment to the third party shall be due and payable by the payment due date specified on Western's bill. When remitting payment to a designated third party, Public Service shall indicate that such payment is being made on behalf of Western. Western shall credit Public Service for the amount paid as if payment had been made directly to Western. All other payment provisions shall remain in full force and effect. This payment to the designated third party releases Public Service from all further payment obligations to Western.

ATTACHMENT BB

Service Agreements For Network Transmission Service

SERVICE AGREEMENT NO. 325-PSCO

(Western Agreement No. 13-RMR-2368)

NETWORK INTEGRATION TRANSMISSION SERVICE

BETWEEN

WESTERN AREA POWER ADMINISTRATION

AND

PUBLIC SERVICE COMPANY OF COLORADO

DATED: November 26, 2013

Service Agreement For
Network Integration Transmission Service

1.0 This Service Agreement, dated as of November 26, 2013, is entered into, by and between Public Service Company of Colorado ("Transmission Provider" or "PSCo"), and Western Area Power Administration ("Network Customer" or "Western") each of whom may be referred to individually as "Party" or jointly as "Parties."

2.0 The Network Customer has been determined by the Transmission Provider to have a Completed Application for Network Integration Transmission Service under the Tariff.

3.0 The Network Customer has met the provisions of Section 29.2 of the Tariff.

4.0 The Network Customer and the Transmission Provider have completed all necessary technical arrangements in accordance with the provisions of Sections 29.3 and 29.4 of the Tariff.

5.0 The Network Customer and the Transmission Provider will develop and execute a Network Operating Agreement in accordance with Section 35.2 of the Tariff.

6.0 Service under this Service Agreement shall commence on December 1, 2013. Service under this Service Agreement shall terminate on the Termination Date as defined in Section 1.0 of the Specifications For Network Integration Transmission Service.

7.0 The Transmission Provider agrees to provide and the Network Customer agrees to take and pay for Network Integration Transmission Service in accordance with the provisions of Part III of the Tariff and this Service Agreement, as they may be amended from time to time.

8.0 Any notice or request made to or by either Party regarding this Service Agreement shall be made to the representative of the other Party as indicated below.

<u>Transmission Provider:</u>

Manager, Transmission Business Relations
Xcel Energy
414 Nicollet Mall, MP08
Minneapolis, MN 55401

<u>Network Customer:</u>

Power Marketing Manager, J6000
Western Area Power Administration
Rocky Mountain Region

First Class Mail:

P.O. Box 3700
Loveland, CO 80539-3003

Overnight Delivery:

5555 East Crossroads Boulevard
Loveland, CO 80538

9.0 The Tariff, Specifications For Network Integration Transmission Service, and Network Operating Agreement are incorporated herein and made a part hereof to the extent it is consistent with Federal law. The agreement specified in Section 5.0 above is supplementary hereto.

IN WITNESS WHEREOF, the Parties have caused this Service Agreement to be executed by their respective authorized officials.

Transmission Provider:

By: /S/ *Ian R. Benson* 11/26/13
Ian Benson Date
Director Transmission Planning and Business Relations
Xcel Energy Services Inc.
Authorized Agent for Public
Service Company of Colorado

Network Customer:

By: /s/ *David Neumayer* November 22, 2013
David Neumayer Date
Power Marketing Manager
Rocky Mountain Region
Western Area Power Administration

Specifications For Network Integration Transmission Service

1.0 Term of Network Service:

Start Date: December 1, 2013, (conversion of grandfathered Contract No. 88-LAO-376, Interconnections and Transmission Service, dated December 31, 1990).

Termination Date: October 1, 2024, or upon mutual agreement.

2.0 Description of capacity and energy to be transmitted by Transmission Provider including the electric Control Area in which the transaction originates:

Firm capacity and energy from Western's Designated Network Resources originating in the Western Area Colorado Missouri (WACM) Balancing Authority (BA) for delivery to Western's Designated Network Loads located within the PSCo BA or connected to PSCo's transmission system.

3.0 Designated Network Resources:

Firm capacity and energy delivered from: 1) Mount Elbert generation (Malta Substation) and Upper and Lower Molina generation (Collbran Substation), and 2) external generation delivered to the PSCo transmission system. Western's Designated Network Resources are identified in Attachment 1 to this Service Agreement. Pursuant to Section 31.6 of the Tariff, Western will provide written notification to PSCo annually of changes in its Designated Network Resources on or before September 1, or such other date established in the Tariff.

4.0 Designated Network Loads:

Western's Designated Network Loads are identified in Attachment 2 to this Service Agreement. The loads consist of: 1) Western's scheduled deliveries of firm electric service to customers using PSCo's transmission system, and 2) Mount Elbert and Silt Pumping Plant pump loads. The points of interconnection are specified in Attachment 3 to this Service Agreement. Pursuant to Section 31.6 of the Tariff, Western will provide written notification to PSCo annually of changes in its Designated Network Loads on or before September 1, or such other date established in the Tariff.

5.0 Designation of party(ies) subject to reciprocal service obligation:

Western Area Power Administration

6.0 Service under this Service Agreement may be subject to some combination of the charges detailed below. (The appropriate charges for individual transactions will be determined in accordance with the terms and conditions of the Tariff.)

6.1 Load Ratio Share of Annual Transmission Revenue Requirement:

Western's monthly Load Ratio Share shall be determined pursuant to Section 34 of the Tariff, and consistent with Section 6.7, Scheduling and Billing, below.

6.2 System Impact and/or Facilities Study Charge(s):

None.

6.3 Direct Assignment Facilities Charge:

None.

6.4 Local Distribution Facilities Charge:

None.

6.5 Ancillary Services Charges:

6.5.1 Ancillary Services Provided by PSCo:

6.5.1.1 Scheduling, System Control and Dispatch Service - Schedule 1

Based upon Western's Network Load coincident with PSCo's Monthly Transmission System Peak.

6.5.1.2 Regulation and Frequency Response Service - Schedule 3

Based upon Western's Network Load coincident with PSCo's Monthly Transmission System Peak.

6.5.1.3 Energy Imbalance Service – Schedule 4. Not applicable because Western's Designated Network Loads equal its schedule.

6.5.2 Ancillary Services Self-Provided by Western:

6.5.2.1 Reactive Supply and Voltage Control

Western, as the Network Customer, owns and operates hydropower plants that are directly connected to the Transmission Provider's transmission system at Malta Substation and Collbran Substation, which provide for reactive supply and voltage control. Transmission operators within the WACM BA and the PSCo BA continuously monitor the status of the transmission system in Colorado and coordinate voltage control to mitigate any voltage abnormality. Western uses its hydropower plants to support system voltage and to provide reactive supply in support of

reliable operation. Unless otherwise agreed, PSCo shall not be obligated to compensate Western for Reactive Supply and Voltage Control provided by Western hydro generation connected to the Transmission Provider's system.

6.5.2.2 Operating Reserves - Spinning Reserve Service, as provided through the Rocky Mountain Reserve Group (RMRG) contracts.

6.5.2.3 Operating Reserves - Supplemental Reserve Service, as provided through the RMRG contracts

6.5.2.4 Generation Imbalance Service – Not applicable, for Western's generation resources pseudo-tied inside WACM to Western's loads inside WACM.

6.6 Loss Compensation Service:

6.6.1 For Western's Monthly Network Load, Western shall pay for its Real Power Losses at the rate set forth in Section 28.5 of the Tariff (currently, 2.56%) or alternatively, have the option to provide in-kind Real Power Losses to PSCo.

6.6.2 Western's Real Power Losses obligation will be calculated based upon the daily total of Western's schedules multiplied by the loss rate set forth in Section 28.5 of the Tariff (currently, 2.56%).

6.6.3 Alternatively, Western may exercise its option at any time to settle its Real Power Losses obligation by providing in-kind Real Power Losses to PSCo by providing two (2) business days advance written notification to PSCo, prior to the 10th calendar day of the month. Western shall return in-kind energy by scheduling losses concurrently with energy schedules or by operation of its designated network resources.

6.7 Scheduling and Billing:

6.7.1 Schedules: Western's delivery schedules to its Designated Network Loads within PSCo's BA will be used to determine Western's network use. The Designated Network Loads are identified in Attachment 2 to this Service Agreement.

6.7.2 Monthly Transmission System Peak: By the tenth (10th) business day of each month, PSCo shall provide to Western the date and hour of its Monthly Transmission System Peak for the previous month as well as Western's scheduled deliveries for that date and hour (summary and itemized by Designated Network Load).

6.7.3 Billing: Each month, PSCo shall provide to Western an itemized invoice identifying the amount of network use at the time of PSCo's Monthly Transmission System Peak, including ancillary services, for each Western Designated Network Load/Firm Electric Service customer identified in Attachment 2 to this Service Agreement. Further, PSCo shall credit each Western Designated Network Load/Firm Electric Service customer by the

amount of energy delivered and billed to Western, including applicable ancillary services. For example, if Holy Cross Energy is a PSCo network customer and Western also delivers energy to Holy Cross Energy through this Service Agreement, Holy Cross Energy's monthly network use bill will not include the amount Western provides through this Service Agreement to Holy Cross Energy.

6.7.4 Reserve Activation: Western, as a member of the RMRG is obligated to provide contingency reserves to RMRG members. Western may use Mount Elbert generation to provide its share of contingency reserves. The Mount Elbert energy generated and transmitted on PSCo's transmission system for the purpose of delivering reserves to RMRG, or to a similar or successor reserve sharing group, of which Western and PSCo are both Members, shall be exempt from any transmission use assessment by PSCo.

6.7.5 Net Billing and Bill Crediting:

6.7.5.1 Public Service shall accept payment from third parties of amounts due Public Service from Western and shall notify Western of the date of receipt of each payment. Public Service shall credit Western for such payments the same as if they had been made directly by Western. This obligation to accept payment from a third party does not release Western of its obligation to pay Public Service if a third party is unwilling or unable to pay. In the event third party payment to Public Service exceeds Western's payment obligation to Public Service, Public Service shall apply the excess credit as an offset to the following month's payment of obligations due from Western. In the event Western directs more than one third party to make payment to Public Service and the total payments exceed Western's payment obligation to Public Service, Public Service shall apply the excess credit as an offset to the following month's payment of obligation due from Western.

6.7.5.2 Payments due Western by Public Service shall be paid by Public Service to a third party when so directed by Western. Any third party designated to receive payment in lieu of Western, and the amount to be paid to that party, will be so identified in writing to Public Service with the monthly power bill. The payment to the third party shall be due and payable by the payment due date specified on Western's bill. When remitting payment to a designated third party, Public Service shall indicate that such payment is being made on behalf of Western. Western shall credit Public Service for the amount paid as if payment had been made directly to Western. All other payment provisions shall remain in full force and effect. This payment to the designated third party releases Public Service from all further payment obligations to Western.

325-PSCo Appendix 1 thru 3 Version: 0.0.0 Effective: 12/1/2013

SERVICE AGREEMENT NO. 325-PSCO

Network Integration Transmission Service Agreement
Attachment 1
Western Resources

Western RMR Designated Network Resources				
Designated Network Resources	**Point of Receipt**	**Maximum kW**		
Upper and Lower Molina generation	Collbran Substation	13,500		
Mount Elbert generation	Malta Substation	206,000		
Western's External Generation (WACM				
BA) interconnected to the PSCo transmission system used when	Ault, Beaver Creek,			
Western's loads exceed Mount Elbert and	Hayden, Midway, Rifle,			
Upper/Lower Molina generation.*	and Weld Substations	351,739	**	
	TOTAL	351,739		
* When Mount Elbert and Upper/Lower Molina generation are lower than Western's total deliveries to its customers, the difference will be				
sourced and e-Tagged from the WACM BA. Example - If the sum of Western's deliveries is 90 MW, and the combined Mount Elbert and Molina generation is				
only 10 MW, the 80 MW difference was sourced from the WACM BA and will be e-Tagged. If no e-Tag exists, Energy Imbalance (Schedule 4) is applied.				
** This maximum could occur only at night when Mount Elbert and Upper/Lower Molina are not generating, and maximum				
Network Load deliveries are scheduled (including Mount Elbert pump loads), an unlikely circumstance.				

	Estimated Maximum Resource by Point of Receipt/Interconnection			
	Estimated			
	Maximum			
	Resource 1/	**Point of Receipt/**	**Probable**	**Delivery**
Designated Network Resources	**(MW)**	**Interconnection**	**Point of Receipt**	**Voltage**
Mount Elbert Units 1-2	206	Malta	Malta	230-kV
Upper Molina	9	Collbran	Collbran	115-kV
Lower Molina	5	Collbran	Collbran	115-kV
Morrow Point	29	***	Hayden/Midway/Rifle	230-kV
Flatiron Units 1 & 2	90	***	Ault/Beaver Creek/Weld	230-kV
Yellowtail Units 1-2	250	***	Ault/Beaver Creek/Weld	230-kV
TOTAL	589			
1/ Indicates the maximum capacity of the resource, not what will be scheduled to PSCo.				
*** Western External Generation (WACM BA)				

SERVICE AGREEMENT NO. 325-PSCO

Attachment 2
Western Loads

Western RMR Designated Network Loads					
Designated Network Load/Firm Electric Service Customer	**Point of Delivery (POD)**	**Point of Receipt (POR)**	**Loveland Area Projects (LAP) (kW) [1/] [2/]**	**Salt Lake City Area Integrated Projects (kW) [3/]**	**Total kW**
Town of Center	Center Tap (SLVA)	Ault (LAP) & Midway (CRSP)	260	1,675	1,935
Fountain	Midway Substation	Ault (AU)	2,305		2,305
Grand Valley Power	Collbran Substation (RFL)	Rifle (RFL)		1,474	1,474
Holy Cross Energy	Rifle Substation (RFL)	Rifle (RFL)		8,844	8,844
Yampa Valley Electric Assoc.	Rifle Substation (RFL)	Rifle (RFL)		5,024	5,024
Intermountain REA	Conifer Substation (PSCO)	Ault (LAP) & Midway (CRSP)	3,303	1,697	5,000
U.S. Air Force Academy	Fuller Substation (FULLER)	Ault (AU)	1,750		1,750
Peterson Air Force Base	Fuller Substation (FULLER)	Ault (AU)	1,691		1,691
Fort Carson Army Base	Fuller Substation (FULLER)	Ault (AU)	1,942		1,942
Cheyenne Mountain Air Force Station	Fuller Substation (FULLER)	Ault (AU)	845		845
Intermountain REA	Daniels Park Substation (PSCO)	Ault (LAP) & Midway (CRSP)	413	212	625
Intermountain REA	Deer Creek Substation (PSCO)	Ault (LAP) & Midway (CRSP)	1,239	637	1,876
Intermountain REA	Palmer Lake Substation (PSCO)	Ault (LAP) & Midway (CRSP)	2,478	1,273	3,751
Intermountain REA	Smoky Hill Substation (PSCO)	Ault (LAP) & Midway (CRSP)	8,259	4,244	12,503
Intermountain REA	Tiny Town Substation (PSCO)	Ault (LAP) & Midway (CRSP)	826	424	1,250
Intermountain REA	Waterton Substation (PSCO)	Ault (LAP) & Midway (CRSP)	4,129	2,122	6,251
Mount Elbert pump no. 1 [4/]	Malta Substation (MALT)	Ault & Midway [7/]	135,000		135,000
Mount Elbert pump no. 2 [4/]	Malta Substation (MALT)	Ault & Midway [7/]	125,000		125,000
Municipal Energy Agency of Nebraska (MEAN) [5/]	Midway Substation	Ault (AU)	25,893		25,893
Black Hills Corporation	Midway Substation	Ault (AU)	4,802		4,802
Colorado Springs	Otero Pumping Station (MALT)	Ault (AU)	9,540		9,540
Silt Pumping Plant	Silt Tap (RFL)			795	795
	Total		329,675	28,421	358,096

	less nightly Mount Elbert pumping	260,000		260,000
	daily maximum load excluding nightly pumping 6/	69,675	28,421	98,096
1/ Normally served by Mount Elbert generation at Malta Substation; the external				
2/ LAP kW will change (except the Mount Elbert pumps nos. 1 and 2) on October 1, 2014.				
3/ Normally served by Upper/Lower Molina generation at Collbran Substation and Morrow Point generation at Hayden/Rifle/Midway; the alternate generation Point Of Receipt for				
these loads is identified in the POR column.				
4/ Mount Elbert pump loads are for nightly pumping only. Energy for pump loads will be sourced from the WA				
5/ Currently under Contract 376, MEAN's delivery is 66,555 kW consisting of the Loveland Area Projects' Contract Rate Of Delivery plus supplemental to Fountain. Fountain's LAP FES				
has been separated into its own line/delivery point as it will no longer be tied to MEAN.				
MEAN has an OASIS request (50 MW PtP) with PSCo, which MEAN would use for its supplemental supply (the balance) to Fountain.				
6/ This gives you an idea of what the daytime load would be.				
7/ 40 MW pump return energy (off-peak) for CSU is delivered to Western at Midway Substation.				

SERVICE AGREEMENT NO. 325-PSCO

Attachment 3
Points of Interconnection

Points of Interconnection for Scheduling NITS Between Western and PSCo		
Point of Interconnection	**POR/POD For Scheduling**	**Location**
Ault Interconnection	Ault (AU)	Where the 230-kV Fort St. Vrain Transmission Line jointly owned by PSCo and Platte River Power Authority is connected to Western's Ault Substation
Beaver Creek Interconnection	Ault (AU)	Where PSCo's 115-kV circuit from PSCo's Beaver Creek Substation is connected to Western's Beaver Creek Substation near Brush, CO
Hayden Interconnection	Hayden (HDN)	Where Western's Hayden Substation is connected to PSCo's 230-kV lines
Malta Interconnection	Malta (MALT)	Where Western's 230-kV Mount Elbert-Malta Transmission Line is connected to PSCo's Malta Substation near Leadville, CO
Midway 115-kV Interconnection	Midway (MIDW)	Where Western's 115-kV bus is connected to PSCo's 115-kV bus at Midway Substation near Colorado Springs, CO
Midway 230-kV Interconnection	Midway (MIDW)	Where Western's 230-kV bus is connected to PSCo's 230-kV terminal bay at Midway Substation near Colorado Springs, CO
Rifle Interconnection	Rifle (RFL)	Where Western's 230-kV main and transfer buses are connected to PSCo's 230-kV main and transfer buses at Rifle Substation near Rifle, CO
Weld No. 1 115-kV Interconnection	Ault (AU)	Where PSCo's 115-kV main and transfer buses are connected to Western's 115-kV main and transfer buses at Weld Substation near Greeley, CO
Weld 230-kV Interconnection	Ault (AU)	Where PSCo's 230-kV bus is connected to Western's 230-kV bus at Weld Substation near Greeley, CO
		Where Western's 115-kV transmission line from Upper and
Collbran Interconnection	Collbran (COLL)	Lower Molina connects to PSCo's Collbran Substation

Service Agreement No. 328-PSCo

328-PSCo TSGT Non-Conforming NOA Version: 0.0.0 Effective: 7/1/2012

NETWORK OPERATING AGREEMENT

BETWEEN

TRI-STATE GENERATION AND TRANSMISSION ASSOCIATION, INC.

AND

PUBLIC SERVICE COMPANY OF COLORADO

Version 0.0.0

DATED: July 24, 2012

Tri-State Contract No. TS-12-0091

Network Operating Agreement

This Network Operating Agreement, dated as of July 24, 2012, is made and entered by and between Public Service Company of Colorado, a Colorado corporation ("Transmission Provider"), and Tri-State Generation and Transmission Association, Inc. ("Network Customer") all of whom may be referred to individually as "Party" or jointly as "Parties".

WHEREAS, The Network Customer has been determined by the Transmission Provider to have a Completed Application for Network Integration Transmission Service under Part III of the Tariff; and

WHEREAS, The terms and conditions under which the Network Customer shall operate its facilities, and the technical and operational matters associated with implementation of Part III of the Tariff are to be specified in this Network Operating Agreement in accordance with Section 35.2 of the Tariff;

NOW THEREFORE, In consideration of the mutual agreements set forth below, the Network Customer and the Transmission Provider agree as follows:

1.0 Purpose of Agreement and General Requirements

By this agreement, the Transmission Provider and Network Customer agree that the provisions of this Network Operating Agreement ("NOA") and the Network Integration Transmission Service Agreement ("Service Agreement") govern the Transmission Provider's provision of Network Integration Transmission Service to the Network Customer in accordance with the Open Access Transmission Tariff ("Tariff"), as it may be amended from time to time. This NOA requires the Parties to: (i) operate and maintain equipment necessary for incorporating the Network Customer within the Transmission Provider's Transmission System including, but not limited to, remote terminal units, metering, communications equipment and relaying equipment; (ii) transfer data including, but not limited to, heat rates, fuel costs, and operational characteristics of on-system Network Resources, generation schedules for on- and off-system Network Resources, interchange schedules, unit outputs for redispatch required under Section 33 of the Tariff, voltage schedules, loss factors and other real time data, between their respective control centers; (iii) use software programs required for data links and constraint dispatching; (iv) exchange data on forecasted loads and resources necessary for planning and operation; and (v) address any other technical and operational considerations required for implementation of the Tariff, including scheduling protocols.

The Network Customer shall: (i) operate under applicable guidelines of the North American Electric Reliability Council ("NERC") and the applicable regional reliability council; (ii) satisfy all applicable Ancillary Services requirements, by contracting with the Transmission Provider; or (iii) satisfy all applicable Ancillary Services and/or Interconnected Operations Services ("IOS") (as defined by NERC), by providing them itself or by contracting with another entity that can satisfy those requirements in a manner that is consistent with Good Utility Practice and satisfies the standards of NERC and the regional reliability council. The Network Customer shall plan, construct, operate and maintain its facilities and Transmission System in accordance with Good Utility Practice, which shall include all applicable guidelines of NERC and the regional reliability council, as they may be modified from time to time and any generally accepted practices in the region that are consistently adhered to by the Transmission Provider.

Unless specified herein, capitalized terms shall refer to terms defined in the Tariff. When the terms Load Responsibility, Regulating Margin, Most Severe Single Contingency ("MSSC"), First Contingency, Spinning Reserves, Supplemental Reserves and Operating Reserves are used in this NOA, the regional reliability council definitions of those terms apply.

The Network Customer acknowledges that the Parties may need to revise this NOA as necessary to incorporate changes to the Transmission Provider's Control Area requirements and the Network Customer shall conform and operate according to the revised NOA.

2.0 Network Operating Committee

(a) Membership - The Network Operating Committee shall be composed of representatives from the Network Customers taking service under the Tariff and the Transmission Provider.

(b) Responsibilities - The Network Operating Committee shall: (1) adopt rules and procedures consistent with this NOA and the Tariff governing operating and technical requirements necessary for implementing the Tariff; (2) review on- and off-system Network Resources, and Network Loads on an annual basis in order to assess the adequacy of the Transmission System; and (3) obtain from the Transmission Provider the Transmission Provider's operating policies, procedures, and guidelines for network interconnection and operation, (4) adopt standards for provision of Ancillary Services and/or IOS, and develop non-compliance procedures and penalties.

(c) Authority - The Network Operating Committee will not have any authority to modify or bypass the Transmission Provider's Open Access Transmission Tariff or the Service Agreements under such Tariff. The Network Operating Committee, through their actions, will ensure that the reliability criteria of NERC and the regional reliability council are met.

3.0 Regulation and Frequency Response

The Network Customer shall meet its proportional share of Regulating Margin by either: (a) purchasing Regulation and Frequency Response Service from the Transmission Provider pursuant to Schedule 3 of the Tariff; or (b) contributing or arranging to have a third party contribute generating resources to meet the Regulating Margin requirement for the current year as follows:

If the Network Customer is located within the PSCo or NSP Control Areas, Network Customer must contribute generating resources in the amount specified in Schedule 3 of the Tariff.

If the Network Customer is located within the SPS Control Area, Customer must contribute generating resources according to the following formula:

$$\text{NCRMR} = \frac{\text{CARM} \times \text{NC maximum demand}}{\text{CA maximum demand}}$$

CA: Control Area
CARM: Control Area Regulating Margin
NC: Network Customer
NCRMR: Network Customer Regulating Margin Requirement

Should the Network Customer's load include major loads not conforming to the general pattern of the control area's load, i.e., arc furnace load, additional Regulating Margin may be required to be provided by the Network Customer.

A Network Customer that meets it proportional share of Regulating Margin by Alternative (b) above shall also meet the requirements of Section 5.0 below.

4.0 Operating Reserve

The Network Customer shall meet its proportional share of Operating Reserve by either: (1) purchasing Operating Reserve Services from the Transmission Provider pursuant to Schedules 5 and 6 of the Tariff; or (2) meeting or arranging to have a third party meet the Operating Reserve requirement. A Network Customer that meets its proportional share of Operating Reserve by alternative (2) above shall also meet the requirements of Section 5.0 below. The Operating Reserve requirement is as specified by the regional reliability council. Inasmuch as the Transmission Provider is obligated to meet these requirements, as they may be modified from time to time, the Network Customer recognizes and agrees that its proportional share of the Operating Reserve requirement may change to reflect such modification.

In order to facilitate the use of Operating Reserve, the Network Customer shall have available from the Transmission Provider, unloaded reserve firm transmission capacity at least equal to that Operating Reserve amount. Such transmission may be loaded with interruptible energy so that, upon interruption of the energy, transmission service is available to replace such energy from the Operating Reserve.

5.0 Requirements to Contribute to System Regulation and Operating Reserve

The Network Customer shall operate its on-system Network Resources in a manner similar to that of the Transmission Provider including following voltage schedules, providing free governor response, meeting power factor requirements at the point of interconnection with the Transmission Provider's system, and such other criteria as may be developed by the Transmission Provider and Network Customer through the Network Operating Committee, or required by the NERC and the regional reliability council. The Network Customer shall pay the cost of modification of Transmission Provider's computer hardware and software to accommodate the Network Customer's contribution to Regulating Margin and Operating Reserve. Any resources used by the Network Customer to meet its proportional share, whether the Network Customer's Network Resources or a third party's generating resources, shall meet the same requirements as the Transmission Provider's generating resources used to meet the Regulating Margin and Operating Reserve requirements, including ramp rate, and governor response, and are subject to random testing, and if applicable, a monthly start-up test.

6.0 Redispatch to Manage Transmission System Constraints

If the Transmission Provider determines that redispatching on-system Network Resources, including reductions in off-system purchases, to relieve an existing or potential transmission system constraint is the most effective way to ensure the reliable operation of the Transmission System, the Transmission Provider will redispatch the Transmission Provider's and the Network Customer's on-system Network Resources on a least-cost basis, without regard to the ownership of such resources. The Transmission Provider will apprise the Network Customer of its redispatch practices and procedures as they may be modified from time to time.

The Network Customer will submit verifiable incremental and decremental cost data for its on-system Network Resources that estimates the cost to the Network Customer of changing the generation output of each of its on-system Network Resources to the Transmission Provider.

These costs will be used, along with similar data for the Transmission Provider's resources, as the basis for least-cost redispatch. The Transmission Provider's grid operation staff will keep this data confidential, including from the Transmission Provider's marketing staff. If the Network Customer experiences changes to its costs, the Network Customer must submit those changes to the Transmission Provider's energy control center. The Transmission Provider will implement least-cost redispatch consistent with its existing contractual obligations and its current practices and procedures for its own resources. The Network Customer is obligated to respond immediately to requests for redispatch from the Transmission Provider's energy control center.

Once redispatch has been implemented, the Transmission Provider will book in a separate account costs incurred by both the Transmission Provider and the Network Customer based on the submitted incremental and decremental costs. The Transmission Provider and the Network Customer will each bear a proportional share of the total redispatch cost based on their then-current Load Ratio Shares. The Transmission Provider will bill or credit the Network Customer's monthly bill as appropriate.

7.0 Maintenance of Facilities

(a) The Network Operating Committee shall establish procedures to coordinate the maintenance schedules of the generating resources and transmission and substation facilities, to the greatest extent practicable, to ensure sufficient transmission resources are available to maintain system reliability and reliability of service. By November 1 of each year, the Network Customer shall provide to the Transmission Provider the maintenance schedules and planned outages of each on-system Network Resource for the next five years. Thirty (30) days in advance of each annually forecasted maintenance outage, the Network Customer shall provide the Transmission Provider confirmation of such outage. Such information shall include, but not be limited to, the expected time the unit will be separated from the system and the time at which the unit is available for (1) parallel operation, (2) loading, and (3) if applicable, to be put on automatic generation control.

(b) The Network Customer shall obtain: (1) concurrence from the Transmission Provider at least 72 hours before beginning any scheduled maintenance of its facilities; and (2) clearance from the Transmission Provider when the Network Customer is ready to begin maintenance on an on-system Network Resource, transmission line, or substation facility under the Service Agreement. As may be reasonably requested by the Transmission Provider, the Network Customer shall use best efforts to notify the Transmission Provider at the time when any unscheduled or forced outages occur and again when such unscheduled or forced outages end. The Network Customer shall use best efforts to notify and coordinate with the Transmission Provider prior to reparalleling the on-system Network Resource, transmission line, or substation under the Service Agreement.

(c) Maintenance schedules will be posted on an electronic bulletin board or communicated via the data link.

8.0 Load Shedding

(a) The Parties shall implement load shedding programs to maintain the reliability and integrity of the Control Area, as provided in Section 33.6 of the Tariff. Load shedding shall include: (1) automatic load shedding: (2) manual load shedding; or (3) rotating interruption of customer load. The Transmission Provider will order load

shedding to maintain the relative sizes of load served, unless otherwise required by circumstances beyond the control of the Transmission Provider or the Network Customer. Automatic load shedding devices will operate without notice. When manual load shedding or rotating interruptions are necessary, the Transmission Provider shall notify the Network Customer's dispatchers or schedulers of the required action and the Network Customer shall comply immediately.

(b) The Network Customer shall, at its own expense, provide, operate, and maintain in service underfrequency load-shedding equipment for applicable loads under the Service Agreement. The Network Customer's equipment shall be: (1) compatible and coordinated with the Transmission Provider's load shedding equipment; and (2) set for the amount of load to be shed with frequency trips and tripping times as coordinated in the regional reliability council. In the event that Transmission Provider modifies the load-shedding system, the Network Customer shall, at its own expense, make changes to the equipment and setting of such equipment, as required. The Network Customer shall test and inspect the load-shedding equipment as may be reasonably requested by the Transmission Provider, or else testing will be performed per the utility's PSMP (Protection System Maintenance Program). Written test reports shall be provided to the Transmission Provider upon request. The Transmission Provider may request a test of the load-shedding equipment with reasonable notice.

9.0 Recognition of Flow of Power and Energy

(a) The Parties recognize that: (1) the Transmission provider's Transmission System is, and will be, directly or indirectly interconnected with transmission systems owned or operated by others; (2) the flow of power and energy between such systems will be controlled by the physical and electrical characteristics of the facilities involved and the manner in which they are operated; and (3) part of the power and energy being delivered under this NOA may flow through such other systems rather than through the facilities of the Transmission Provider. The Network Operating Committee shall, from time to time as necessary, determine methods and take reasonably appropriate action to assure maximum delivery of power and energy at the points of receipt and delivery and at such additional or alternate points of receipt and delivery as may be established by the Parties.

(b) Each Party will at all times cooperate with other interconnected systems in establishing arrangements or mitigation measures to minimize operational impacts on each other's systems.

(c) Each Party recognizes that a Party's proposed new interconnection or modification of an existing interconnection between that Party's system and the system of a third party may cause adverse anticipated effects on the system of the other Party. The Party making such interconnection or modification shall minimize, or otherwise compensate for, adverse operational effects to the Party's system.

10.0 Service Conditions

The Parties recognize that operating and technical problems may arise in the control of the frequency and in the flow of real and reactive power over the interconnected transmission systems. The Network Operating Committee may adopt operating rules and procedures as necessary to assure that, as completely as practical, the delivery and receipt of real and reactive

power and energy hereunder shall be accomplished in a manner that causes the least interference with such interconnected systems.

A Network Customer interconnecting with the Transmission Provider's Transmission System is obligated to follow the same practices and procedures for interconnection and operation that the Transmission Provider uses for its own load and resources.

Where the Network Customer purchases Ancillary Services and/or IOS from third parties, the Network Customer shall have the responsibility to secure contractual arrangements with such third parties that are consistent with the Tariff, this Network Operating Agreement, and any applicable rules and procedures of the Network Operating Committee.

11.0 <u>Data, Information and Reports</u>

(a) The Network Customer shall, upon request, provide the Transmission Provider with such reports and information concerning its network operation as are reasonably necessary to enable the Transmission Provider to operate its Transmission System adequately.

(b) Scheduling: Hourly transactions from outside of the Transmission Provider's Control Area, in whole megawatts, are prescheduled. Hourly transactions and forecasts of generation and load from within the Transmission Provider's Control Area, in megawatts, are prescheduled. Schedules can be changed consistent with the practices in the regional reliability councils.

No later than 4:00 p.m. MPT of each prescheduling day, per applicable guidelines of the North American Electric Reliability Council ("NERC") and the applicable regional reliability council, the Network Customer shall report projected network resource schedules and network load forecasts to the Transmission Provider. Such preschedules and forecasts shall include, as applicable: (i) each import into or export out of the Control Area; (ii) each power purchase and sale from within the Control Area; and (iii) generation from each Network Resource.

(c) Annual Forecast: By January 10 of each year, the Network Customer shall update its load and resource forecast pursuant to Section 29.2 and 31.6 of the Tariff by providing the Transmission Provider with a non-binding typical weekday and typical weekend forecast in a format specified by the Transmission Provider.

(d) Monthly Forecast; Five (5) days before the end of the month, as reasonably requested by the Transmission Provider, the Network Customer shall update the forecast for the following month specifying purchases, generation, maximum demand, total monthly energy, and Operating Reserve Service from the Transmission Provider or third party.

(e) The Network Customer shall telemeter to the Transmission Provider information including but not limited to watts, vars, generator status, generator breaker status, generator terminal voltage and high side transformer voltage, unless otherwise agreed.

(f) The Network Customer shall provide generating resource characteristics to the Transmission Provider as necessary to implement redispatch, and constraint and reserve management.

12.0 Metering

(a) The Network Customer shall have the obligation to install and maintain revenue meters and communication equipment compatible with the Transmission Provider's meter reading system. Revenue quality meters shall be installed at the point of interconnection between the Network Customer's facility and the Transmission Provider's system. The meters shall measure and record both real power (watts) and reactive power (vars) flow in both directions. Meters installed at a point other than the point of delivery shall be adjusted for the appropriate line and/or transformer losses.

(b) The Transmission Provider shall read or retrieve meter data on the first work day after the end of each billing cycle or such other data as may be required to carry out the provision of the Tariff. The Transmission Provider shall process the meter data and determine energy imbalances, accounting, and billing using such meter data.

(c) The meter owner shall test revenue meters for power deliveries at least once a year and within ten (10) business days after a request by the other Party. The other Party will be afforded the opportunity to be present during the meter test. For meters owned by the Transmission Provider or the Network Customer, either Party may request a meter test by calling the other Party's Network Operating Committee representative and the requesting Party shall pay for the cost of the requested test if the meter has been tested within the previous twelve months. The Parties present at the meter test shall estimate the amount of capacity and energy transferred during the meter test. The meter owner shall immediately repair, adjust, or replace any meter or associated equipment found to be defective or inaccurate. An inaccurate meter is one that exceeds two percent (2%) plus or minus, of the calibrated standards.

(d) The Transmission Provider shall adjust the recorded data to compensate for the effect of an inaccurate meter. Such adjustment shall be made for a maximum period of thirty (30) days prior to the date of the test or to the period during which such inaccuracy may be determined to have existed, whichever period is shorter. No adjustment prior to the beginning of the next preceding month shall be made except by agreement of the Parties. Should any meter fail to register, the Transmission Provider shall estimate, from the best information available, the demand created, energy flow, and var flows during the period of the failure. The Transmission Provider shall, as soon as possible, correct the Network Customer's bills affected by the inaccurate meter. That correction, when made, shall constitute full adjustment of any claim arising out of the inaccurate meter for the period of the correction.

13.0 Communications

(a) The Network Customer shall, at its own expense, install and maintain communication links for scheduling. One communication link may be used for data transfer and the other link shall be used for voice communication.

(b) A Network Customer contributing to Regulating Margin and Operating Reserve requirements or securing the requirements from a third party shall, at its own expense, install and maintain telemetry equipment communicating between the generating resource(s) and the Transmission Provider.

14.0 Notice

Any notice or request made to or by either Party regarding this NOA shall be made to the representative of the other Party as indicated in the Service Agreement.

15.0 Term

The term of this NOA shall be concurrent with the term of the Network Customer's Service Agreement for Network Integration Transmission Service as it may be amended from time to time.

16.0 Entire Agreement

The Tariff and the Service Agreement as they are amended from time to time are incorporated herein and made a part hereof. To the extent that a conflict exists between the terms of this NOA and the terms of the Open Access Transmission Tariff, the tariff shall control.

17.0 Assignment

This NOA shall inure to the benefit of and be binding upon the Parties hereto and their respective successors and assigns, but shall not be assigned by either Party without the written consent of the other, except to a successor to all or substantially all of the electric properties and assets of such Party; provided that this NOA may be assigned by either party without notice to the other party under the terms and conditions of a mortgage, deed of trust, or indenture to which such party is or becomes a party in connection with the general financing of its assets or operations.

IN WITNESS WHEREOF, the Parties have caused this Network Operating Agreement to be executed by their respective authorized officials.

Transmission Provider:

By: ***Ian R. Benson*** ***July 24, 2012***
Ian R. Benson Date
Director, Transmission Business Relations
and Asset Management
Xcel Energy Services Inc.
As Agent for Public Service Company of Colorado

Transmission Customer**:**

By: ***Kenneth J. Anderson*** ***July 24, 2012***
Kenneth J. Anderson Date
Executive Vice President
and General Manager
Tri-State Generation and Transmission Association, Inc.

SERVICE AGREEMENT NO. 335-PSCO; Western Agreement No. 13-RMR-2433

Form of Network Operating Agreement

This Network Operating Agreement, dated as of November 26, 2013, is made and entered into by and between Public Service Company of Colorado, a Colorado corporation ("Transmission Provider" or "PSCo"), and Western Area Power Administration ("Network Customer") all of whom may be referred to individually as "Party" or jointly as "Parties."

WHEREAS, The Network Customer has been determined by the Transmission Provider to have a Completed Application for Network Integration Transmission Service under Part III of the Tariff; and

WHEREAS, The terms and conditions under which the Network Customer shall operate its facilities, and the technical and operational matters associated with implementation of Part III of the Tariff are to be specified in this Network Operating Agreement in accordance with Section 35.2 of the Tariff;

NOW THEREFORE, In consideration of the mutual agreements set forth below, the Network Customer and the Transmission Provider agree as follows:

1.0 <u>Purpose of Agreement and General Requirements</u>

By this agreement, the Transmission Provider and Network Customer agree that the provisions of this Network Operating Agreement ("NOA") and the Network Integration Transmission Service Agreement ("Service Agreement") govern the Transmission Provider's provision of Network Integration Transmission Service to the Network Customer in accordance with the Open Access Transmission Tariff ("Tariff"), as it may be amended from time to time. This NOA requires the Parties to: (i) operate and maintain equipment necessary for incorporating the Network Customer within the Transmission Provider's Transmission System including, but not limited to, remote terminal units, metering, communications equipment and relaying equipment; (ii) transfer data including, but not limited to, heat rates, fuel costs, and operational characteristics of Network Resources, generation schedules for Network Resources, interchange schedules, unit outputs for redispatch required under Section 33 of the Tariff, voltage schedules, loss factors and other real time data, between their respective control centers; (iii) use software programs required for data links and constraint dispatching; (iv) exchange data on forecasted loads and resources necessary for planning and operation; and (v) address any other technical and operational considerations required for implementation of the Tariff, including scheduling protocols.

The Network Customer shall: (i) operate as a Control Area under applicable guidelines of the North American Electric Reliability Corporation ("NERC") and the applicable regional reliability council; (ii) satisfy its control area requirements, including the provision of all Ancillary Services, by contracting with the Transmission Provider; or (iii) satisfy its Control Area requirements, including all Ancillary Services and/or Interconnected Operations

Services ("IOS"), by providing them itself or by contracting with another entity that can satisfy those requirements in a manner that is consistent with Good Utility Practice and satisfies the standards of NERC and the regional reliability council. The Network Customer shall plan, construct, operate and maintain its facilities and Transmission System in accordance with Good Utility Practice, which shall include, but not be limited to, all applicable guidelines of NERC and the regional reliability council, as they may be modified from time to time and any generally accepted practices in the region that are consistently adhered to by the Transmission Provider.

Unless specified herein, capitalized terms shall refer to terms defined in the Tariff. When the terms Load Responsibility, Regulating Margin, Most Severe Single Contingency ("MSSC"), First Contingency, Spinning Reserves, Supplemental Reserves and Operating Reserves are used in this NOA, the regional reliability council definitions of those terms apply.

The Network Customer acknowledges that the Transmission Provider may revise this NOA as necessary to incorporate changes to the Transmission Provider's Control Area requirements and the Network Customer shall conform and operate according to the revised NOA.

2.0 Network Operating Committee

(a) Membership - The Network Operating Committee shall be composed of representatives from the Network Customers taking service under the Tariff and the Transmission Provider.

(b) Responsibilities - The Network Operating Committee shall: (1) adopt rules and procedures consistent with this NOA and the Tariff governing operating and technical requirements necessary for implementing the Tariff; (2) review Network Resources and Network Loads on an annual basis in order to assess the adequacy of the Transmission System; and (3) obtain from the Transmission Provider the Transmission Provider's operating policies, procedures, and guidelines for network interconnection and operation, (4) adopt standards for provision of Ancillary Services and/or IOS, and develop non-compliance procedures and penalties.

(c) Authority - The Network Operating Committee will not have any authority to modify or bypass the Transmission Provider's Open Access Transmission Tariff or the Service Agreements under such Tariff. To the extent of the Network Operating Committee's authority to do so, the Network Operating Committee, through their actions, will ensure that the reliability criteria of NERC and the regional reliability council are met.

3.0 Regulation and Frequency Response

The Network Customer shall meet its proportional share of Regulating Margin by either: (a) purchasing Regulation and Frequency Response Service from the Transmission Provider pursuant to Schedule 3 of the Tariff; or (b) contributing or arranging to have a third party contribute generating resources to meet the Regulating Margin requirement for the current year as follows:

If the Network Customer is located within the PSCo or NSP Control Areas, Network Customer must contribute generating resources in the amount specified in Schedule 3 of the Tariff.

If the Network Customer is located within the SPS Control Area, Customer must contribute generating resources according to the following formula:

$$\text{NCRMR} = \frac{\text{CARM} \times \text{NC maximum demand}}{\text{CA maximum demand}}$$

CA: Control Area
CARM: Control Area Regulating Margin
NC: Network Customer
NCRMR: Network Customer Regulating Margin Requirement

Should the Network Customer's load include major loads not conforming to the general pattern of the control area's load, i.e., arc furnace load, additional Regulating Margin may be required to be provided by the Network Customer.

A Network Customer that meets it proportional share of Regulating Margin by alternative (b) above shall also meet the requirements of Section 5.0 below.

4.0 Operating Reserve

The Network Customer shall meet its proportional share of Operating Reserve by either: (1) purchasing Operating Reserve Services from the Transmission Provider pursuant to Schedules 5 and 6 of the Tariff; (2) meeting or arranging to have a third party meet the Operating Reserve requirement; or (3) as a common Reserve Group participant. A Network Customer that meets its proportional share of Operating Reserve by alternative (2) above shall also meet the requirements of Section 5.0 below. The Operating Reserve requirement is as specified by the regional reliability council as implemented by the Transmission Provider. Inasmuch as the Transmission Provider is obligated to meet these requirements, as they may be modified from time to time, the Network Customer recognizes and agrees that its proportional share of the Operating Reserve requirement may change to reflect such modification.

As applicable, in order to facilitate the use of Operating Reserve Service, the Network Customer shall have available unloaded reserve firm transmission capacity at least equal to that Operating Reserve amount. Such transmission may be loaded with interruptible energy so that, upon interruption of the energy, transmission service is available to replace such energy from the Operating Reserve.

5.0 Requirements to Contribute to System Regulation and Operating Reserve

The Network Customer shall operate its generating resources within Transmission Provider's Control Area in a manner similar to that of the Transmission Provider including following voltage schedules, providing free governor response, meeting power factor requirements at the point of interconnection with the Transmission Provider's system, and such other criteria as may be developed by the Transmission Provider, the Network Operating Committee, or required by the NERC and the regional reliability council. The Network Customer shall pay the cost of modification of Transmission Provider's computer hardware and software to accommodate the Network Customer's contribution to

Regulating Margin and Operating Reserve. Any resources used by the Network Customer to meet its proportional share, whether the Network Customer's Network Resources or a third party's generating resources, shall meet the same requirements as the Transmission Provider's generating resources used to meet the Regulating Margin and Operating Reserve requirements, including, but not limited to, automatic generation control capability, ramp rate, and governor response, and are subject to random testing, and if applicable, a monthly start-up test.

6.0 Redispatch to Manage Transmission System Constraints

If the Transmission Provider determines that redispatching Network Customer's Network Resources, including reductions in off-system purchases, to relieve an existing or potential transmission system constraint is the most effective way to ensure the reliable operation of the Transmission System, the Transmission Provider will redispatch the Transmission Provider's and the Network Customer's Network Resources on a least-cost basis, without regard to the ownership of such resources. The Transmission Provider will apprise the Network Customer of its redispatch practices and procedures as they may be modified from time to time.

The Network Customer will submit verifiable incremental and decremental cost data for its Network Resources that estimates the cost to the Network Customer of changing the generation output of each of its Network Resources to the Transmission Provider. These costs will be used, along with similar data for the Transmission Provider's resources, as the basis for least-cost redispatch. The Transmission Provider's grid operation staff will keep this data confidential, including from the Transmission Provider's marketing staff. If the Network Customer experiences changes to its costs, the Network Customer must submit those changes to the Transmission Provider's energy control center. The Transmission Provider will implement least-cost redispatch consistent with its existing contractual obligations and its current practices and procedures for its own resources. The Network Customer is obligated to respond immediately to requests for redispatch from the Transmission Provider's energy control center.

Once redispatch has been implemented, the Transmission Provider will book in a separate account costs incurred by both the Transmission Provider and the Network Customer based on the submitted incremental and decremental costs. The Transmission Provider and the Network Customer will each bear a proportional share of the total redispatch cost based on their then-current Load Ratio Shares. The Transmission Provider will bill or credit the Network Customer's monthly bill as appropriate.

The following facilities are not applicable to this Section 6.0 due to their ineffective nature of providing constraint relief on the Transmission Provider's system. If operating experience proves otherwise, this NOA will be revised to reflect changed conditions:

Mount Elbert Units 1 & 2
Upper Molina
Lower Molina
Morrow Point
Flatiron Units 1 & 2
Yellowtail Units 1 & 2

7.0 Maintenance of Facilities

(a) The Network Operating Committee shall establish procedures to coordinate the maintenance schedules of the generating resources and transmission and substation facilities, to the greatest extent practicable, to ensure sufficient transmission resources are available to maintain system reliability and reliability of service. By November 1 of each year, the Network Customer shall provide to the Transmission Provider the maintenance schedules and planned outages of each Network Resource within the Transmission Provider's Control Area for the next five years. Thirty (30) days in advance of each annually forecasted maintenance outage, the Network Customer shall provide the Transmission Provider confirmation of such outage. Such information shall include, but not be limited to, the expected time the unit will be separated from the system and the time at which the unit is available for (1) parallel operation, (2) loading, and (3) if applicable, to be put on automatic generation control.

(b) The Network Customer shall obtain: (1) concurrence from the Transmission Provider at least 72 hours before beginning any scheduled maintenance of its facilities within the Transmission Provider's Control Area; and (2) clearance from the Transmission Provider when the Network Customer is ready to begin maintenance on a Network Resource, transmission line, or substation within the Transmission Provider's Control Area. The Network Customer shall immediately notify the Transmission Provider at the time when any unscheduled or forced outages occur and again when such unscheduled or forced outages end. The Network Customer shall notify and coordinate with the Transmission Provider prior to reparalleling the Network Resource, transmission line, or substation.

(c) Maintenance schedules will be posted on an electronic bulletin board or communicated via the data link.

8.0 <u>Load Shedding</u>

(a) The Parties shall implement load shedding programs to maintain the reliability and integrity of the Control Area, as provided in Section 33.6 of the Tariff. Load shedding shall include: (1) automatic load shedding: (2) manual load shedding; or (3) rotating interruption of customer load. The Transmission Provider will order load shedding to maintain the relative sizes of load served, unless otherwise required by circumstances beyond the control of the Transmission Provider or the Network Customer. Automatic load shedding devices will operate without notice. When manual load shedding or rotating interruptions are necessary, the Transmission Provider shall notify the Network Customer's dispatchers or schedulers of the required action and the Network Customer shall comply immediately.

(b) Where applicable, the Network Customer shall, at its own expense, provide, operate, and maintain in service underfrequency load-shedding equipment. The Network Customer's equipment shall be: (1) compatible and coordinated with the Transmission Provider's load shedding equipment; and (2) set for the amount of load to be shed with frequency trips and tripping times as coordinated in the regional reliability council. In the event that Transmission Provider modifies the load-shedding system, the Network Customer shall, at its own expense, make changes to the equipment and setting of such equipment, as required. The Network Customer shall test and inspect the load-shedding equipment within ninety (90) days of taking Network Integration Transmission Service under the Tariff and

at least once each year thereafter, and provide a written report to the Transmission Provider. The Transmission Provider may request a test of the load-shedding equipment with reasonable notice.

9.0 Recognition of Flow of Power and Energy

(a) The Parties recognize that: (1) the Transmission Provider's Transmission System is, and will be, directly or indirectly interconnected with transmission systems owned or operated by others, including the Network Customer's systems; (2) the flow of power and energy between such systems will be controlled by the physical and electrical characteristics of the facilities involved and the manner in which they are operated; and (3) part of the power and energy being delivered under this NOA may flow through such other systems rather than through the facilities of the Transmission Provider. The Network Operating Committee shall, from time to time as necessary, determine methods and take reasonably appropriate action to assure maximum delivery of power and energy at the points of receipt and delivery and at such additional or alternate points of receipt and delivery as may be established by the Parties.

(b) Each Party will at all times cooperate with other interconnected systems in establishing arrangements or mitigation measures to minimize operational impacts on each other's systems.

(c) Each Party recognizes that a Party's proposed new interconnection or modification of an existing interconnection between that Party's system and the system of a third party, may cause adverse anticipated effects on the system of the other Party. The Party making such interconnection or modification shall minimize, or otherwise compensate for, adverse operational effects to the Party's system.

10.0 Service Conditions

The Parties recognize that operating and technical problems may arise in the control of the frequency and in the flow of real and reactive power over the interconnected transmission systems. The Network Operating Committee may adopt operating rules and procedures as necessary to assure that, as completely as practical, the delivery and receipt of real and reactive power and energy hereunder shall be accomplished in a manner that causes the least interference with such interconnected systems.

A Network Customer interconnecting with the Transmission Provider's Transmission System is obligated to follow the same practices and procedures for interconnection and operation that the Transmission Provider uses for its own load and resources.

Where the Network Customer purchases Ancillary Services and/or IOS from third parties, the Network Customer shall have the responsibility to secure contractual arrangements with such third parties that are consistent with the Tariff, this Network Operating Agreement, and any applicable rules and procedures of the Network Operating Committee.

Transmission Provider and Network Customer are each a Registered Entity with the WECC. Network Customer shall be responsible for compliance with all NERC and WECC mandatory Reliability Standards applicable to Network Customer's facilities, and Transmission Provider shall be responsible for compliance with all NERC and WECC mandatory Reliability Standards applicable to Transmission Provider's facilities. Each

Party shall be responsible for the costs of compliance with NERC and WECC Reliability Standards for the respective facilities they own, including (i) costs associated with modifying a Party's respective facilities or systems for that Party to comply with changes in such Reliability Standards, and (ii) financial penalties for that Party's non-compliance, if such financial penalties are allowed by law. The Parties agree to share data or documentation as may be required to demonstrate compliance with Reliability Standards where an individual Party has possession of data or documentation necessary for the other Party to demonstrate compliance.

11.0 <u>Data, Information and Reports</u>

(a) The Network Customer shall, upon request, provide the Transmission Provider with such reports and information concerning its network operation within the Transmission Provider's Control Area as are reasonably necessary to enable the Transmission Provider to operate its Transmission System adequately.

(b) Scheduling: Hourly transactions from outside of the Transmission Provider's Control Area, in whole megawatts, are prescheduled. Hourly transactions and forecasts of generation and load from within the Transmission Provider's Control Area, in megawatts, are prescheduled. Schedules can be changed consistent with the practices in the regional reliability councils.

The Network Customer shall notify the Transmission Provider of intended imports into the Control Area for the next normal business day(s) per applicable guidelines of the NERC and the applicable regional reliability council. Each normal business day, the Network Customer shall finalize import preschedules by voice and transmit all the preschedules and forecasts in a format and using a method specified by the Transmission Provider. The Network Customer shall update the preschedules and forecasts before 10 p.m. the evening preceding the schedule's effective date. Such preschedules and forecasts shall include, as applicable: (i) each import into or export out of the Control Area; (ii) each power purchase and sale from within the Control Area; (iii) losses; (iv) generation from each Network Resource; (v) Network Load at each point designated in Section 4.0 of the Specifications for Network Integration Transmission Service attached to the Service Agreement; (vi) Regulating Margin; (vii) Spinning and Supplemental Reserve from each Network Resource; (viii) Spinning and Supplemental Reserve purchased from the Transmission Provider or each third party; (ix) the Network Customer's MSSC; (x) available capacity from each Network Resource; (xi) transmission service associated with each preschedule and forecast; (xii) incremental and decremental cost data for Network Resources; and (xiii) other information, as required by the Transmission Provider.

(c) Annual Forecast: By January 10 of each year, the Network Customer shall update its load and resource forecast pursuant to Section 29.2 and 31.6 of the Tariff by providing the Transmission Provider with a non-binding typical weekday and typical weekend forecast in a format specified by the Transmission Provider.

(d) Monthly Forecast: Five (5) days before the end of the month, the Network Customer shall update the forecast for the following month specifying purchases, generation, maximum demand, total monthly energy, and Operating Reserve Service from the Transmission Provider or third party.

(e) The Network Customer shall telemeter to the Transmission Provider information including but not limited to watts, vars, generator status, generator breaker status, generator terminal voltage and high side transformer voltage, unless otherwise agreed.

(f) The Network Customer shall provide generating resource characteristics to the Transmission Provider as necessary to implement redispatch, and constraint and reserve management.

12.0 <u>Metering</u>

(a) As applicable, the Network Customer shall have the obligation to install and maintain revenue meters and communication equipment compatible with the Transmission Provider's meter reading system. Revenue quality meters shall be installed at the point of interconnection between the Network Customer's facility and the Transmission Provider's system. The meters shall measure and record both real power (watts) and reactive power (vars) flow in both directions. Meters installed at a point other than the point of delivery shall be adjusted for the appropriate line and/or transformer losses.

(b) The Transmission Provider shall read or retrieve meter data on the first work day after the end of each billing cycle or such other data as may be required to carry out the provision of the Tariff. The Transmission Provider shall process the meter data and determine energy imbalances, accounting, and billing using such meter data, and pursuant to the Service Agreement.

(c) The meter owner shall test revenue meters for power deliveries according to the meter owner's metering policy and within ten (10) business days after a request by the other Party. The other Party will be afforded the opportunity to be present during the meter test. For meters owned by the Transmission Provider, the Network Customer may request a meter test by calling the Transmission Provider's Network Operating Committee representative and shall pay for the cost of the requested test if the meter has been tested within the previous twelve months. The Parties present at the meter test shall estimate the amount of capacity and energy transferred during the meter test. The meter owner shall immediately repair, adjust, or replace any meter or associated equipment found to be defective or inaccurate. An inaccurate meter is one that exceeds two percent (2%) plus or minus, of the calibrated standards.

(d) The Transmission Provider shall adjust the recorded data to compensate for the effect of an inaccurate meter. Such adjustment shall be made for a maximum period of thirty (30) days prior to the date of the test or to the period during which such inaccuracy may be determined to have existed, whichever period is shorter. No adjustment prior to the beginning of the next preceding month shall be made except by agreement of the Parties. Should any meter fail to register, the Transmission Provider shall estimate, from the best information available, the demand created, energy flow, and var flows during the period of the failure. The Transmission Provider shall, as soon as possible, correct the Network Customer's bills affected by the inaccurate meter. That correction, when made, shall constitute

full adjustment of any claim arising out of the inaccurate meter for the period of the correction.

13.0 Communications

(a) The Network Customer shall, at its own expense, install and maintain communication links for scheduling. One communication link may be used for data transfer and the other link shall be used for voice communication.

(b) A Network Customer contributing to Regulating Margin and Operating Reserve requirements or securing the requirements from a third party shall, at its own expense, install and maintain telemetry equipment communicating between the generating resource(s) and the Transmission Provider.

14.0 Notice

Any notice or request made to or by either Party regarding this NOA shall be made to the representative of the other Party as indicated in the Service Agreement.

15.0 Term

The term of this NOA shall be concurrent with the term of the Network Customer's Service Agreement for Network Integration Transmission Service as it may be amended from time to time.

16.0 Entire Agreement

The Tariff and the Service Agreement as they are amended from time to time are incorporated herein and made a part hereof. Except as separately negotiated under the Service Agreement and this NOA, and/or to the extent permitted by Federal law, when a conflict exists between the terms of this NOA and the terms of the Open Access Transmission Tariff, the Tariff shall control.

17.0 Assignment

This NOA shall inure to the benefit of and be binding upon the Parties hereto and their respective successors and assigns, but shall not be assigned by either Party without the written consent of the other, except to a successor to all or substantially all of the electric properties and assets of such Party.

IN WITNESS WHEREOF, the Parties have caused this Network Operating Agreement to be executed by their respective authorized officials.

Transmission Provider:

By: /s/ *Ian R. Benson* 11/26/13
Ian R. Benson Date
Director, Transmission Planning & Business Relations
Xcel Energy Services Inc.
As Agent for Public Service Company of Colorado

Transmission Customer:

By: /s/ *David Neumayer* November 22, 2013
David Neumayer Date
Power Marketing Manager
Western Area Power Administration

ATTACHMENT CC

Service Agreements For Generation Interconnection Service

ATTACHMENT DD

Service Agreements For Balancing Authority Ancillary Service

Service Agreement No. 409-PSCo

TSGT-Non-Conforming BASA Agrmt Version: 0.0.0 Effective: 12/1/2015

Amended and Restated Service Agreement For Balancing Authority Ancillary Services

BETWEEN

PUBLIC SERVICE COMPANY OF COLORADO

AND

TRI-STATE GENERATION AND TRANSMISSION ASSOCIATION, INC.

Dated: December 1, 2015

(Supersedes 229-PSCo, previously effective October 1, 2014)

Version 0.0.0

Amended and Restated Service Agreement For Balancing Authority Ancillary Services Applicable to the Public Service Company of Colorado (PSCo) System

1.0 This Amended and Restated Balancing Authority Ancillary Services Agreement ("A&R Agreement") is entered into as of the date provided in Section 4 below by and between Public Service Company of Colorado ("Service Provider" or "BA Operator"), and Tri-State Generation and Transmission Association, Inc. ("Ancillary Services Customer"), each of whom may be referred to individually as "Party" or jointly as "Parties".

2.0 Service Provider has established Part IV to its Open Access Transmission Tariff (Tariff) to provide Balancing Authority Services to ancillary service customers located within Service Provider's Balancing Authority Area. Service Provider has determined that the Ancillary Service Customer is subject to certain ancillary services and requirements due to the presence of its generation or loads in the Service Provider's Balancing Authority Area. The Ancillary Service Customer, in turn, acknowledges that it is subject to the attached Specifications for Balancing Authority Area Ancillary Services, as applicable.

3.0 The Ancillary Service Customer agrees to supply to the BA Operator information reasonably necessary in accordance with Good Utility Practice, as defined in the Tariff, applicable North American Electric Reliability Corporation (NERC) or Western Electricity Coordinating Council (WECC) reliability standards, and Part IV of the Tariff.

4.0 This A&R Agreement (Ancillary Services Customer Contract No. TS-15-0019), which is effective December 1 , 2015, supersedes and replaces that certain Service Agreement for Balancing Authority Ancillary Services dated October 1, 2014 (Service Provider's Service Agreement 229-PSCo, version 0.0.0, Ancillary Services Customer Contract No. TS-13-0250), and shall remain in effect for an initial term of one (1) year. Thereafter, the term of this A&R Agreement shall automatically renew and remain in full force and effect for additional one-year terms unless terminated by written notice from either Party. Either Party may terminate specific services provided under the A&R Agreement upon delivery of a written notice to the other Party, at any time by demonstrating that the Ancillary Service Customer is self-supplying the service or is no longer taking such service from the Service Provider. The Parties' obligations with respect to such matters as the final settlement of accounts, shall survive the termination of this A&R Agreement.

5.0 The Service Provider agrees to provide and the Ancillary Service Customer agrees to take and pay for Balancing Authority services detailed in Attachment 1 in accordance with the Tariff and this A&R Agreement. This A&R Agreement in no way obligates Service Provider to provide any other Tariff service to the Ancillary Service Customer. The Ancillary Service Customer may request such other services under the Tariff, and will be subject to the Tariff for such other services.

6.0 Service Provider's Tariff, including the Tariff's applicable Ancillary Service provisions and associated Schedules, as presently constituted or as they may be revised or superseded,

is made a part of this A&R Agreement, as applicable. Any conflicts between the terms and conditions of this A&R Agreement and the Tariff shall be resolved in favor of this A&R Agreement.

7.0 Service Provider may unilaterally revise charges set forth under this A&R Agreement pursuant to applicable Federal laws, regulations and policies upon applicable written notice to the Ancillary Service Customer.

8.0 Any notice or request made to or by either Party regarding this A&R Agreement, shall be made to the representative of the other Party as indicated below:

Service Provider:

Manager, Transmission Business Relations
612-330-6773 or 1-800-328-8226 ext. 0

Ancillary Services Customer:

Tri-State Generation and Transmission Association, Inc.
Attn: Senior Vice President, Energy Management
First Class Regular Mail: P.O. Box 33695
Denver, Colorado 80233

Commercial Courier/Overnight Service:
3761 Eureka Way
Frederick, Colorado 80516

With a copy to:
Tri-State Generation and Transmission Association, Inc.
Attn: Senior Manager, Energy Resources
First Class Regular Mail: P.O. Box 33695
Denver, Colorado 80233

Commercial Courier/Overnight Service:
3761 Eureka Way
Frederick, Colorado 80516

Telephone: 303-452-6111
Facsimile: 303-254-6007

9.0 This A&R Agreement may be executed in counterparts, each of which shall be deemed to be an original and all of which shall constitute one and the same document.

IN WITNESS WHEREOF, the Parties have caused this A&R Agreement to be executed by their respective authorized representatives.

Service Provider:

By: /s/ Ian R. Benson
Ian R. Benson

Director, Transmission
Planning and Business Relations
Xcel Energy Services Inc.
Authorized Agent for Public
Service Company of Colorado

12/1/15
Date

Ancillary Services Customer:

By: /s/ Michael S. McInnes

11/13/15

Micheal S. McInnes

Chief Executive Officer Date

Tri-State Generation and

Transmission Association, Inc.

Attachment No. 1

Specification of Balancing Authority Services and Requirements

1.0 Term of Transaction: Initial term of one (1) year, and shall thereafter roll-over from year-to-year unless terminated by written notice pursuant to this A&R Agreement.

Start Date: The Effective Date of this A&R Agreement; provided however Ancillary Services Customer agrees to pay Service Provider the entire amount owing for Balancing Authority Services in connection with the designated meters listed in Article 4.0 of this Attachment No. 1 that has accrued since October 1, 2014 and for the balance of the term of this A&R Agreement so long as such meters are identified in Article 4.0 of this Attachment No. 1. Should the amount owed be that of the Service Provider to the Ancillary Services Customer, Service Provider agrees to pay Ancillary Services Customer the entire amount owing in the form of a credit for Balancing Authority Services in connection with the designated meters listed in Article 4.0 of this Attachment No. 1 that has accrued since October 1, 2014 through the Effective Date of this A&R Agreement. Provided further, Ancillary Services Customer agrees to pay Service Provider the entire amount owing for Balancing Authority Services in connection with the Carey Metering Point that has accrued since July 1, 2013 and for the balance of the term of this A&R Agreement so long as the Carey Metering Point is subject to this A&R Agreement. Ancillary Services Customer shall pay Service Provider for ancillary services provided, including Balancing Authority Services, in connection with the balance of the meters set forth hereunder.

2.0 Except as provided in Section 4 of the A&R Agreement, specification of the ancillary services and requirements herein does not supersede any other agreement(s) entered into by the Parties. Check items that apply:

■ Scheduling, System Control, and Dispatch Service: Schedule 1.

■ Reactive Supply and Voltage Control Service: Schedule 2.

■ Regulation and Frequency Response Service: Schedule 3.

■ Energy Imbalance Service: Service Provider Schedule 4.
The provision of Energy Imbalance Service will become effective July 1, 2011

□ Operating Reserves – Spinning Reserve Service: Schedule 5.

□ Operating Reserves – Supplemental Reserve Service: Schedule 6.

□ Generator Imbalance Service: Schedule 9.

☐ Flex Reserve Service: Schedule 16.

□ Real Power Losses.

3.0 Ancillary Services Customer will indicate the ancillary service(s) that shall be self-provided and a brief description of the method(s) used for self-provision. Check items that apply:

□ Reactive Supply and Voltage Control Service: Schedule 2.

Description: Self provision subject to Attachment 2 - Self Provision Test for Schedule 2; Reactive Supply and Voltage Control

□ Regulation and Frequency Response Service: Schedule 3.
Description:

□ Energy Imbalance Service: Schedule 4.
Description:

■ Operating Reserves – Spinning Reserve Service: Schedule 5.
Description: Rocky Mountain Reserve Group

■ Operating Reserves – Supplemental Reserve Service: Schedule 6.
Description: Rocky Mountain Reserve Group

□ Generator Imbalance Service: Rate Schedule 9.

Description

☐ Flex Reserve Service: Schedule 16.

■ Real Power Losses.
Description:

4.0 Designated Meters

The Ancillary Service Customer will be charged monthly for ancillary services based on the items checked above. The Ancillary Service Customer's billing demand for Schedules 1, 2, and 3 for such month, and/or the hourly imbalance quantity under Schedule 4 for such month, will be based on the recorded values on the following meter(s) or other mutually agreed upon method as specified in this A&R Agreement.

MV90 METER Description	**Meter kV**	**Notes**
Bromley 1 & 2	24.9	TSGT Meters; served via Henry Lake to Bromley 115kV Line [TSGT IEE Meter Name: BROMLEY_T1; BROMLEY_T2]
Carey	12.5	PRPA Meter; Tap on 230kV Ault-Timberline Line [TSGT IEE Meter Name: CAREY_PRPA]
Prairie Center T2	13.2	TSGT Meter; Henry Lake-Reunion Line [TSGT IEE Meter Name: PRAIRIE_CTR_T2]
Reunion T1	115	TSGT Meter; Henry Lake-Reunion Line [TSGT IEE Meter Name: REUNION_T1]
Reunion T2	13.2	TSGT Meter; Henry Lake-Reunion Line [TSGT IEE Meter Name: REUNION_T2]
TSSEL		TSGT Meters; served via TSGT 230 kV from Henry Lake [TSGT IEE Meter Name: BROMLEY_T1, BROMLEY_T2]
Carmel T1 & T2	12.5	TSGT Meter; tap off of the 115 kV line between Waverly and Plaza [TSGT IEE Meter Name: CARMEL_T1, Carmel_T2]
Hooper Solar Station Service	230	TSGT Meter; [TSGT IEE Meter Name: SLVEAST_HOOPER]
Iberdrola SS	115	TSGT Meter;

		[TSGT IEE Meter Name: SAN_LUIS_IBER]
Plaza	69	TSGT Meter; tap off of the 115 kV line between San Luis and Ramon [TSGT IEE Meter Name: PLAZA]
Ramon	69	TSGT Meter; 115 kV San Luis-Ramon Line [TSGT IEE Meter Name: RAMON]
San Luis	69	TSGT Meter; San Luis-Hooper Tap [TSGT IEE Meter Name: SAN_LUIS_69]
Stanley	115	TSGT Meter; tap off of the 115 kV line between San Luis and Waverly [TSGT IEE Meter Name: STANLEY]
Waverly	115	TSGT Meter; 115 kV San Luis-Waverly Line [TSGT IEE Meter Name: WAVERLY]
Zinzer	12.5	TSGT Meter; located between Plaza and Waverly [TSGT IEE Meter Name: ZINZER]

TSMSEL

La Junta T1 La Junta T2	115	TSGT Meter; T1: Only normally a backup meter to La Junta T2 (T1 is only a hot spare) (Channel 2 Load (Add); Channel 3 Generation (Subtract)) [TSGT IEE Meter Name: LAJUNTA] TSGT Meter; T2 (Channel 2 Load (Add); Channel 3 Generation (Subtract)) [TSGT IEE Meter Name: LAJUNTA_T2]
City of La Junta (ARPA)	69	City of La Junta (ARPA) deducted from TSGT's SECPA load on La Junta T2 (Channel 2 Load (Subtract); Channel 3 Generation (Add)) [TSGT IEE Meter Name: LAJUNTA_CITY]
CO Green 230	230	Colorado Green Windfarm Station Service [TSGT IEE Meter Name: CG_WINDFARM]
Vilas	69	TSGT Meter; SECPA 69 kV system [TSGT IEE Meter Name: VILAS]
City of Springfield (ARPA)	69	TSGT Meter; City of Springfield (ARPA) load is deducted from TSGT's SECPA load at Vilas (Channel 2 Load (Subtract); Channel 3 Generation (Add)) [TSGT IEE Meter Name: SPRINGFIELD]
Willow Creek T1	115	TSGT Meter; T1; 69 KV buss serving line to City of Lamar (ARPA) and SECPA's 69 kV system

		(Channel 2 Load (Add); Channel 3 Generation (Subtract)) [TSGT IEE Meter Name: WILLOW_CREEK]
Willow Creek T2	115	TSGT Meter; T2; 69 kV bus serving line to City of Lamar (ARPA) and SECPA's 69 kV system (Channel 2 Load (Add); Channel 3 Generation (Subtract)) [TSGT IEE Meter Name: WILLOW_CREEK_2]
City of Lamar (ARPA)	69	TSGT Meter; City of Lamar (ARPA) load is deducted from TSGT's SECPA load at Willow Creek 69 kV bus (Willow Creek T1 & Willow Creek T2) (Channel 2 Load (Add); Channel 3 Generation (Subtract)) [TSGT IEE Meter Name: LAMAR_SECPA]
City of Lamar (ARPA) – (Alternative service to SECPA (Eads & Prowers))	69	TSGT Meter; Meters ARPA 69 kV line to SECPA's Eads and Prowers loads as alternative Service when SECPA's 69 kV line from Willow Creek is out of service (Channel 2 Load (Add); Channel 3 Generation (Subtract)) [TSGT IEE Meter Name: LAMAR_PROWERS]

ATTACHMENT EE

Reserved For Future Use

ATTACHMENT FF

Service Agreements For Transmission to Load Interconnection Service

NOTICE OF CANCELLATION

541-NSP MDEU-Trans to Load Intercon Svc Version: 0.3.0 Effective: 9/1/2014

Service Agreement No. 541-NSP

Service Agreement for Transmission to Load Interconnection Service

Between

Northern States Power Company, a Minnesota corporation,

Northern States Power Company, a Wisconsin corporation

and

City of Medford, a Wisconsin Municipal corporation

Dated as of January 1, 2013

542-NSP BNGR-Trans to Load Intercon Svc Version: 0.3.0 Effective: 9/1/2014

NOTICE OF CANCELLATION

Service Agreement No. 542-NSP

542-NSP BNGR-Trans to Load Intercon Svc Version: 0.3.0 Effective: 9/1/2014

Service Agreement for Transmission to Load Interconnection Service

Between

Northern States Power Company, a Minnesota corporation,

Northern States Power Company, a Wisconsin corporation

and

Village of Bangor, a Wisconsin Municipal corporation

Dated as of January 1, 2013

543-NSP BARRON-Trans to Load Intercon Svc Version: 0.2.0 Effective: 9/1/2014

NOTICE OF CANCELLATION

543-NSP BARRON-Trans to Load Intercon Svc Version: 0.2.0 Effective: 9/1/2014

Service Agreement No. 543-NSP

Service Agreement for Transmission to Load Interconnection Service

Between

Northern States Power Company, a Minnesota corporation,

Northern States Power Company, a Wisconsin corporation

and

City of Barron, a Wisconsin Municipal corporation

Dated as of January 1, 2013

NOTICE OF CANCELLATION

Service Agreement No. 544-NSP

544-NSP BLMR-Trans to Load Intercon Svc Version: 0.2.0 Effective: 9/1/2014

Service Agreement for Transmission to Load Interconnection Service

Between

Northern States Power Company, a Minnesota corporation,

Northern States Power Company, a Wisconsin corporation

and

City of Bloomer, a Wisconsin municipal corporation

Dated as of January 1, 2013

NOTICE OF CANCELLATION

Service Agreement No. 545-NSP

545-NSP CDTT-Trans to Load Intercon Svc Version: 0.2.0 Effective: 9/1/2014

Service Agreement for Transmission to Load Interconnection Service

Between

Northern States Power Company, a Minnesota corporation,

Northern States Power Company, a Wisconsin corporation

and

Village Of Cadott, a Wisconsin Municipal Corporation

Dated as of January 1, 2013

546-NSP CRNLL-Trans to Load Intercon Svc Version: 0.2.0 Effective: 9/1/2014

NOTICE OF CANCELLATION

Service Agreement No. 546-NSP

546-NSP CRNLL-Trans to Load Intercon Svc Version: 0.2.0 Effective: 9/1/2014

Service Agreement for Transmission to Load Interconnection Service

Between

Northern States Power Company, a Minnesota corporation,

Northern States Power Company, a Wisconsin corporation

and

City of Cornell, a Wisconsin Municipal corporation

Dated as of January 1, 2013

547-NSP RCLK-Trans to Load Intercon Svc Version: 0.2.0 Effective: 9/1/2014

NOTICE OF CANCELLATION

Service Agreement No. 547-NSP

547-NSP RCLK-Trans to Load Intercon Svc Version: 0.2.0 Effective: 9/1/2014

Service Agreement for Transmission to Load Interconnection Service

Between

Northern States Power Company, a Minnesota corporation,

Northern States Power Company, a Wisconsin corporation

and

City of Rice Lake, a Wisconsin Municipal Corporation

Dated as of January 1, 2013

548-NSP SPOON-Trans to Load Intercon Svc Version: 0.3.0 Effective: 6/13/2013

Service Agreement No. 548-NSP

Notice of Cancellation

548-NSP SPOON-Trans to Load Intercon Svc Version: 0.3.0 Effective: 6/13/2013

Service Agreement for Transmission to Load Interconnection Service

Between

Northern States Power Company, a Minnesota corporation,

Northern States Power Company, a Wisconsin corporation

and

City of Spooner, a Wisconsin municipal corporation

Dated as of January 1, 2013

549-NSP TREMPLO-Trans to Load Intercon Svc Version: 0.2.0 Effective: 9/1/2014

NOTICE OF CANCELLATION

Service Agreement No. 549-NSP

549-NSP TREMPLO-Trans to Load Intercon Svc Version: 0.2.0 Effective: 9/1/2014

Service Agreement for Transmission to Load Interconnection Service

Between

Northern States Power Company, a Minnesota corporation,

Northern States Power Company, a Wisconsin corporation

and

Village of Trempealeau, a Wisconsin Municipal corporation

Dated as of January 1, 2013

550-NSP WKFLD-Trans to Load Intercon Svc Version: 0.3.0 Effective: 9/1/2014

NOTICE OF CANCELLATION

550-NSP WKFLD-Trans to Load Intercon Svc Version: 0.3.0 Effective: 9/1/2014

Service Agreement No. 550-NSP

Service Agreement for Transmission to Load Interconnection Service

Between

Northern States Power Company, a Minnesota corporation,

Northern States Power Company, a Wisconsin corporation

and

City of Wakefield, a Michigan Municipal Corporation

Dated as of January 1, 2013

584-NSP KSTA-Trans to Load Intercon Svc Version: 0.0.0 Effective: 1/1/2015

Service Agreement for Transmission to Load Interconnection Service

Between

Northern States Power Company, a Minnesota corporation,

Northern States Power Company, a Wisconsin corporation

and

City of Kasota, a Minnesota municipal corporation

Dated as of January 9, 2015

VERSION 0.0.0.

TABLE OF CONTENTS

ARTICLE I DEFINITIONS 890

Section 1.01 Rules of Construction 890
Section 1.02 Good Faith and Fair Dealing 890
Section 1.03 General Provisions 890
Section 1.04 Definitions 891

ARTICLE II SCOPE 894

Section 2.01 Scope of Interconnection Agreement 894
Section 2.02 Facilities Served 895

ARTICLE III TERMS AND TERMINATION 895

Section 3.01 Term 895
Section 3.02 Early Termination 895
Section 3.03 Survival 896

ARTICLE IV OWNERSHIP, CONSTRUCTION, OPERATION AND MAINTENANCE 896

Section 4.01 Summary Description 896
Section 4.02 Interconnection Customer Interconnection Facilities and System Protection Facilities 896
Section 4.03 Transmission Provider Interconnection Facilities 896
Section 4.04 Network Upgrades 897
Section 4.05 Modifications to Interconnection Facilities 897
Section 4.07 Construction 898
Section 4.08 Reliability Standards 898
Section 4.09 Interconnection Guidelines 899
Section 4.10 Power Factor 899
Section 4.11 Meter Data Management 900
Section 4.12 Access 900
Section 4.13 Right of Installation 900
Section 4.14 Right of Removal 900
Section 4.15 Transfer of Control or Sale of Facilities 900

ARTICLE V OUTAGES AND COORDINATION 900

Section 5.01 Disconnection 900
Section 5.02 Outages 901
Section 5.03 Outage Reporting 901
Section 5.04 Switching and Tagging Rules 902
Section 5.05 Coordination 902
Section 5.06 Emergency 903

ARTICLE VI SAFETY 903

Section 6.01 Safety Standards 904

ARTICLE VII ENVIRONMENTAL CONSIDERATIONS 904

Section 7.01 Environmental Considerations 904

ARTICLE VIII FORCE MAJEURE 904

Section 8.01 Effect of Declaring Force Majeure 904

Section 8.02 Procedures for Declaring Force Majeure 904

ARTICLE IX BILLING AND PAYMENT 905

Section 9.01 Billing Procedure 20
Section 9.02 Interest on Unpaid Balance 20
Section 9.03 Billing Disputes 905

ARTICLE X NOTICES 905

Section 10.01 Notices 905

ARTICLE XI REGULATION AND MODIFICATION OF RATES 905

Section 11.01 Regulation 905
Section 11.02 Modification 906

ARTICLE XII ASSIGNMENT 906

Section 12.01 Successors and Assigns 906
Section 12.02 Assignment Restrictions 906

ARTICLE XIII INSURANCE 906

Section 13.01 Applicability 906
Section 13.02 Insurance 906

ARTICLE XIV CONSEQUENTIAL DAMAGES, INDEMNITY AND RISK OF LOSS 908

Section 14.01 Waiver of Consequential Damages 908
Section 14.02 Indemnity 908
Section 14.03 Risk of Loss 909

ARTICLE XV DEFAULT AND TERMINATION 909

Section 15.01 Default by Interconnection Customer 909
Section 15.02 Default by Transmission Provider 910
Section 15.03 Termination for Default 910

ARTICLE XVI DISPUTE RESOLUTION 910

Section 16.01 Dispute Resolution Process 910

ARTICLE XVII CONFIDENTIAL INFORMATION 910

Section 17.01 Furnishing of Information 910
Section 17.02 Confidential Information 910
Section 17.03 Protection of Confidential Information 911
Section 17.04 Survival 912

ARTICLE XVIII MISCELLANEOUS 912

Section 18.01 Third Party Contracts 912
Section 18.02 No Residual Value 912
Section 18.03 No Third Party Beneficiary 912
Section 18.04 Headings 912
Section 18.05 Governing Law 912
Section 18.06 Effect of MISO Membership 912

Section 18.07 No Joint System 912
Section 18.08 Relationship to MISO Tariff 912
Section 18.09 Amendment 913
Section 18.10 Conflicts 913
Section 18.11 Waiver 913
Section 18.12 Counterparts 913
Section 18.13 Severability 913

SIGNATURES……...…30

APPENDICES……...31

This TRANSMISSION TO LOAD INTERCONNECTION AGREEMENT ("Interconnection Agreement") is dated as of this 1st day of January, 2015, between City of Kasota, a municipal corporation in the County of Le Sueur, State of Minnesota, hereinafter called "Interconnection Customer", and Northern States Power Company, a Minnesota corporation ("NSPM") and Northern States Power Company, a Wisconsin corporation ("NSPW"), hereinafter jointly called "NSP" or "Transmission Provider". For purposes of this Interconnection Agreement, "Party" shall mean Interconnection Customer or Transmission Provider, and "Parties" shall mean Interconnection Customer and Transmission Provider.

RECITALS

0.01 **WHEREAS,** NSPM and NSPW are, *inter alia*, investor-owned electric utilities engaged in the business of generating, transmitting, distributing, and selling electric power and energy and related services in the States of Minnesota, North Dakota, South Dakota, Wisconsin and Michigan subject to, *inter alia*, the jurisdiction of the Federal Energy Regulatory Commission ("FERC"); and

0.02 **WHEREAS**, NSPM and NSPW operate an integrated electric transmission system ("NSP System" or "Transmission Provider's Transmission System") pursuant to the "Restated Agreement to Coordinate Planning and Operations and Interchange Power and Energy" between NSPM and NSPW ("Interchange Agreement"); and

0.03 **WHEREAS**, Transmission Provider has filed and the FERC has accepted the Xcel Energy Operating Companies Open Access Transmission Tariff ("Tariff"), as amended or supplemented from time to time, through which interconnection service to Interconnection Customer is to be provided; and

0.04 **WHEREAS,** Interconnection Customer is a municipal utility and owns and operates load serving electric distribution facilities in the State of Minnesota; and

0.05 **WHEREAS,** Interconnection Customer desires interconnection service at the Interconnection Customer's Interconnection Facilities; and

0.06 **WHEREAS**, the Parties agree to execute this Interconnection Agreement to provide the terms and conditions for interconnection of Interconnection Customer's facilities with Transmission Provider's electrical system and to define the continuing rights, responsibilities, and obligations of the Parties with respect to the use of certain of their own and the other Party's property, assets, and facilities; and

0.07 **WHEREAS**, the Parties desire to avail themselves of mutual benefits of coordinating the development and operations of their respective systems with respect to the Interconnection Facilities.

NOW THEREFORE, the Parties agree as follows:

ARTICLE I
DEFINITIONS

Section 1.01 Rules of Construction

Capitalized terms used in this Interconnection Agreement shall have the meanings set forth above, in this Article I, or as set forth in the Tariff, whether in the singular or the plural or in the present or past tense. Other terms used in this Interconnection Agreement but not so defined shall have meanings as commonly used in the English language and, where applicable, in Good Utility Practice. Words not otherwise defined herein that have well-known and generally accepted technical or trade meanings are used herein in accordance with such recognized meanings.

Section 1.02 Good Faith and Fair Dealing

The Parties shall act reasonably and in accordance with the principles of good faith and fair dealing in the performance of this Interconnection Agreement. Unless expressly provided otherwise in this Interconnection Agreement or in the Tariff, (a) where the consent, approval, or similar action is required by a Party, such consent or approval shall not be unreasonably withheld, conditioned or delayed; and (b) wherever a Party has the right to determine, require, specify or take similar action with respect to a matter, such determination, requirement, specification or similar action shall be reasonable.

Section 1.03 General Provisions

The Parties recognize and agree that this Interconnection Agreement is entered into pursuant to and in accordance with NSP's obligations as a Transmission Provider under the Tariff and that NSP is acting in such capacity in entering into this Interconnection Agreement.

(a) In the event Interconnection Customer enters into any agreements with NSP or an Affiliate that are not in NSP's capacity as a Transmission Provider under the Tariff (*e.g.*, power purchase or retail service agreements), the Parties acknowledge and agree that such agreements shall be deemed to be separate and free-standing contracts that do not alter the terms of this Interconnection Agreement except to the extent specified therein.

(b) This Interconnection Agreement shall not be construed to create any rights between Interconnection Customer and Transmission Provider for any purpose other than providing Interconnection Service for the facilities described herein. Specifically, this Interconnection Agreement does not provide Interconnection Customer with any transmission, ancillary or other services under the Tariff.

(c) This Interconnection Agreement shall apply to interconnections of load and distribution systems, including, as applicable, generation resources (i) used to serve load which are interconnected to Interconnection Customer's distribution facilities and (ii) located on Interconnection Customer's side of the Point of Interconnection to the Transmission Provider's Transmission System. This Interconnection Agreement shall not apply to interconnections which materially support the transmission of electricity across

Transmission Provider's Transmission System. The determination of whether this Interconnection Agreement applies to an interconnection request shall be made by Transmission Provider, in its sole reasonable discretion, on a comparable and non-discriminatory basis in accordance with Good Utility Practice.

(d) Except to the extent precluded by an Emergency, Force Majeure, Forced Outage or compliance with Applicable Law (including for the avoidance of doubt those necessary to comply with Reliability Standards), Transmission Provider shall reasonably consult with Interconnection Customer, and as appropriate negotiate an amendment to this Agreement, whenever (i) Transmission Provider requires Interconnection Customer to add, modify or improve its facilities that are the subject of this Interconnection Agreement; or (ii) Transmission Provider requires Interconnection Customer to change its operation standards or practices, or operation of facilities that are the subject of this Interconnection Agreement, including curtailment procedures or practices. The requirements set forth in (i) and (ii) in the preceding sentence shall be applied on a comparable, just and reasonable and non-discriminatory basis in accordance with Good Utility Practice, as applicable, and Attachment U-1, as applicable.

(e) Any costs allocated to Interconnection Customer by Transmission Provider under this Agreement shall be in accordance with Attachment U-1 of the Tariff.

Section 1.04 Definitions

"Affiliate" shall have the meaning set forth in Section 1.1 of the Tariff.

"Applicable Law" shall mean all duly promulgated applicable federal, state and local laws, regulations, rules, ordinances, codes, decrees, judgments, directives, or judicial or administrative orders, permits and other duly authorized actions of any Governmental Authority having jurisdiction over a Party or the Parties, as applicable, their respective facilities and/or the respective services they provide.

"Attachment U-1" shall mean the Attachment to the Tariff known as the "Cost Allocation Procedures for Load Interconnections" or "Cost Allocation Procedures" which provides the interconnection request procedures and cost allocation methodology and standards applicable to this Interconnection Agreement.

"Balancing Area" shall mean an electric power system or combination of electric power systems bounded by interconnection metering and telemetering to which a common generation control scheme is applied in order to: (a) match the power output of generation resources within the electric power system(s) and energy delivered from or to entities outside the electric power system(s), with the load within the electric power system(s); (b) maintain scheduled interchange with other Balancing Areas, within the limits of Good Utility Practice; and (c) maintain the frequency of the electric power system(s) within reasonable limits in accordance with Good Utility Practice and the criteria of the NERC and the MRO.

"Balancing Area Operator" shall mean the entity with responsibility for operating and controlling generation and loads affecting Transmission Provider's transmission system. The Balancing Area Operator for the NSP System is the Midwest ISO, or its successor.

"Current Transformer" or "CT" shall mean a current transformer intended for metering, protective, or control purposes and designed to have its primary winding connected in series with a circuit carrying the current to be measured or controlled. A current transformer normally reduces current magnitudes to levels which can be handled by control, protection, and metering equipment.

"Effective Date" shall have the meaning set forth in Section 3.01.

"Emergency" shall mean a condition or situation that in the reasonable good faith determination of the affected Party based on Good Utility Practice contributes to an existing or imminent physical threat of danger to life or a significant threat to health, property or the environment.

"FERC" or "Commission" shall mean the Federal Energy Regulatory Commission, or its successor.

"Financing Party" shall have the meaning set forth in Section 15.01(c).

"Force Majeure" shall have the meaning set forth in Section 10.1 of the Tariff.

"Forced Outage" shall mean in the case of Interconnection Customer's distribution system, taking the distribution system, in whole or in part, out of service by reason of an Emergency or Network Security condition, unanticipated failure or other cause beyond the reasonable control of Interconnection Customer, when such removal from service was not scheduled in accordance with Section 5.02; and, in the case of Transmission Provider taking its transmission system, in whole or in part, out of service by reason of an Emergency or Network Security Condition, unanticipated failure, or other cause beyond the reasonable control of NSP when such removal from service was not scheduled in accordance with Section 5.02.

"Good Utility Practice" shall have the meaning set forth in Article 1 of the Tariff.

"Governmental Authority" shall mean any federal, state, local or other governmental regulatory or administrative agency, court, commission, department, board, or other governmental subdivision, legislature, rulemaking board, tribunal, or other governmental authority having jurisdiction over the Parties, their respective facilities, or the respective services that they provide, and exercising or entitled to exercise any administrative, executive, police, or taxing authority or power; provided, however, that such term does not include Interconnection Customer, Transmission Provider or any Affiliate thereof.

"Indemnified Party" shall have the meaning set forth in Section 14.02.

"Indemnifying Party" shall have the meaning set forth in Section 14.02.

"Initial Period" shall have the meaning set forth in Section 3.01.

"Interconnection Customer Interconnection Facilities" shall mean the equipment owned by Interconnection Customer for purposes of interconnecting to the Transmission Provider Interconnection Facilities, including but not limited to the substation, circuits, circuit breakers, bus work, land easements, relays, communications circuits, and associated equipment and any replacement or additional equipment that Interconnection Customer may install due to equipment failure or to meet changed industry standards and all related instrument transformers, substation and physical structures, all transmission facilities required to access the Point of Interconnection, and Interconnection Customer's metering, relays, electric energy collection network, and generation control equipment. The Interconnection Customer Interconnection Facilities are identified and described in Appendix A.

"Interconnection Facilities" shall mean the Interconnection Customer Interconnection Facilities and Transmission Provider Interconnection Facilities, collectively, as described in Appendix A.

"Interconnection Guidelines" shall mean *Xcel Energy's Interconnection Guidelines For Transmission Interconnected Customer Loads*, as they may be revised from time to time by Transmission Provider and posted on Transmission Provider's website (www.xcelenergy.com), the provisions of which shall apply to the Parties as set forth in this Interconnection Agreement.

"Interconnection Service" shall mean the service Transmission Provider will provide to Interconnection Customer to interconnect the Interconnection Customer Interconnection Facilities to the

Transmission Provider's electric system (such facilities being described more fully in Appendix A), and the ongoing operations and maintenance of such facilities.

"Local Balancing Area Operator" or "LBA" shall mean the entity with responsibility for operating and controlling local generation and loads affecting Transmission Provider's transmission system, subject to the authority of the Balancing Area Operator. The Local Balancing Area Operator is the NSP Control Center or its successor.

"Meter Data Management Agent" or "MDMA" shall mean the entity designated by the Interconnection Customer through the execution of any necessary agreements to do so that provides meter data to the Transmission Provider and/or to MISO (as "Transmission Provider" as that term is defined in the MISO Tariff), whichever is applicable.

"Metering Device(s)" shall mean all meters, current and potential transformers, RTU, and data processing equipment used to measure, record, or transmit data relating to the electric power and energy output from, or input to, the Interconnection Customer, as identified in Appendix A. The Metering Point shall be separately identified from the Point of Interconnection.

"MISO" or "Midwest ISO" shall mean the Midwest Independent Transmission System Operator, Inc. or its successor organization.

"MISO Tariff" shall mean MISO's Open Access Transmission, Energy and Operating Reserve Markets Tariff in effect from time to time, as accepted for filing by FERC.

"MRO" shall mean the Midwest Reliability Organization, Inc., or its successor organization.

"NERC" shall mean the North American Electric Reliability Corporation, or its successor organization.

"Network Security" shall mean the ability of the NSP System to withstand sudden disturbances such as unforeseen conditions, electric short circuits or unanticipated loss of system elements.

"Network Upgrade" shall mean the additions, modifications, and upgrades to the NSP System at or beyond the Point of Interconnection.

"NSP Control Center" or "NSPCC" shall mean the NSP Transmission Control Center(s), as identified in Appendix B, responsible for operation of the NSP System, including the Transmission Provider Interconnection Facilities.

"Other Party Group" shall have the meaning set forth in Section 13.01(e).

"Planned Outage" shall mean action by (a) Interconnection Customer to take its equipment, facilities or systems out of service, partially or completely, to perform work on specific components that is scheduled in advance and has a predetermined start date and duration pursuant to the procedures set forth in Section 5.02; or (b) Transmission Provider to take its equipment, facilities and systems out of service, partially or completely, to perform work on specific components that is scheduled in advance and has a predetermined start date and duration pursuant to the procedures set forth in Section 5.02.

"Point of Interconnection" shall mean the physical point or points at which the Interconnection Customer Interconnection Facilities interconnect with the Transmission Provider Interconnection Facilities, as depicted in Appendix A.

"Reasonable Efforts" shall mean, with respect to an action required to be attempted or taken by a Party under the Interconnection Agreement, efforts that are timely and consistent with Good Utility Practice and are otherwise substantially equivalent to those a Party would use to protect its own interests.

"Reliability Standards" shall mean mandatory reliability standards adopted by NERC or MRO and approved by FERC, as amended from time to time, applicable to the facilities owned, and/or operated by Interconnection Customer and Transmission Provider, respectively.

"Remote Terminal Unit" or "RTU" shall mean a device installed at a substation or generation facility, and at the NSPCC, and is used to provide communication for remote control and indication of substation or generation facility equipment from the NSPCC.

"SCADA" shall have the meaning set forth in Section 4.09.

"State Regulatory Commission" shall mean the state regulatory agency with jurisdiction over (a) the retail electric rates and tariffs of NSPM or NSPW where the Point of Interconnection is located, and (b) determination of need or siting for new transmission facilities.

"System Protection Facilities" shall mean the equipment required to protect (a) the Transmission Provider's electric system, the systems of others directly or indirectly interconnected with the Transmission Provider's electric system, and the Transmission Provider's customers from faults occurring on the Interconnection Customer's side of the Point of Interconnection; and (b) Interconnection Customer from faults occurring on the Transmission Provider's electric system or on the systems of others to which the Transmission Provider's electric system is directly or indirectly interconnected.

"Tariff" or "OATT" shall mean the Xcel Energy Operating Companies Open Access Transmission Tariff on file with FERC, as amended from time to time.

"Term" shall mean the period of time during which this Interconnection Agreement shall remain in force and effect.

"TOA" or "Transmission Owners Agreement" shall mean the Agreement of Transmission Facilities Owner to Organize the Midwest Independent Transmission System Operator, Inc. accepted by FERC Order dated September 16, 1998, as amended from time to time and accepted for filing by FERC.

"Transmission Provider Interconnection Facilities" shall mean those facilities owned by the Transmission Provider necessary to establish a physical interconnection between Transmission Provider's existing electric system and the Interconnection Customer Interconnection Facilities at the Point of Interconnection, including but not limited to switches, circuits, circuit breakers, bus work, land easements, relays, communications circuits, and associated equipment, and any replacement or additional equipment that Transmission Provider may install due to equipment failure or to meet changed industry standards. The Transmission Provider Interconnection Facilities are identified and described in Appendix A. The Transmission Provider Interconnection Facilities shall not include Network Upgrades.

"Voltage Transformer" or "VT" shall mean a transformer intended for metering, protective, or control purposes and designed to have its primary winding connected either between the primary conductors to be measured or between a conductor and ground. A voltage transformer normally reduces voltage magnitudes to levels which can be handled by control, protection, and metering equipment. The historic term for a VT is potential transformer.

ARTICLE II
SCOPE

Section 2.01 Scope of Interconnection Agreement

(a) General. Transmission Provider shall provide Interconnection Service to Interconnection Customer as provided herein. This Agreement supersedes any prior interconnection agreement(s) between the Parties through which the Interconnection Customer's Interconnection Facilities were interconnected to Transmission Provider's electrical system. However, unless listed, any other agreements or schedules under which services are or

may be provided shall remain in force. Specifically, this Interconnection Agreement supersedes the following agreement(s) as of the Effective Date: Municipal Interconnection and Interchange Agreement Rate Schedule 478, accepted for filing effective December 20, 2012, in FERC Docket No. ER13-231-000.

(b) Limited Scope of Interconnection Agreement. This Interconnection Agreement sets forth the terms and conditions of Interconnection Service provided by Transmission Provider to Interconnection Customer. Although the Transmission Provider intends this Interconnection Agreement to be a service agreement under the Tariff, the establishment of Interconnection Service under this Interconnection Agreement does not in itself entitle Interconnection Customer to receive any services under the Tariff other than the Interconnection Service, as provided for herein. Any other services that Interconnection Customer may require, such as transmission service, must be separately arranged under the Tariff or MISO Tariff in accordance with the terms and conditions of such tariff, and paid for by Interconnection Customer or other user of such services.

(c) Other Arrangements. Interconnection Customer is responsible for making arrangements for the power supply of its load requirements and delivery of capacity and energy to its system. The establishment of an interconnection under this Interconnection Agreement does not in itself entitle Interconnection Customer to obtain any services from the Transmission Provider that may be subject to the jurisdiction of FERC, or the State Regulatory Commission; Interconnection Customer must arrange for any such services in accordance with the applicable provider's tariff or service requirements.

Section 2.02 Facilities Served. The scope of the Interconnection Service provided hereunder is based on Interconnection Customer's description of its facilities (including the Interconnection Customer Interconnection Facilities), and Transmission Provider's description of its facilities (including the Transmission Provider Interconnection Facilities), as set forth in Appendix A.

ARTICLE III
TERMS AND TERMINATION

Section 3.01 Term. This Interconnection Agreement shall become effective on the first day of the first month after being executed by the Parties, unless the Parties shall provide otherwise, or if filed unexecuted, upon the date specified by FERC ("Effective Date"). Unless terminated earlier in accordance with Section 3.02 below, this Interconnection Agreement shall remain in effect for an initial period of ten (10) years from the Effective Date ("Initial Period"), and from year to year thereafter, but shall be subject to termination by either Party at the end of the Initial Period or on any anniversary date thereof by such Party giving written notice of its intention to terminate not less than twelve (12) months prior to the end of the Initial Period and/or anniversary date.

In the event either Party provides notice of termination of this Interconnection Agreement under this Section 3.01, and Interconnection Customer still requires interconnection service to serve loads on its distribution system, the Parties shall use commercially Reasonable Efforts to negotiate a replacement interconnection agreement. If Interconnection Customer no longer requires interconnection service, upon termination of this Interconnection Agreement, Transmission Provider may, at its sole discretion and at Interconnection Customer's expense, permanently disconnect or remove the Transmission Provider Interconnection Facilities, provided such expense is just and reasonable and not unduly discriminatory.

Section 3.02 Early Termination. Notwithstanding the term specified in Section 3.01, this Interconnection Agreement may be terminated early in the following circumstances: (a) by mutual agreement among the Parties; or (b) by either Party in the event of any material breach of this Interconnection Agreement by the other Party, provided, such termination shall be subject to FERC approval as set forth in Section 15.03 of this Interconnection Agreement.

The Parties shall use commercially Reasonable Efforts to mitigate the costs, damages and charges arising out of an early termination under this Section 3.02. In the event of a Dispute regarding the early termination fee, either Party may request dispute resolution pursuant to the procedures in Article XVI.

Section 3.03 Survival. Certain provisions of this Interconnection Agreement shall continue in effect after termination of this Interconnection Agreement to give full effect to its terms. Such provisions include, but are not necessarily limited to, those relating to early termination, Interconnection Customer's payment for installation, operation, and maintenance of the Interconnection Customer's Interconnection Facilities, and, as applicable, to provide for disconnection of the Interconnection Customer's Interconnection Facilities from Transmission Provider's electric system, final billings and adjustments related to the period prior to termination, a Party's right to terminate, indemnification, and payment of any money due and owing to either Party pursuant to this Interconnection Agreement.

ARTICLE IV
OWNERSHIP, CONSTRUCTION, OPERATION AND MAINTENANCE

Section 4.01 Summary Description. Appendix A, which is attached hereto and made a part hereof, provides a description of Interconnection Customer's electrical facilities and distribution system, including the Interconnection Customer Interconnection Facilities, Transmission Provider's electrical facilities and transmission system, including the Transmission Provider Interconnection Facilities, and the Point of Interconnection.

Section 4.02 Interconnection Customer Interconnection Facilities and System Protection Facilities. Interconnection Customer shall at Interconnection Customer's sole expense design, construct, operate, maintain and own in accordance with applicable laws, rules and regulations, the Tariff, and Good Utility Practice, the Interconnection Customer Interconnection Facilities as described in Appendix A. Further Interconnection Customer shall operate the Interconnection Customer Interconnection Facilities in a manner that protects the Transmission Provider's electric system and the Transmission Provider Interconnection Facilities from transients, faults, and other operating contingencies occurring at or caused by the Interconnection Customer.

Design and specification of System Protection Facilities including, protective relaying, alarming, fault recording, control, dVAR controller, metering, and related systems for substations, high voltage switch gear and transformers shall be subject to the Transmission Provider's review and approval, which approval shall not be unreasonably withheld or delayed. All System Protection Facilities must be in compliance with applicable laws, rules and regulations, Good Utility Practice and the requirements set forth in this Interconnection Agreement.

Interconnection Customer may be required to install, operate and maintain facilities and equipment required for Transmission Provider to comply with applicable frequency-based, voltage-based and manual load shedding obligations established by Reliability Standards or the Balancing Area Operator. Transmission Provider shall require Interconnection Customer to install such facilities or equipment only to the extent it imposes comparable obligations on Transmission Provider's native load customers.

Section 4.03 Transmission Provider Interconnection Facilities. Transmission Provider shall design, construct, operate, maintain, and own in accordance with applicable laws, rules and regulations, the Tariff, Good Utility Practice and the Interconnection Guidelines, the Transmission Provider Interconnection Facilities shown on Appendix A, and shall operate such facilities in a manner that protects the Interconnection Customer's electric system, including the Interconnection Customer Interconnection Facilities, from transients, faults, and other operating contingencies. The costs associated with Transmission Provider's Interconnection Facilities required to provide service to

Interconnection Customer may be allocated to Interconnection Customer in accordance with Attachment U-1 to the Tariff.

Transmission Provider represents that to the best of its knowledge, the Interconnection Facilities, as of the Effective Date and described in Appendix A, are sufficient to permit interconnection of the Interconnection Customer Interconnection Facilities with the Transmission Provider Interconnection Facilities without additional equipment and in accordance with applicable Tariff interconnection requirements. Further Transmission Provider will support the design and adequacy of the Interconnection Facilities as described in Appendix A before any regulatory body having approval authority over the Interconnection Facilities.

Section 4.04 Network Upgrades. Transmission Provider shall plan, design, procure, construct, own, operate and maintain any Network Upgrades determined to be needed by Transmission Provider in accordance with Good Utility Practice, the Tariff and this Interconnection Agreement. The costs associated with Network Upgrades required to provide service to Interconnection Customer may be allocated to Interconnection Customer in accordance with Attachment U-1 to the Tariff.

Section 4.05 Modifications to Interconnection Facilities.

(a) Either Party may undertake modifications to its respective Interconnection Facilities which shall be designed, constructed and operated in accordance with this Interconnection Agreement and Good Utility Practice; provided however, if (1) Interconnection Customer proposes (i) to make any change or modification to the configuration or operation of the Interconnection Customer Interconnection Facilities which may impact Transmission Provider's Transmission System, including the Transmission Provider Interconnection Facilities, (ii) to add a new Point of Interconnection, or (iii) to eliminate a Point of Interconnection (except when this Interconnection Agreement is terminated); or (2) Transmission Provider proposes to make any change or modification to the configuration or operation of the Transmission Provider Interconnection Facilities which may impact the Interconnection Customer Interconnection Facilities, (i) the Party proposing the change shall provide sufficient notice and information regarding such modification so that the other Party may evaluate the potential impact of such modification prior to the commencement of any work, and (ii) the Parties shall negotiate, in good faith, an amendment to this Interconnection Agreement as may be necessary to address the proposed change.

(1) Information provided under Section 4.05(a) may be designated by a Party to be Confidential Information hereunder, including, but not be limited to, information concerning the timing of such modification and how such modifications are expected to impact the other Party's system. Unless a shorter period of time is appropriate for a Party to respond to an Emergency, or comply with Reliability Standards or Applicable Law, the Party desiring to perform such work shall provide the relevant drawings, plans and specifications to the other Party at least ninety (90) days in advance of the commencement of the work or such shorter period upon which the Parties may agree, which agreement shall not unreasonably be withheld, conditioned or delayed.

(2) In the event the Parties are unable to agree to appropriate amendments or modifications to this Interconnection Agreement pursuant to Section 4.05(a), the Transmission Provider will unilaterally file, on a timely basis, with FERC an amendment to this Interconnection Agreement.

(3) The Parties' agreement to add a new Point of Interconnection shall be documented pursuant to Appendix C and Appendix E. The Parties' agreement to modify or remove a Point of Interconnection shall be documented pursuant to Appendix D and

Appendix E; provided however, such documentation for removal of a Point of Interconnection is not necessary when this Interconnection Agreement is terminated pursuant to Section 3.02 or Article XV.

(b) To the extent Interconnection Customer is the Party modifying its interconnection facilities, Interconnection Customer shall be responsible for the costs of any additions, modifications or replacements that may be necessary to maintain or upgrade the Interconnection Customer Interconnection Facilities consistent with applicable laws, rules and regulations, the Tariff, Good Utility Practice, and the Interconnection Guidelines. Interconnection Customer shall own any modifications to the Interconnection Customer Interconnection Facilities.

(c) In the event the Transmission Provider designs and constructs new or additional Transmission Provider Interconnection Facilities or upgrades, improvements or other modifications to existing Transmission Provider Interconnection Facilities that result in those facilities qualifying as Network Upgrades (such facilities shall be treated as Network Upgrades for purposes of cost assignment), then Interconnection Customer shall not be responsible for the cost of such facilities or modifications.

Section 4.06 Ownership of Transmission Provider Interconnection Facilities and Network Upgrades. As a general rule, Transmission Provider shall own, design, construct, operate and maintain the Transmission Provider Interconnection Facilities and Network Upgrades, including facilities that are the subject of Sections 4.03 through 4.07. The Parties acknowledge and agree that there may be circumstances where alternative ownership arrangements for such facilities (*e.g.*, ownership by the Interconnection Customer) may be warranted if mutually agreed and in accordance with Good Utility Practice, just and reasonable, and not unduly discriminatory or preferential. To determine the appropriateness of using an alternative ownership arrangement, the Parties may consider factors such as: (i) state and federal legal requirements, including applicable rights of first refusal; (ii) achieving the lowest reasonable cost; (iii) the effect of tax liabilities and payment of such liabilities; (iv) the relationship of the Transmission Provider Interconnection Facilities and/or Network Upgrades to other facilities owned by the Transmission Provider or Interconnection Customer; (v) the ability of the Transmission Provider or Interconnection Customer to own, operate and maintain the Transmission Provider Interconnection Facilities and/or Network Upgrades in accordance with Applicable Law and Reliability Standards; (vi) the purpose of the Transmission Provider Interconnection Facilities and/or Network Upgrades with consideration to who will benefit from such facilities; and (vii) whether the Party possesses adequate insurance to hold harmless the other Party and any third party from any claim, penalty, damage, liability or injury associated with such facilities. Should the Parties disagree on entering into an alternative ownership arrangement, and/or the terms and conditions of the alternative ownership arrangement, either Party shall have the right to unilaterally make applications to FERC under the Federal Power Act to seek resolution of such disagreement.

Alternative ownership and other arrangements may be provided for in the Interconnection Agreement or Appendix C or Appendix D supplemental agreement. Nothing herein shall waive Parties' rights or entitlements under Applicable Law.

Section 4.07 Construction. The Parties agree construction-related activities shall not commence until (1) the conditions set forth in Section 4.05 and/or Attachment U-1 have been satisfied, (2) all necessary federal, state, local and regulatory permits, permissions or approvals have been obtained, and (3) the Parties have agreed to a final construction schedule.

Section 4.08 Reliability Standards. Interconnection Customer shall be responsible for compliance with all Reliability Standards applicable to Interconnection Customer's electrical system; and Transmission Provider shall be responsible for compliance with all Reliability Standards applicable to its transmission system. Each Party shall be responsible for the costs of compliance with such Reliability Standards for their respective facilities and systems, including (a) costs associated with

modifying their respective facilities or systems to comply with changes in such Reliability Standards; and (b) any financial penalties for non-compliance. The Parties agree to share data or documentation as may be required to demonstrate compliance with Reliability Standards where an individual Party has possession of data or documentation necessary for the other Party to demonstrate compliance.

Section 4.09 Interconnection Guidelines. The Interconnection Guidelines provide additional and more detailed standards for designing, testing, studying, constructing, operating, maintaining and interconnecting at the Point of Interconnection. Transmission Provider shall develop or promulgate the Interconnection Guidelines, including any updates, changes or modifications thereto, in accordance with Good Utility Practice. The Interconnection Guidelines include, among other things, power factor requirements, supervisory control and data acquisition ("SCADA") equipment requirements, and metering requirements.

Interconnection Customer will comply with the Interconnection Guidelines, as appropriate, for (i) any new point(s) of interconnection requested by Interconnection Customer on or after the Effective Date; (ii) any existing point(s) of interconnection materially modified after the Effective Date; and (iii) if the MISO market registration is changed; provided, however, Interconnection Customer is not required to comply with the Interconnection Guidelines for any Point(s) of Interconnection established pursuant to a prior interconnection agreement among the Parties, where no material modification was needed to the Point of Interconnection as a result of entering into this Agreement. After consultation with Interconnection Customer pursuant to Section 1.03(d), Transmission Provider will determine if there has been a material modification and such determination shall be done so in accordance with Good Utility Practice, and on a comparable, non-discriminatory basis Except when Interconnection Customer is excused from complying with the Interconnection Guidelines, failure by Transmission Provider or Interconnection Customer to fulfill its obligations under the Interconnection Guidelines may be a material breach of this Interconnection Agreement.

Should a conflict develop between the Interconnection Guidelines and FERC rules, the Tariff or applicable Reliability Standards, the Parties agree to abide by the FERC rules, Tariff or Reliability Standards until Transmission Provider modifies the Interconnection Guidelines to remove such conflict. The Parties shall use the Dispute Resolution procedures set forth in Article XVI to resolve any disagreements regarding the interpretation, application or implementation of the Interconnection Guidelines.

Section 4.10 Power Factor. Unless prevented by circumstances beyond Interconnection Customer's control, including Forced Outages, Interconnection Customer shall have sufficient power factor control equipment (such as capacitors) installed to maintain at minimum a 95-percent lagging or leading power factor at the Point of Interconnection for those loads greater than 1 MW. Interconnection Customer shall maintain the aforesaid requirement during peak load periods and avoid leading power factor during light load conditions. Over time, it is the intention of the Parties that Interconnection Customer and Transmission Provider's load serving function will improve their respective power factor to a 98-percent lagging to leading power factor for those aggregated loads greater than 5 MWs. The power factor will be determined based on the MWh and MVARh flows during the monthly peak hour interval measured at each point of metering as follows: Power Factor = MWh/sqrt(MWh^2 + MVARh^2). With mutual agreement, reactive power support may be considered at an adjacent point of interconnection provided the substation is in electrically close proximity, in which case, the MWh and MVARh flows for each transformer may be combined for the purposes of compliance with this Section 4.10.

In the event Interconnection Customer has an aggregated load of over 1 MW but does not have sufficient power factor control equipment (such as capacitors) installed, to maintain at

a minimum a 95-percent lagging or leading power factor at the Point of Interconnection, Interconnection Customer within thirty (30) days after written notice from Transmission Provider of such deficiency shall correct the deficiency or provide Transmission Provider with a written commitment to correct the deficiency. In the event Interconnection Customer makes a written commitment to add power factor control equipment (such as capacitors), Interconnection Customer shall exert commercially reasonable efforts to expeditiously bring such equipment into service and to complete installation within one (1) year from the initial notice or within such other time established by mutual agreement between the Parties. If the additional capacitors are not installed within the allowed time and Transmission Provider installs or has installed power factor control equipment on the Transmission System, Transmission Provider may bill Interconnection Customer a facilities fee based upon Transmission Provider's capital installation cost of an equivalent amount of power factor control equipment.

Section 4.11 Meter Data Management. Interconnection Customer shall have the right to select any entity, including itself, to be the MDMA that provides meter data to MISO; provided, however, that such entity has the necessary and appropriate qualifications to be an MDMA and provide meter data to MISO. Should the Parties mutually agree that Transmission Provider shall serve as the MDMA for Interconnection Customer, the rate for MDMA services shall be as set forth in the Tariff.

Section 4.12 Access. Appropriate representatives of each Party shall at all reasonable times; including weekends and nights, and with three (3) business days prior notice, have access to the other Party's facilities, to take readings and to perform all inspections, maintenance, service, and operational reviews as may be appropriate or necessary to facilitate the performance of this Interconnection Agreement. While on the other Party's premises, each Party's representatives shall announce their presence and observe such safety precautions as may be required and shall conduct themselves in a manner that will not interfere with the other Party's operations.

Section 4.13 Right of Installation. Each Party will make available suitable space for installation by the other Party of necessary equipment, apparatus and devices required for the performance of this Interconnection Agreement.

Section 4.14 Right of Removal. Any and all equipment, apparatus and devices caused to be placed or installed by one Party on, or in, the premises of the other Party shall be and remain the property of the Party owning such equipment, apparatus and devices regardless of the mode or manner of annexation or attachment to the premises. All foundations for all equipment shall be removed completely from the premises or to a lesser degree if an agreement for the lesser degree is reached between the Parties at the time. Notwithstanding the forgoing, in lieu of removal, the Parties reserve the right to sell any and all equipment, apparatus and devices that are attached to the premises. Once the aforesaid equipment is removed, the Parties will update Appendix A to reflect the removal.

Section 4.15 Transfer of Control or Sale of Facilities. In any sale or transfer of control of the Interconnection Customer's Interconnection Facilities, Interconnection Customer shall as a condition of such sale or transfer require the acquiring party or transferee with respect to the transferred facilities either to assume the obligations of Interconnection Customer with respect to this Interconnection Agreement or to enter into an agreement with Transmission Provider imposing on the acquiring party or transferee the same obligations applicable to Interconnection Customer pursuant to this Section 4.15.

ARTICLE V
OUTAGES AND COORDINATION

Section 5.01 Disconnection.

(a) Except when there is an Emergency, Forced Outage, Force Majeure and/or to comply with Applicable Law, including Reliability Standards, the Parties shall reasonably consult each other prior to disconnecting facilities.

(b) If at any time, the Transmission Provider observes any protective equipment which appears to have been changed other than pursuant to Section 4.05 and/or Attachment U-1, or failed, Transmission Provider shall have the right, if Transmission Provider determines that such change may have a material adverse impact on the safety or reliability of Transmission Provider's electric system consistent with Good Utility Practice, to disconnect Interconnection Customer's electric system from Transmission Provider's electric system, provided Transmission Provider first provides commercially reasonable notice to Interconnection Customer. Transmission Provider may require, at Interconnection Customer's expense (subject to Attachment U-1), a new calibration and activation test of Interconnection Customer's protective equipment after such equipment has been corrected or repaired.

Section 5.02 Outages. In accordance with Good Utility Practice, each Party may, in close cooperation with the other, remove from service its system elements that may impact the other Party's system as necessary to perform maintenance or testing or to replace installed equipment. Absent the existence of an Emergency, the Party scheduling a removal of a system element from service will use good-faith efforts to schedule such removal on a date mutually acceptable to both Parties, in accordance with Good Utility Practice.

In the event of a Forced Outage of a system element of the Interconnection Customer's electric system adversely affecting the Transmission Provider's facilities or electric system, Interconnection Customer will use Good Utility Practice to promptly restore that system element to service. In the event of a Forced Outage of a system element of the Transmission Provider's electric system adversely affecting the Interconnection Customer's facilities or electric system, the Transmission Provider will use Good Utility Practice to promptly restore that system element to service.

In the event of a Planned Outage of a system element of Interconnection Customer's electric system adversely affecting Transmission Provider's facilities or electric system, Interconnection Customer will act in accordance with Good Utility Practice to promptly restore that system element to service in accordance with its schedule for the work that necessitated the planned outage. In the event of a Planned Outage of a system element of the Transmission Provider's electric system adversely affecting Interconnection Customer's facilities or electric system, Transmission Provider will act in accordance with Good Utility Practice to promptly restore that system element to service in accordance with its schedule for the work that necessitated the planned outage.

Section 5.03 Outage Reporting. The Parties shall comply with all current Transmission Provider, and MISO reporting requirements, as they may be revised from time to time, and as they apply to the Interconnection Customer or Transmission Provider. When a Forced Outage occurs that affects the Interconnection Customer Interconnection Facilities or impacts Interconnection Customer's electrical system such that there is an adverse impact to the Point of Interconnection, Interconnection Customer shall notify the NSP Control Center of the existence, nature, and expected duration of the Forced Outage as soon as practical, but in no event later than one (1) hour after the Forced Outage occurs. Interconnection Customer shall immediately inform the NSP Control Center of changes in the expected duration of the Forced Outage unless relieved of this obligation by the NSP Control Center for the duration of each Forced Outage. When a Forced Outage occurs that affects the Transmission Provider Interconnection Facilities or impacts Transmission Provider's transmission system such that there is an adverse impact to the Point of Interconnection, Transmission Provider shall notify Interconnection Customer of the existence, nature, and expected duration of the Forced Outage as soon as practical.

Section 5.04 Switching and Tagging Rules. The Parties shall abide by their respective switching and tagging rules for obtaining clearances for work or for switching operations on equipment. Transmission Provider shall notify Interconnection Customer of Transmission Provider's switching and tagging rules, and provide periodic updates of such rules as they may change from time to time. Interconnection Customer shall establish switching and tagging rules for Interconnection Customer Interconnection Facilities, and shall provide such rules to the Transmission Provider.

Section 5.05 Coordination. If a Party's interconnection facilities are subject to MISO's functional control, the Parties will coordinate with the applicable functional directives from MISO. In all other circumstances:

(a) Electrical system operation shall be coordinated between Interconnection Customer and Transmission Provider, including the coordination of equipment outages, voltage levels, real and reactive power flow monitoring, and switching operations, which affect the Balancing Area or LBA, as required by the Tariff and this Interconnection Agreement.

(b) If either Interconnection Customer or Transmission Provider operations are causing a condition on the interconnected electrical network where line loadings, equipment loadings, voltage levels or reactive flow significantly deviate from normal operating limits or can be expected to exceed emergency limits following a contingency, and reliability of the bulk power supply is threatened, the LBA, or Transmission Provider shall take immediate steps and make Reasonable Efforts to relieve, correct or control the condition. These steps include notifying other affected electric utility systems and MISO, as applicable, adjusting generation, changing schedules between Balancing Areas, initiating load relief measures, and taking such other reasonable action as may be required. Electrical equipment is to be operated within its normal rating established by the owning Party except for temporary conditions after a contingency has occurred.

(c) If either Interconnection Customer or Transmission Provider changes the normal operation of its system at a Point of Interconnection, the Parties shall consider any resulting benefits or adverse impacts to the reliability or transfer capability of the interconnected network for purposes of determining any applicable adjustments to the Parties' respective system usage rights and responsibilities.

(d) The Parties shall cooperate to supply, as applicable, MISO required information, including but not limited to, calculation of available flowgate or transmission capacity determination and for security constrained economic dispatching purposes.

(e) Each Party shall notify the other as soon as practicable whenever:

(1) Problems with a Point of Interconnection are detected that could result in mis-operation of interconnection protection or other interconnection equipment;

(2) The interconnection is opened by protective relay action;

(3) Interconnection equipment problems occur and result in an outage to a portion of Transmission Provider's electric system;

(4) A Party intends to initiate switching to close the interconnection; or,

(5) A Party intends to initiate switching to open the interconnection.

Section 5.06 Emergency. In the event of an Emergency, the Party becoming aware of the Emergency may, in accordance with Good Utility Practice and using its reasonable judgment, take such action as is reasonable and necessary to prevent, avoid, or mitigate injury, danger, and loss.

(a) In the event Interconnection Customer has identified an Emergency involving the Transmission Provider Interconnection Facilities, Interconnection Customer shall obtain the consent of Transmission Provider personnel prior to manually performing any switching operations unless immediate action is essential to protecting the safety of individuals or against extreme damage to property.

(b) Transmission Provider may, consistent with Good Utility Practice, take whatever actions or inactions the Transmission Provider deems necessary during an Emergency in order to: (1) preserve public health and safety; (2) preserve the reliability of the Transmission Provider's electric system, including the Transmission Provider Interconnection Facilities; (3) limit or prevent damage; and (4) expedite restoration of service. Transmission Provider shall use Reasonable Efforts to minimize the effect of such actions or inactions on the Interconnection Customer Interconnection Facilities.

(c) Interconnection Customer may, consistent with Good Utility Practice, take whatever actions or inactions with regard to the Interconnection Customer Interconnection Facilities Interconnection Customer deems necessary during an Emergency in order to: (1) preserve public health and safety; (2) preserve the reliability of the Interconnection Customer Interconnection Facilities; (3) limit or prevent damage; and (4) expedite restoration of service. Interconnection Customer shall use Reasonable Efforts to minimize the effect of such actions or inactions on Transmission Provider's electric system.

(d) Transmission Provider shall provide Interconnection Customer with prompt oral or electronic notification under the circumstances of an Emergency that may reasonably be expected to affect Interconnection Customer's operations, to the extent the Transmission Provider is aware of the Emergency. Interconnection Customer shall provide the Transmission Provider with prompt oral or electronic notification under the circumstances of an Emergency which may reasonably be expected to affect the Transmission Provider's electric system, to the extent Interconnection Customer is aware of the Emergency. To the extent the Party becoming aware of an Emergency is aware of the facts of the Emergency, such oral or electronic notification shall describe the Emergency, the extent of the damage or deficiency, its anticipated duration, and the corrective action taken and/or to be taken.

(e) To the extent a system Emergency exists on Transmission Provider transmission system, and Transmission Provider, Balancing Area Operator, or Reliability Coordinator determines it is necessary for the Transmission Provider and Interconnection Customer to shed load, the Parties shall shed load in accordance with the Tariff.

ARTICLE VI
SAFETY

Section 6.01 Safety Standards. The Parties agree that all work performed under this Interconnection Agreement shall be performed in accordance with all applicable laws, regulations, rules, standards, practices and procedures pertaining to the safety of persons or property. To the extent a Party performs work on the other Party's premises, the Party performing work shall also abide by the safety, or other access rules applicable to those premises.

Each Party shall be solely responsible for the safety and supervision of its own employees, agents, representatives, and contractors.

ARTICLE VII
ENVIRONMENTAL CONSIDERATIONS

Section 7.01 Environmental Considerations. Each Party will remain responsible for compliance with any and all environmental laws applicable to its own respective property, facilities, and operations. Each Party shall promptly notify the other Party upon discovering any release of any hazardous substance by it on the property or facilities of the other Party, or which may migrate to, or adversely impact the property, facilities or operations of, the other Party and shall promptly furnish to the other Party copies of any reports filed with any governmental agencies addressing such events.

The Party responsible for the release of any hazardous substance on the property or facilities of the other Party, or which may migrate to, or adversely impact the property, facilities or operations of, the other Party shall be responsible for the reasonable cost of performing any and all remediation or abatement activity and submitting all reports or filings required by environmental laws. Advance written notification (except in emergency situations, in which verbal, followed by written notification, shall be provided as soon as practicable) shall be provided by any Party performing any remediation or abatement activity on the property or facilities of the other Party, or which may adversely impact the property, facilities, or operations of, the other Party. Except in an Emergency, such remediation or abatement activity shall be performed only with the consent of the Party owning the affected property or facilities. The Parties agree to coordinate, to the extent necessary, the preparation of site plans, reports or filings required by law or regulation.

ARTICLE VIII
FORCE MAJEURE

Section 8.01 Effect of Declaring Force Majeure. Except for the obligation to make any payments under this Interconnection Agreement, neither Party shall be considered to be in default or breach of this Interconnection Agreement or liable in damages or otherwise responsible to the other Party for any delay in or failure to carry out any of its obligations under this Interconnection Agreement if, and only to the extent that, the Party is unable to perform or is prevented from performing by an event of Force Majeure. Notwithstanding the foregoing sentence, neither Party may claim Force Majeure for any delay or failure to perform or carry out any provision of this Interconnection Agreement to the extent that such Party has been negligent or engaged in intentional misconduct and such negligence or intentional misconduct substantially and directly caused that Party's delay or failure to perform or carry out its duties and obligations under this Interconnection Agreement.

Section 8.02 Procedures for Declaring Force Majeure. A Party claiming Force Majeure must:

(a) Give written notice to the other Party of the occurrence of a Force Majeure as soon as practicable;

(b) Use Reasonable Efforts to resume performance or the provision of service hereunder as soon as practicable;

(c) Take all commercially reasonable actions to correct or cure the Force Majeure;

(d) Exercise all Reasonable Efforts to mitigate or limit damages to the other Party; except that neither party shall be required to settle any strike, walkout, lockout or other labor dispute on terms which, in the sole judgment of the Party involved in the dispute, are contrary to its interest; and

(e) Provide written notice to the non-declaring Party, as soon as practicable, of the cessation of the adverse effect of the Force Majeure on its ability to perform its obligations under this Interconnection Agreement.

ARTICLE IX
BILLING AND PAYMENT

Section 9.01 Billing Procedure. Transmission Provider shall bill Interconnection Customer for the actual costs incurred under this Interconnection Agreement consistent with the procedures set forth in Article 7 of the Tariff. Payment of an invoice shall not relieve the paying Party from any responsibilities or obligations it has under this Interconnection Agreement, nor shall such payment constitute a waiver of any claims arising hereunder.

Section 9.02 Interest on Unpaid Balances. Interest on any unpaid amounts that are past due (including amounts placed in escrow) shall be calculated in accordance with Article 7 of the Tariff.

Section 9.03 Billing Disputes. If all or part of any bill is disputed by a Party, that Party shall promptly pay the amount that is not disputed, provide the other Party a reasonably detailed written explanation of the basis for the dispute, and request the commencement of dispute resolution pursuant to Article XVI of this Interconnection Agreement. When the amount in dispute is equal to or greater than one million dollars ($1,000,000), the disputed amount shall be paid into an independent escrow account pending resolution of the dispute, at which time the prevailing Party shall be entitled to receive the disputed amount, as finally determined to be payable, along with interest accrued at the Interest Rate through the date on which payment is made, within ten (10) business days of such resolution. If the amount in dispute is less than one million dollars ($1,000,000), the disputing Party may withhold the disputed amount or pay the disputed amount into an independent escrow account pending resolution of the dispute, at which time the prevailing Party shall be entitled to receive the disputed amount, as finally determined to be payable, along with interest accrued at the Interest Rate through the date on which payment is made, within ten (10) business days of such resolution. The Parties may elect, but are not required, to agree to Alternative Dispute Resolution, including arbitration. Neither Party shall be responsible for the other Party's cost of collecting amounts due under this Interconnection Agreement, including attorney's fees.

ARTICLE X
NOTICES

Section 10.01 Notices. Any notice, demand, request, or communication required or authorized by this Interconnection Agreement shall be hand delivered or mailed by certified mail, return receipt requested, with postage prepaid, to Parties as set forth in Appendix B. In addition to the obligations set forth in the preceding sentence, a Party providing notice, demand, request or communication pursuant to this Section may also provide a courtesy copy of such notice, demand, request, or communication via electronic mail, or email. Any Party may update that portion of Appendix B that pertains to such Party's address by giving written notice to the other Parties of such change at any time.

ARTICLE XI
REGULATION AND MODIFICATION OF RATES

Section 11.01 Regulation. This Interconnection Agreement is subject to the jurisdiction of the FERC.

Section 11.02 Modification. Transmission Provider reserves its rights under Section 205 of the Federal Power Act to unilaterally make applications to FERC for modification of the rates, terms, conditions, classification of service, rule, or regulation for any service the Transmission Provider provides under this Interconnection Agreement and the attachments hereto over which FERC has jurisdiction. Interconnection Customer reserves its rights under Section 206 of the Federal Power Act to unilaterally make application to FERC for modification of the rates, terms, conditions, classification of service, rule, or regulation for any service provided under this Interconnection Agreement and the attachments hereto over which FERC has jurisdiction.

ARTICLE XII
ASSIGNMENT

Section 12.01 Successors and Assigns. This Interconnection Agreement shall be binding upon the respective Parties, their successors and permitted assigns, on and after the Effective Date hereof.

Section 12.02 Assignment Restrictions. This Interconnection Agreement may be assigned by either Party only with the written consent of the other; provided, however, that either Party may assign this Interconnection Agreement without the consent of the other Party to any Affiliate of the assigning Party with an equal or greater credit rating and with the legal authority and operational ability to satisfy the obligations of the assigning Party under this Interconnection Agreement; and provided further that Interconnection Customer shall have the right to assign this Interconnection Agreement, without the consent of Transmission Provider, for collateral security purposes to aid in providing financing, provided that Interconnection Customer promptly notifies Transmission Provider of any such assignment. Any financing arrangement entered into by Interconnection Customer pursuant to this Article XII will provide that prior to or upon the exercise of the secured party's, trustee's or mortgagee's assignment rights pursuant to said arrangement, the secured creditor, the trustee or mortgagee will notify Transmission Provider of the date and particulars of any such exercise of assignment right(s). Any attempted assignment that violates this Article XII is void and ineffective. Any assignment under this Interconnection Agreement shall not relieve a Party of its obligations, nor shall a Party's obligations be enlarged, in whole or in part, by reason thereof. Where requested, consent to assignment will not be unreasonably withheld, conditioned or delayed.

ARTICLE XIII
INSURANCE

Section 13.01 Applicability. If Interconnection Customer is a municipality, city, county, town, public authority or other political subdivision that qualifies for statutory limitations on liability under Applicable Law, Interconnection Customer shall procure and maintain, at its own expense, insurance coverages in accordance with the requirements set forth in Appendix F. In all other circumstances, Interconnection Customer shall comply with the requirements set forth in Section 13.02.

Section 13.02 Insurance. Each Party shall, at its own expense, maintain in force until this Interconnection Agreement is terminated and until released by the other Party, the following insurance coverages with insurers authorized to do business in the state where the Point of Interconnection is located:

(a) Employer's Liability and Workers' Compensation Insurance providing statutory benefits in accordance with the laws and regulations of the state in which the Point of Interconnection is located.

(b) Commercial General Liability Insurance including premises and operations, personal injury, broad form property damage, broad form blanket contractual liability coverage (including coverage for the contractual indemnification) products and completed operations coverage, coverage for explosion, collapse and underground hazards, independent contractors coverage, coverage for pollution to the extent normally available and punitive damages to

the extent normally available and a cross liability endorsement, with minimum limits of one million dollars ($1,000,000) per occurrence/one million dollars ($1,000,000) aggregate combined single limit for personal injury, bodily injury, including death and property damage.

(c) Comprehensive Automobile Liability Insurance for coverage of owned and non-owned and hired vehicles, trailers or semi-trailers designed for travel on public roads, with a minimum, combined single limit of one million dollars ($1,000,000) per occurrence for bodily injury, including death, and property damage.

(d) Excess Public Liability Insurance over and above the Employers' Liability Commercial General Liability and Comprehensive Automobile Liability Insurance coverage, with a minimum combined single limit of ten million dollars ($10,000,000) per occurrence/ ten million dollars ($10,000,000) aggregate.

(e) The Commercial General Liability Insurance, Comprehensive Automobile Insurance and Excess Public Liability Insurance policies shall name the other Party, its parent, associated and Affiliate companies and their respective directors, officers, agents, servants and employees ("Other Party Group") as additional insured. All policies shall contain provisions whereby the insurers waive all rights of subrogation in accordance with the provisions of this Interconnection Agreement against the Other Party Group and provide thirty (30) calendar days advance written notice to the Other Party Group prior to the anniversary date of cancellation or any material change in coverage or condition.

(f) The Commercial General Liability Insurance, Comprehensive Automobile Liability Insurance and Excess Public Liability Insurance policies shall contain provisions that specify that the policies shall apply to such extent without consideration for other policies separately carried. Each Party shall be responsible for its respective deductibles or retentions.

(g) The Commercial General Liability Insurance, Comprehensive Automobile Liability Insurance and Excess Public Liability Insurance policies, if written on a Claims First Made Basis, shall be maintained in full force and effect for two (2) years after termination of this Interconnection Agreement, which coverage may be in the form of tail coverage or extended reporting period coverage if agreed by the Parties.

(h) The requirements contained herein as to the types and limits of all insurance to be maintained by the Parties are not intended to and shall not in any manner, limit or qualify the liabilities and obligations assumed by the Parties under this Interconnection Agreement.

(i) Within ten (10) days following execution of this Interconnection Agreement, and as soon as practicable after the end of each fiscal year or at the renewal of the insurance policy and in any event within ninety (90) days thereafter, each Party shall provide certification of all insurance required in this Interconnection Agreement, executed by each insurer or by an authorized representative of each insurer.

(j) Notwithstanding the foregoing, each Party may self-insure to meet the minimum insurance requirements of subsections (a)-(h) of this Section 13.01 to the extent the Party maintains a self-insurance program; provided that, such Party's senior secured debt is rated at investment grade or better by Standard & Poor's and that its self-insurance program meets the minimum insurance requirements set forth in subsections (a)-(h) of this Section 13.01. For any period of time that a Party's senior secured debt is unrated by Standard and Poor's, such Party shall comply with the insurance requirements set forth in subsections (a)–(i) of this Section 13.01. In the event that a Party is permitted to self-insure pursuant to this

Article XIII, it shall notify the other Party that it meets the requirements to self-insure and that its self-insurance program meets the minimum insurance requirements in a manner consistent with that specified in this Section 13.01(j).

(k) The Parties agree to report to each other in writing as soon as practicable all accidents or occurrences resulting in injuries to any person, including death, and any property damage arising out of this Interconnection Agreement.

(l) In the event Interconnection Customer is a municipality or other governmental entity, Interconnection Customer will be subject to the insurance coverage obligations set forth in Appendix F in lieu of the insurance obligations set forth in this Section 13.02.

ARTICLE XIV
CONSEQUENTIAL DAMAGES, INDEMNITY AND RISK OF LOSS

Section 14.01 Waiver of Consequential Damages. In no event shall one Party, its governing board members, officers, employees or agents be liable to the other Party under this Interconnection Agreement from any cause howsoever arising in contract, tort or otherwise for any indirect, incidental, special, punitive, exemplary, or consequential damages, including but not limited to, loss of use, loss of revenue, loss of profit, and/or cost of replacement power, interest charges, cost of capital, claims of its customers to which service is made; provided, however, that damages for which a Party may be liable to the other Party under another agreement will not be considered to be special, indirect, incidental, punitive, exemplary or consequential damages hereunder.

Section 14.02 Indemnity. Each Party shall at all times indemnify, defend and hold harmless the other Party, its shareholders, members, partners, Affiliates, employees, consultants, representatives, agents, successors and permitted assigns ("Indemnified Party") from any and all liability, damages, losses, claims, including claims and actions relating to injury to or death of any person or damage to property, demand, suits, recoveries, costs and expenses, court costs, attorney fees, and all other obligations by or to third parties, arising out of or resulting from the other Party's ("Indemnifying Party") negligence, or action or inactions of its obligations under this Interconnection Agreement, except in cases of negligence, gross negligence or intentional wrongdoing by the Indemnified Party. Nothing in this Section 14.02 shall relieve the Transmission Provider or Interconnection Customer of any liability to the other for any breach of this Interconnection Agreement.

(a) If an Indemnified Party is entitled to indemnification under this Section 14.02 as a result of a claim by a third party, and the Indemnifying Party fails, after notice and reasonable opportunity to proceed, to assume the defense of such claim, the Indemnified Party may at the expense of the Indemnifying Party contest, settle or consent to the entry of any judgment with respect to, or pay in full, such claim.

(b) If an Indemnifying Party is obligated to indemnify and hold any Indemnified Party harmless under this Section 14.02, the amount owing to the Indemnified Party shall be the amount of such Indemnified Party's loss net of any insurance or other recovery.

(c) Promptly after receipt by an Indemnified Party of any claim or notice of the commencement of any action or administrative or legal proceeding or investigation as to which the indemnity provided in this Section 14.02 may apply, the Indemnified Party shall notify the Indemnifying Party of such fact. Any failure of or delay in such notification shall not affect the Indemnifying Party's obligation to indemnify the Indemnified Party unless such failure or delay is materially prejudicial to the Indemnifying Party.

(d) In the event Indemnifying Party is a municipality or other governmental entity, Indemnifying Party will be subject to the indemnification obligations set forth in Appendix F in lieu of the indemnification obligations set forth in this Section 14.02.

Section 14.03 Risk of Loss. Except under situations of negligence, gross negligence, or intentional wrong-doing by the other Party, each Party shall have the full risk of loss for its own property and material, and each Party shall (subject to Article XIII) obtain and maintain insurance coverage accordingly under its own insurance and risk management procedures. To the extent permitted by each Party's insurer, at no additional cost to that Party, each Party shall require its property insurer to waive the right of subrogation. Each Party shall have title and risk of loss for those materials or capital equipment purchased for its ownership by the other Party as an authorized agent under this Interconnection Agreement confirmed by written confirmation and approval of supplier, specifications, equipment warranty, delivery and installation arrangements (the principal being entitled to any sales tax exemptions). All such equipment and materials will be inspected by the purchasing agent Party upon delivery and damaged or nonconforming equipment or materials will be rejected and returned to the seller upon consultation and agreement with the Party for whom the equipment was purchased.

ARTICLE XV
DEFAULT AND TERMINATION

Section 15.01 Default by Interconnection Customer.

(a) In the event the Interconnection Customer fails, for any reason other than a billing dispute as described in Section 9.03, to make payment to Transmission Provider on or before the due date as described herein, and such failure of payment is not cured within thirty (30) calendar days after Transmission Provider notifies Interconnection Customer of such failure, a default by Interconnection Customer shall be deemed to exist.

In the event of an uncured default by Interconnection Customer for nonpayment, except when nonpayment is the subject of a billing dispute as provided in Section 9.03, Transmission Provider may initiate a proceeding with the FERC to terminate service but shall not terminate service until the FERC so approves any such request. In the event of a billing dispute between Transmission Provider and Interconnection Customer, Transmission Provider will continue to provide service under this Interconnection Agreement as long as the Interconnection Customer (1) continues to make all payments not in dispute, and (2) subjection to Section 9.03, pays into an independent escrow account the portion of the invoice in dispute, pending resolution of such dispute. If Interconnection Customer fails to meet these two requirements for continuation of service, then Transmission Provider may provide notice to the Interconnection Customer of its intention to suspend service in accordance with the Tariff or FERC policy.

(b) Interconnection Customer shall also be in default if it materially breaches any other provision of this Interconnection Agreement, and fails to cure any such breach within thirty (30) days after written notice by Transmission Provider of the existence and nature of such alleged breach.

(c) If Interconnection Customer assigns its interests under this Interconnection Agreement to a bank, lender or other financial institution for purposes of obtaining financing ("Financing Party"), and Interconnection Customer notifies Transmission Provider of this assignment and the information necessary for Transmission Provider to contact Financing Party, then Transmission Provider shall also notify Financing Party of any breach or default by Interconnection Customer under this Interconnection Agreement at the same time as it notifies Interconnection Customer of such breach or default. If Financing Party elects to cure the breach or default, by payment or otherwise, then Transmission Provider agrees to accept such cure by Financing Party as if the same had been effected by Interconnection Customer.

Section 15.02 Default by Transmission Provider. Transmission Provider shall be considered in default if it fails to make any payment due to Interconnection Customer hereunder, or fails to cure any material breach, within thirty (30) days after written notice of nonpayment or material breach from Interconnection Customer.

Section 15.03 Termination for Default. Should a Party fail to cure a default within the applicable cure period, and the default is not contested pursuant to the dispute resolution process provided in Section 16.01 or other legal processes, the non-defaulting Party shall have the right to terminate this Interconnection Agreement subject to FERC approval and other defenses by giving written notice to the Party in default, and be relieved of any further obligation hereunder, and whether or not the non-defaulting Party terminates this Interconnection Agreement, to recover from the defaulting Party all amounts due hereunder, plus all other damages and remedies to which the non-defaulting Party is entitled subject to the limitations set forth in Article XIV of this Interconnection Agreement. The provisions of this Article XV shall survive termination of this Interconnection Agreement.

ARTICLE XVI
DISPUTE RESOLUTION

Section 16.01 Dispute Resolution Process. In the event the Parties are required by this Interconnection Agreement or mutually agree to try and resolve a dispute, the Parties shall first refer the dispute to designated senior representatives, with authority to bind their respective Party, for resolution on an informal basis as promptly as practicable. In the event the designated representatives are unable to resolve the dispute within thirty (30) days, or such other period as the Parties may mutually agree, such dispute may either be submitted to the alternative dispute resolution provisions set out in Article 12 of the Tariff, if agreed to by the Parties, or the aggrieved Party may initiate legal proceedings at the Commission or court of competent jurisdiction.

ARTICLE XVII
CONFIDENTIAL INFORMATION

Section 17.01 Furnishing of Information. It is recognized by the Parties that the successful operation of this Interconnection Agreement depends upon the cooperation by the Parties in the operation of their systems. As a part of such cooperation, subject to the limitations regarding disclosing confidential information provided in this Interconnection Agreement, each Party agrees that it will furnish to the other Party such data concerning its system as may be necessary to support the other Party's system reliability.

Section 17.02 Confidential Information.

(a) "Confidential Information" means (1) any confidential, proprietary or trade secret information of a plan, specification, pattern, procedure, design, device, drawing, list, concept, customer information, policy or compilation relating to the present or planned business of a Party, which is designated as Confidential Information by the Party supplying the information, whether conveyed orally, electronically, in writing, through inspection, or otherwise; or (2) any Critical Energy Infrastructure Information. Confidential Information which includes, without limitation, all information relating to a Party's technology, research and development, business affairs, and pricing, and any information supplied by a Party to another Party on a confidential basis prior to the execution of this Interconnection Agreement.

(b) Confidential Information shall not include information that the receiving Party can demonstrate: (1) is generally available to the public other than as a result of a

disclosure by the receiving Party; (2) was in the lawful possession of the receiving Party on a non confidential basis before receiving it from the disclosing Party; (3) was supplied to the receiving Party without restriction by a third party, who, to the knowledge of the receiving Party, was under no obligation to the other Party to keep such information confidential; (4) was independently developed by the receiving Party without reference to Confidential Information of the disclosing Party; or (5) is, or becomes, publicly known, through no wrongful act or omission of the receiving Party or breach of this Interconnection Agreement.

Information designated as Confidential Information will no longer be deemed confidential if the Party that designated the information as Confidential Information notifies the other Parties that such information no longer is confidential.

(c) Information is Confidential Information only if it is clearly designated or marked in writing as confidential on the face of the document; or, if the information is conveyed orally or by inspection, the Party providing the information orally informs the receiving Party that the information is confidential. Each Party shall be responsible for clearly designating or marking information governed by FERC's Critical Energy Infrastructure Information rules and regulations.

Section 17.03 Protection of Confidential Information.

(a) No Party shall disclose any Confidential Information of the other Party obtained pursuant to or in connection with the performance of this Interconnection Agreement to any third party without the express written consent of the providing Party; provided, however, that any Party may produce Confidential Information in response to a subpoena, discovery request or other compulsory process issued by a judicial body or Governmental Authority upon reasonable notice to the providing Party that (a) a protective order from such jurisdictional judicial body or court has been issued relating to the Confidential Information; and (b) a binding nondisclosure agreement is in effect with a proposed recipient of any Critical Energy Infrastructure Information.

(b) The Parties shall use at least the same standard of care to protect Confidential Information they receive as they use to protect their own Confidential Information from unauthorized disclosure, publication or dissemination.

(c) Any Party may use Confidential Information solely: (1) to fulfill its obligations to the other Party, under this Interconnection Agreement; (2) to fulfill its regulatory requirements except to the extent that such information constitutes or has been designated Critical Energy Infrastructure Information; (3) in any proceeding or in any administrative agency or court of competent jurisdiction addressing any dispute arising under this Interconnection Agreement, subject either to a written confidentiality agreement with all Parties (including, if applicable, an arbitrator(s)) or to a protective order; or (4) as required by Applicable Law. As it pertains to (3) and (4), notwithstanding the absence of a protective order or waiver, a Party may disclose such Confidential Information which, in the opinion of its counsel, the Party is legally compelled to disclose. In the event that the receiving Party is legally requested or required (by oral questions, interrogatories, requests for information or documents, subpoena, civil investigative demand or similar process, or in the opinion of its counsel, by federal or state securities or other statutes, regulations or

laws) to disclose any Confidential Information, the receiving Party shall, to the extent permitted under applicable law, promptly notify the disclosing Party of such request or requirement prior to disclosure, so that the disclosing Party may seek an appropriate protective order and/or waive compliance with the terms of this Interconnection Agreement and shall request confidential treatment of any such disclosure.

(d) The Parties agree that monetary damages by themselves may be inadequate to compensate a Party for the other Party's breach of its obligations under this Article. Each Party accordingly agrees that the other Parties are entitled to equitable relief, by way of injunction or otherwise, if it breaches or threatens to breach its obligations under this Article.

Section 17.04 Survival. The confidentiality obligations of this Article shall survive termination of this Interconnection Agreement for a period of two (2) years.

ARTICLE XVIII
MISCELLANEOUS

Section 18.01 Third Party Contracts. The Parties recognize that each has entered into and may in the future enter into contractual commitments with various third parties regarding benefits, use and operation of network transmission facilities it owns within the interconnected regional transmission network. Each Party hereby covenants that its respective contracts with third parties shall not interfere with its obligations to the other Party made under this Interconnection Agreement.

Section 18.02 No Residual Value. This Interconnection Agreement shall not be construed to provide any residual value to either Party or its successors or permitted assigns or any other party, for rights to, use of, or benefits from the other Party's system following expiration of this Interconnection Agreement.

Section 18.03 No Third Party Beneficiary. Unless otherwise specifically provided in this Interconnection Agreement, the Parties do not intend to create rights in or to grant remedies to any third Party as a beneficiary of this Interconnection Agreement or of any duty, covenant, obligation or undertaking established hereunder.

Section 18.04 Headings. Article headings and titles are included for the convenience of Parties and shall not be used to construe the meaning of any provision of this Interconnection Agreement.

Section 18.05 Governing Law. This Interconnection Agreement shall be interpreted and governed by the laws of the state in which the Point of Interconnection is located, or the laws of the United States of America, as applicable.

Section 18.06 Effect of MISO Membership. In the event, during the term hereof, Transmission Provider ceases to be a transmission owning member of a MISO or a successor, all terms and conditions with respect to MISO, or successor(s) herein shall remain in force until amended. Transmission Provider shall be responsible for filing with FERC any modifications to this Interconnection Agreement necessary as a result of such action.

Section 18.07 No Joint System. The Parties each own and operate separate interconnected electric systems, and no provision of the Interconnection Agreement shall be interpreted to mean or imply the Parties have established or intend to establish a jointly-owned electric system, a joint venture, trust, a partnership, or any other type of association.

Section 18.08 Relationship to MISO Tariff. Nothing contained herein shall modify, amend or revise the obligations of the Parties under the MISO Tariff.

Section 18.09 Amendment. Except as provided in Section 11.02, any amendment, alteration, variation, modification or waiver of the provisions of this Interconnection Agreement, other than revisions to the Appendices authorized by this Interconnection Agreement, shall be valid only after it has been reduced to writing and duly signed by both Parties, and if required, approved by the appropriate regulatory bodies.

Section 18.10 Conflicts. In the event any term of this Interconnection Agreement conflicts with the Tariff, the terms of this Interconnection Agreement shall control.

Section 18.11 Waiver. The failure of either Party to enforce or insist upon compliance with or strict performance of any of the terms or conditions of this Interconnection Agreement, or to take advantage of any of its rights thereunder, shall not constitute a waiver or relinquishment of any such terms, conditions, or rights, but the same shall be and remain at all times in full force and effect.

Section 18.12 Counterparts. This Interconnection Agreement may be executed in any number of counterparts, and each executed counterpart shall have the same force and effect as an original instrument.

Section 18.13 Severability. If any governmental authority or court of competent jurisdiction holds that any provision of this Interconnection Agreement is invalid, or if, as a result of a change in any Federal or State law or constitutional provision, or any rule or regulation promulgated pursuant thereto, any provision of this Interconnection Agreement is rendered invalid or results in the impossibility of performance thereof, the remainder of this Interconnection Agreement not affected thereby shall continue in full force and effect. In such an event, the Parties shall promptly renegotiate in good faith new provisions to restore this Interconnection Agreement as nearly as possible to its original intent and effect.

SIGNATURES

In Witness Whereof, the Parties have caused this Interconnection Agreement to be duly executed as of this 9th day of January_____ 2015.

CITY OF KASOTA
A Minnesota municipal corporation

By: */s/ Sheila LeRoss*_____

Name: Sheila LeRoss_____

Title: City Clerk_____

Date: 12/29/14_____

NORTHERN STATES POWER COMPANY,
A Minnesota corporation, and
NORTHERN STATES POWER COMPANY,
A Wisconsin corporation

By: */s/ I.R. Benson*_____

Name: Ian R. Benson_____

Title: Director, Transmission Planning & Business Relations

Date: 1/9/2015_____

Xcel Energy Services Inc.
Authorized Agent

APPENDIX A

IDENTIFICATION OF POINTS OF INTERCONNECTION AND FACILITIES

A-1: Kasota Distribution - Point of Interconnection # 1 (POI # 1)

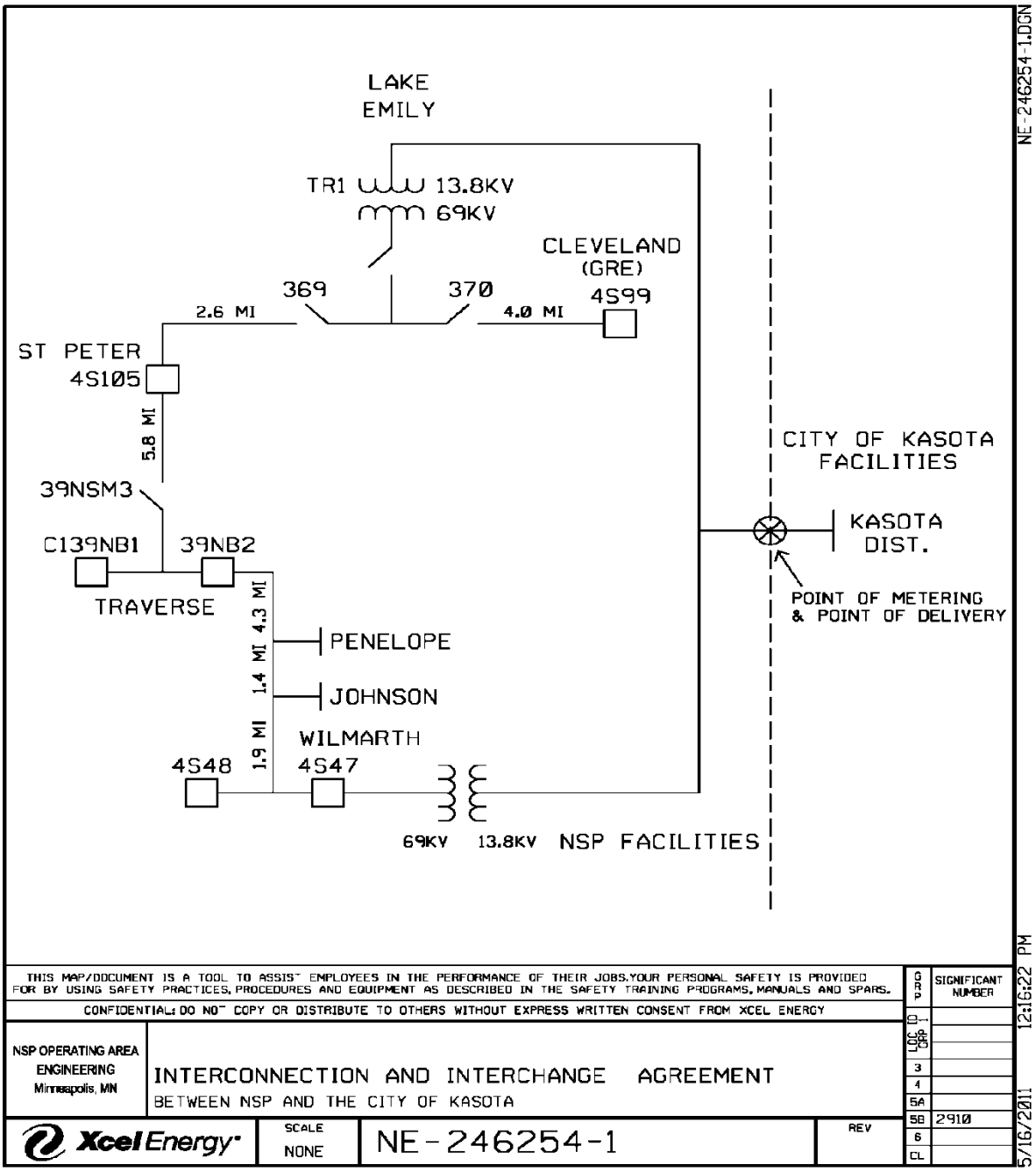

APPENDIX A-1

Point of Interconnection # 1 (POI # 1): Kasota Distribution

This Point of Interconnection is located at the connecting hardware where the NSPM-owned 13.8kV facilities between NSPM-owned Wilmarth and Lake Emily substations interconnect with the Interconnection Customer-owned 13.8kV facilities as shown in Appendix A.

The location for this Point of Interconnection is as follows: a point located approximately 1/4 mile west of the intersection of W. Cherry Street and Ridgely Street, City of Kasota, MN with legal description as the SE¼ of the NE¼ of Section 32, Township 110N., Range 26W., County of Le Sueur, State of Minnesota.

The transfer of power and energy at the point of metering shall be measured at the Interconnection Customer distribution voltage by a recording 15-minute integrated demand watt-hour meter and a var-hour meter or by digital metering equipment of equivalent capability. Meters and associated metering equipment shall be provided, owned, and maintained by NSPM. The Interconnection Customer shall provide and install conduit and support for the metering transformers. The metering transformers and color code metering wire, provide by NSPM shall be installed by the Interconnection Customer.

The meter readings shall be compensated to account for transformation losses to the 69kV voltage. The compensation shall be done by multiplying the energy flows by 1.01, unless otherwise agreed.

For MDMA purposes, NSPM shall provide metered data to MISO based on NSPM's meter readings.

The applicable Interconnection Provisions for Point of Interconnection # 1 are set forth in Appendix E-1.

APPENDIX B

NOTICES

Any notice, demand, request, or communication required or authorized by this Interconnection Agreement shall be hand delivered or mailed by certified mail, return receipt requested, with postage prepaid, to Parties, and may also provide a courtesy copy of such notice, demand, request, or communication via electronic mail, or email, as follows:

For Customer:

City of Kasota - Electric Light Department
Superintendent
P.O. Box 218
Kasota, MN 56050

For Transmission Provider:

Xcel Energy
Manager, Transmission Business Relations
414 Nicollet Mall, MP 8
Minneapolis, MN 55401

For Invoices:

City Clerk
City of Kasota - Electric Light Department
P.O. Box 218
Kasota, MN 56050

Transmission Finance
Xcel Energy – Transmission
1800 Larimer, 12th floor
Denver, CO 80202
303-571-2782

For Operational Matters:

Superintendent
City of Kasota - Electric Light Department
507-931-3290

Transmission Control Center (MN)
Northern States Power Company
612-321-7431

This designation and titles of the person to be notified or the address of such person may be changed at any time by written notice.

APPENDIX C

Template for Adding a New Point of Interconnection

The Parties understand that it may be necessary to add a Point of Interconnection. Should the Parties agree to add a Point of Interconnection, Interconnection Customer and Transmission Provider shall use the following form or another that is substantially similar to it for purposes of documenting their mutual agreement and to update the Point of Interconnection described in Appendix A to this Interconnection Agreement:

Facilities are located in_____

Included hereafter are the Interconnection Provisions and Interconnection Diagram for this Point of Interconnection and a completed Appendix E documenting the respective responsibilities of the Parties.

The costs of such Facilities shall be borne by Interconnection Customer or Transmission Provider as provided in Attachment U-1 to the Tariff.

In Witness Whereof, the Parties have confirmed these Interconnection Provisions to become part of Transmission to Load Interconnection Agreement between the Parties dated _____ __, 20__, and to be duly executed as of this ____ day of _____, 20___.

CITY OF KASOTA
A Minnesota municipal corporation

By: _____

Name: _____

Title: _____

Date: _____

NORTHERN STATES POWER COMPANY
A Minnesota corporation and
NORTHERN STATES POWER COMPANY,
A Wisconsin corporation

By: _____

Name: _____

Title: _____

Date: _____

By Xcel Energy Services Inc.
Authorized Agent

APPENDIX D

Template for Modifying or Removing
Point of Interconnection

The Parties understand that it may be necessary to modify or remove Point of Interconnection. Should the Parties agree to modify or remove, Interconnection Customer and Transmission Provider shall use the following form or another that is substantially similar to it for purposes of documenting their mutual agreement and to update the Point of Interconnection described in Appendix A to this Interconnection Agreement:

Facilities are located in_____

Included hereafter are the Interconnection Provisions and Interconnection Diagram for this Point of Interconnection and a completed Appendix E documenting the respective responsibilities of the Parties.

The costs of such Facilities shall be borne by Interconnection Customer or Transmission Provider as provided in Attachment U-1 to the Tariff.

In Witness Whereof, the Parties have confirmed these Interconnection Provisions to become part of Transmission to Load Interconnection Agreement between the Parties dated _____ __, 20__, and to be duly executed as of this ____ day of _____, 20___.

CITY OF KASOTA
A Minnesota municipal corporation
By: _____

Name: _____

Title: _____

Date: _____

NORTHERN STATES POWER COMPANY
A Minnesota corporation and
NORTHERN STATES POWER COMPANY,
A Wisconsin corporation

By: _____

Name: _____

Title: _____

Date: _____

By Xcel Energy Services Inc.
Authorized Agent

APPENDIX E-1

INTERCONNECTION PROVISIONS

KASOTA DISTRIBUTION FACILITIES AND
RELATED TRANSMISSION SYSTEM MODIFICATIONS
OWNERSHIP, OPERATION AND MAINTENANCE PROVISIONS

Description	Owner	Operator	Maintenance Responsibility	Financial Responsibility For Construction	Financial Responsibility For O&M	Financial Responsibility For Replacement	Responsibility to Accomplish Engineering Design and Construction
SUBSTATION							
Wilmarth 69kV-13.8kV facilities between Wilmarth Substation and Lake Emily Substation.	NSPM	NSPM	NSPM	NSPM	NSPM	NSPM	NSPM
Kasota 13.8kV distribution facilities.	IC	IC	IC	IC	IC	IC	IC
Oil Switches and Voltage Regulators	IC	IC	IC	IC	IC	IC	IC
TRANSMISSION							
69kV Transmission Line W0715.	NSPM	NSPM	NSPM	NSPM	NSPM	NSPM	NSPM
METERING &TELEMETRY							
Metering equipment, instrument transformers and ancillary equipment (meter wiring & meter socket).	IC	IC	IC	IC	IC	IC	IC
Billing meter for POI # 1 measured at IC's distribution voltage.	NSPM	NSPM	NSPM	NSPM	NSPM	NSPM	NSPM
Communication line including	IC	IC	IC	IC	IC	IC	IC

monthly charge.							

NSPM = Northern States Power Company Minnesota, IC = Interconnection Customer

APPENDIX F-1

INSURANCE AND INDEMNIFICATION OBLIGATIONS FOR A MINNESOTA MUNICIPALITY

10. Insurance Coverages. If Interconnection Customer is subject to Minn. Stat. § 466.04, as amended from time to time, or any successor statute, Interconnection Customer shall, at its own expense, maintain in force until this Interconnection Agreement is terminated or until released by Transmission Provider, insurance coverages equal to the maximum limitation on liabilities set forth in Minn. Stat. § 466.04.

    Interconnection Customer shall use its best efforts to ensure that Transmission Provider and its parent, associated and Affiliate companies and their respective directors, officers, agents, servants and employees shall be named as an additional insured under Interconnection Customer's Commercial General Liability Insurance policy, at Transmission Provider's expense, if any, for all incremental costs. The additional insured coverage for Transmission Provider shall be up to $500,000 per claimant, and $1,500,000 for all claims arising out of a single occurrence (or other amounts, if higher, consistent with the Interconnection Customer's policy and state law), without diminishing Interconnection Customer's ability to recover its own liabilities under the policy.

    In the event that Interconnection Customer cannot obtain such insurance coverage for the Transmission Provider and its parent, associated and Affiliate companies and their respective directors, officers, agents, servants and employees, or in the event that such coverage would be at an unacceptably high expense to Transmission Provider, then the Parties shall make good-faith efforts to negotiate mutually agreeable alternative arrangements.

    Notwithstanding the foregoing, nothing herein shall prevent Transmission Provider and Interconnection Customer from agreeing to different insurance limits from those provided in this Appendix F-1. In such a case, the Parties shall set forth the mutually agreed-to insurance coverages in this Appendix F-1.

11. Indemnification. Subject to any applicable Minnesota law or statute limiting the indemnification obligations of Interconnection Customer to Transmission Provider, Interconnection Customer shall at all times indemnify, defend and hold harmless Transmission Provider, its shareholders, members, partners, Affiliates, employees, consultants, representatives, agents, successors and permitted assigns ("Indemnified Party") from any and all liability, damages, losses and claims, including claims and actions relating to injury to or death of any person or damage to property, demand, suits, recoveries, costs and expenses, court costs, attorney fees and all other obligations by or to third parties, arising out of or resulting from Interconnection Customer's ("Indemnifying Party") negligence, or action or inactions of its obligations under this Interconnection Agreement, except in cases of negligence, gross negligence or intentional wrongdoing by the Indemnified Party.

    Interconnection Customer's obligations to Transmission Provider under this paragraph shall be limited to $1,500,000 per occurrence.

APPENDIX G

SERVICE SCHEDULE
DISTRIBUTION SUBSTATION FACILITIES CHARGE RIDER
CITY OF KASOTA

1.0 Service.

This Service Schedule provides service where Transmission Provider provides the distribution substation and all required associated facilities at the Point of Interconnection to provide delivery at Interconnection Customer's primary distribution voltage. Transmission Provider shall furnish an adequate step-down substation to deliver Interconnection Customer's purchases of power and energy from the Point of Interconnection. This Service Schedule shall be effective for an initial period of ten years, if not then terminated in accordance with Section 3.01, it shall remain in full force and effect until so terminated.

2.0 Rates and Charges.

(a) Monthly Facilities Charge: Interconnection Customer shall pay Transmission Provider a monthly Facilities Charge in an initial amount of $406.00 commencing May 30, 1995. This Revision No. 2 of this Service Schedule reflects only the FERC accepted charges. Any future proposed revisions to this Service Schedule will be filed at the FERC along with the appropriate cost support.

(b) Notwithstanding Section 2.0(a) of this Service Schedule, in the event that additional investments are made by NSP to improve or expand Transmission Provider's Lake Emily Substation or the intermediary Transmission Provider distribution system, the Facilities Charge will be re-determined in proportion to the ratio of Interconnection Customer's peak load to the sum of the Parties' peak load.

3.0 Billing and Payment.

(a) Unless otherwise agreed, bills for services provided hereunder shall be rendered by the fifth working day of each month for services provided during the previous month. Interconnection Customer's payment to Transmission Provider shall be due, if by mail, at Transmission Provider's billing office, or if by wire transfer to a bank and account named by Transmission Provider, no later than 15 days following the date of such invoice.

(b) Late Payment Charge: Payments received after the due date shall be considered late and shall bear interest on the payment in accordance with Section 9.02.

4.0 List of Substation Facilities.

This Distribution Substation Facilities Charge allows Interconnection Customer to utilize the following Transmission Provider facilities:

Transmission Provider's 69-13.8 kV transformation facilities and 13.8 kV distribution line between NSP's Wilmarth and Lake Emily substations and the Interconnection Customer Distribution Point of Interconnection described in Appendix A.

Ada-Trans to Load-Non-conforming Version:0.0.0 Effective:1/1/2015

Service Agreement No. 583-NSP

Service Agreement for Transmission to Load Interconnection Service

Between

Northern States Power Company, a Minnesota corporation,

Northern States Power Company, a Wisconsin corporation

and

City of Ada, a Minnesota municipal corporation

Dated as of May 8, 2015

VERSION 0.0.0.

TABLE OF CONTENTS

ARTICLE I DEFINITIONS 5

Section 1.01 .....Rules of Construction 5

Section 1.02 ..... Good Faith and Fair Dealing 6

Section 1.03 .....General Provisions 6

Section 1.04 .....Definitions 7

ARTICLE II SCOPE 10

Section 2.01 .....Scope of Interconnection Agreement 10

Section 2.02 Facilities Served 11

ARTICLE III TERMS AND TERMINATION 11

Section 3.01 ..... Term 11

Section 3.02 .....Early Termination 11

Section 3.03 .....Survival 11

ARTICLE IV OWNERSHIP, CONSTRUCTION, OPERATION AND MAINTENANCE.....12

Section 4.01 .....Summary Description 12

Section 4.02 Interconnection Customer Interconnection Facilities and System Protection Facilities..... 12

Section 4.03 .....Transmission Provider Interconnection Facilities 12

Section 4.04 ..... Network Upgrades 12

Section 4.05 ..... Modifications to Interconnection Facilities 13

Section 4.06Ownership of Transmission Provider Interconnection Facilities and Network Upgrades 14

Section 4.07 .....Construction 14

Section 4.08 .....Reliability Standards 14

Section 4.09 ..... Interconnection Guidelines 14

Section 4.10 .....Power Factor 15

Section 4.11 .....Meter Data Management 15

Section 4.12 ..... Access 15

Section 4.13 .....Right of Installation 16

Section 4.14 .....Right of Removal 16

Section 4.15 .....Transfer of Control or Sale of Facilities 16

ARTICLE V OUTAGES AND COORDINATION 16

Section 5.01 ..... Disconnection 16

Section 5.02 ..... Outages 16

Section 5.03 .....Outage Reporting 17

Section 5.04 .....Switching and Tagging Rules 17

Section 5.05 .....Coordination 17

Section 5.06 .....Emergency 18

ARTICLE VI SAFETY 19

Section 6.01 .....Safety Standards 19

ARTICLE VII ENVIRONMENTAL CONSIDERATIONS.....19

Section 7.01 .....Environmental Considerations 19

ARTICLE VIII FORCE MAJEURE.....20

Section 8.01 ..... Effect of Declaring Force Majeure 20

Section 8.02 ..... Procedures for Declaring Force Majeure 20

ARTICLE IX BILLING AND PAYMENT 20

Section 9.01 ..... Billing Procedure 20

Section 9.02 .....Interest on Unpaid Balances 20

Section 9.03 .....Billing Disputes 20

ARTICLE X NOTICES 21

Section 10.01 .....Notices 21

ARTICLE XI REGULATION AND MODIFICATION OF RATES.....21

Section 11.01 .....Regulation 21

Section 11.02 .....Modification 21

ARTICLE XII ASSIGNMENT.....21

Section 12.01 ..... Successors and Assigns 21

Section 12.02 .....Assignment Restrictions 21

ARTICLE XIII INSURANCE 22

Section 13.01 .....Applicability 22

Section 13.02 .....Insurance 22

ARTICLE XIV CONSEQUENTIAL DAMAGES, INDEMNITY AND RISK OF LOSS.....23

Section 14.01 ..... Waiver of Consequential Damages 23

Section 14.02 ..... Indemnity 24

Section 14.03 ..... Risk of Loss 24

ARTICLE XV DEFAULT AND TERMINATION ……24

Section 15.01 .....Default by Interconnection Customer 24

Section 15.02 .....Default by Transmission Provider 25

Section 15.03 .....Termination for Default 25

ARTICLE XVI DISPUTE RESOLUTION 26

Section 16.01 .....Dispute Resolution Process 26

ARTICLE XVII CONFIDENTIAL INFORMATION.....26

Section 17.01 .....Furnishing of Information 26

Section 17.02 ..... Confidential Information 26

Section 17.03 ..... Protection of Confidential Information 27

Section 17.04 ..... Survival 27

ARTICLE XVIII MISCELLANEOUS 27

Section 18.01 ..... Third Party Contracts 27

Section 18.02 ..... No Residual Value 28

Section 18.03 ..... No Third Party Beneficiary 28

Section 18.04 ..... Headings 28

Section 18.05 ..... Governing Law 28

Section 18.06 ..... Effect of MISO Membership 28

Section 18.07 ..... No Joint System 28

Section 18.08 ..... Relationship to MISO Tariff 28

Section 18.09 ..... Amendment 28

Section 18.10 ..... Conflicts 28

Section 18.11 ..... Waiver 28

Section 18.12 ..... Counterparts 28

Section 18.13 ..... Severability 28

SIGNATURES 30

APPENDICES
……31

This TRANSMISSION TO LOAD INTERCONNECTION AGREEMENT ("Interconnection Agreement") is dated as of this 8th day of May, 2015, between City of Ada, Minnesota, a municipal corporation in the County of Norman, State of Minnesota, hereinafter called "Interconnection Customer", and Northern States Power Company, a Minnesota corporation ("NSPM") and Northern States Power Company, a Wisconsin corporation ("NSPW"), hereinafter jointly called "NSP" or "Transmission Provider". For purposes of this Interconnection Agreement, "Party" shall mean Interconnection Customer or Transmission Provider, and "Parties" shall mean Interconnection Customer and Transmission Provider.

RECITALS

0.01 **WHEREAS,** NSPM and NSPW are, *inter alia*, investor-owned electric utilities engaged in the business of generating, transmitting, distributing, and selling electric power and energy and related services in the States of Minnesota, North Dakota, South Dakota, Wisconsin and Michigan subject to, *inter alia*, the jurisdiction of the Federal Energy Regulatory Commission ("FERC"); and

0.02 **WHEREAS**, NSPM and NSPW operate an integrated electric transmission system ("NSP System" or "Transmission Provider's Transmission System") pursuant to the "Restated Agreement to Coordinate Planning and Operations and Interchange Power and Energy" between NSPM and NSPW ("Interchange Agreement"); and

0.03 **WHEREAS**, Transmission Provider has filed and the FERC has accepted the Xcel Energy Operating Companies Open Access Transmission Tariff ("Tariff"), as amended or supplemented from time to time, through which interconnection service to Interconnection Customer is to be provided; and

0.04 **WHEREAS,** Interconnection Customer is a municipal utility and owns and operates load serving electric distribution facilities in the State of Minnesota; and

0.05 **WHEREAS,** Interconnection Customer desires interconnection service at the Interconnection Customer's Interconnection Facilities; and

0.06 **WHEREAS**, the Parties agree to execute this Interconnection Agreement to provide the terms and conditions for interconnection of Interconnection Customer's facilities with Transmission Provider's electrical system and to define the continuing rights, responsibilities, and obligations of the Parties with respect to the use of certain of their own and the other Party's property, assets, and facilities; and

0.07 **WHEREAS**, the Parties desire to avail themselves of mutual benefits of coordinating the development and operations of their respective systems with respect to the Interconnection Facilities.

NOW THEREFORE, the Parties agree as follows:

ARTICLE I
DEFINITIONS

Section 1.01 Rules of Construction

Capitalized terms used in this Interconnection Agreement shall have the meanings set forth above, in this Article I, or as set forth in the Tariff, whether in the singular or the plural or in the present or past tense. Other terms used in this Interconnection Agreement but not so defined shall have meanings as commonly used in the English language and, where applicable, in Good Utility Practice. Words not otherwise defined herein that have well-known and generally accepted technical or trade meanings are used herein in accordance with such recognized meanings.

Section 1.02 Good Faith and Fair Dealing

The Parties shall act reasonably and in accordance with the principles of good faith and fair dealing in the performance of this Interconnection Agreement. Unless expressly provided otherwise in this Interconnection Agreement or in the Tariff, (a) where the consent, approval, or similar action is required by a Party, such consent or approval shall not be unreasonably withheld, conditioned or delayed; and (b) wherever a Party has the right to determine, require, specify or take similar action with respect to a matter, such determination, requirement, specification or similar action shall be reasonable.

Section 1.03 General Provisions

The Parties recognize and agree that this Interconnection Agreement is entered into pursuant to and in accordance with NSP's obligations as a Transmission Provider under the Tariff and that NSP is acting in such capacity in entering into this Interconnection Agreement.

(a) In the event Interconnection Customer enters into any agreements with NSP or an Affiliate that are not in NSP's capacity as a Transmission Provider under the Tariff (*e.g.*, power purchase or retail service agreements), the Parties acknowledge and agree that such agreements shall be deemed to be separate and free-standing contracts that do not alter the terms of this Interconnection Agreement except to the extent specified therein.

(b) This Interconnection Agreement shall not be construed to create any rights between Interconnection Customer and Transmission Provider for any purpose other than providing Interconnection Service for the facilities described herein. Specifically, this Interconnection Agreement does not provide Interconnection Customer with any transmission, ancillary or other services under the Tariff.

(c) This Interconnection Agreement shall apply to interconnections of load and distribution systems, including, as applicable, generation resources (i) used to serve load which are interconnected to Interconnection Customer's distribution facilities and (ii) located on Interconnection Customer's side of the Point of Interconnection to the Transmission Provider's Transmission System. This Interconnection Agreement shall not apply to interconnections which materially support the transmission of electricity across Transmission Provider's Transmission System. The determination of whether this Interconnection Agreement applies to an interconnection request shall be made by Transmission Provider, in its sole reasonable discretion, on a comparable and non-discriminatory basis in accordance with Good Utility Practice.

(d) Except to the extent precluded by an Emergency, Force Majeure, Forced Outage or compliance with Applicable Law (including for the avoidance of doubt those necessary to comply with Reliability Standards), Transmission Provider shall reasonably consult with Interconnection Customer, and as appropriate negotiate an amendment to this Agreement, whenever (i) Transmission Provider requires Interconnection Customer to add, modify or improve its facilities that are the subject of this Interconnection Agreement; or (ii) Transmission Provider requires Interconnection Customer to change its operation standards or practices, or operation of facilities that are the subject of this Interconnection Agreement, including curtailment procedures or practices. The requirements set forth in (i) and (ii) in the preceding sentence shall be applied on a comparable, just and reasonable and non-discriminatory basis in accordance with Good Utility Practice, as applicable, and Attachment U-1, as applicable.

(e) Any costs allocated to Interconnection Customer by Transmission Provider under this Agreement shall be in accordance with Attachment U-1 of the Tariff.

Section 1.04 Definitions

"Affiliate" shall have the meaning set forth in Section 1.1 of the Tariff.

"Applicable Law" shall mean all duly promulgated applicable federal, state and local laws, regulations, rules, ordinances, codes, decrees, judgments, directives, or judicial or administrative orders, permits and other duly authorized actions of any Governmental Authority having jurisdiction over a Party or the Parties, as applicable, their respective facilities and/or the respective services they provide.

"Attachment U-1" shall mean the Attachment to the Tariff known as the "Cost Allocation Procedures for Load Interconnections" or "Cost Allocation Procedures" which provides the interconnection request procedures and cost allocation methodology and standards applicable to this Interconnection Agreement.

"Balancing Area" shall mean an electric power system or combination of electric power systems bounded by interconnection metering and telemetering to which a common generation control scheme is applied in order to: (a) match the power output of generation resources within the electric power system(s) and energy delivered from or to entities outside the electric power system(s), with the load within the electric power system(s); (b) maintain scheduled interchange with other Balancing Areas, within the limits of Good Utility Practice; and (c) maintain the frequency of the electric power system(s) within reasonable limits in accordance with Good Utility Practice and the criteria of the NERC and the MRO.

"Balancing Area Operator" shall mean the entity with responsibility for operating and controlling generation and loads affecting Transmission Provider's transmission system. The Balancing Area Operator for the NSP System is the Midwest ISO, or its successor.

"Current Transformer" or "CT" shall mean a current transformer intended for metering, protective, or control purposes and designed to have its primary winding connected in series with a circuit carrying the current to be measured or controlled. A current transformer normally reduces current magnitudes to levels which can be handled by control, protection, and metering equipment.

"Effective Date" shall have the meaning set forth in Section 3.01.

"Emergency" shall mean a condition or situation that in the reasonable good faith determination of the affected Party based on Good Utility Practice contributes to an existing or imminent physical threat of danger to life or a significant threat to health, property or the environment.

"FERC" or "Commission" shall mean the Federal Energy Regulatory Commission, or its successor.

"Financing Party" shall have the meaning set forth in Section 15.01(c).

"Force Majeure" shall have the meaning set forth in Section 10.1 of the Tariff.

"Forced Outage" shall mean in the case of Interconnection Customer's distribution system, taking the distribution system, in whole or in part, out of service by reason of an Emergency or Network Security condition, unanticipated failure or other cause beyond the reasonable control of Interconnection Customer, when such removal from service was not scheduled in accordance with Section 5.02; and, in the case of Transmission Provider taking its transmission system, in whole or in part, out of service by reason of an Emergency or Network Security Condition, unanticipated failure, or other cause beyond the reasonable control of NSP when such removal from service was not scheduled in accordance with Section 5.02.

"Good Utility Practice" shall have the meaning set forth in Article 1 of the Tariff.

"Governmental Authority" shall mean any federal, state, local or other governmental regulatory or administrative agency, court, commission, department, board, or other governmental subdivision, legislature, rulemaking board, tribunal, or other governmental authority having jurisdiction over the Parties, their respective facilities, or the respective services that they provide, and exercising or entitled to exercise any administrative, executive, police, or taxing authority or power; provided, however, that such term does not include Interconnection Customer, Transmission Provider or any Affiliate thereof.

"Indemnified Party" shall have the meaning set forth in Section 14.02.

"Indemnifying Party" shall have the meaning set forth in Section 14.02.

"Initial Period" shall have the meaning set forth in Section 3.01.

"Interconnection Customer Interconnection Facilities" shall mean the equipment owned by Interconnection Customer for purposes of interconnecting to the Transmission Provider Interconnection Facilities, including but not limited to the substation, circuits, circuit breakers, bus work, land easements, relays, communications circuits, and associated equipment and any replacement or additional equipment that Interconnection Customer may install due to equipment failure or to meet changed industry standards and all related instrument transformers, substation and physical structures, all transmission facilities required to access the Point of Interconnection, and Interconnection Customer's metering, relays, electric energy collection network, and generation control equipment. The Interconnection Customer Interconnection Facilities are identified and described in Appendix A.

"Interconnection Facilities" shall mean the Interconnection Customer Interconnection Facilities and Transmission Provider Interconnection Facilities, collectively, as described in Appendix A.

"Interconnection Guidelines" shall mean *Xcel Energy's Interconnection Guidelines For Transmission Interconnected Customer Loads*, as they may be revised from time to time by Transmission Provider and posted on Transmission Provider's website (www.xcelenergy.com), the provisions of which shall apply to the Parties as set forth in this Interconnection Agreement.

"Interconnection Service" shall mean the service Transmission Provider will provide to Interconnection Customer to interconnect the Interconnection Customer Interconnection Facilities to the Transmission Provider's electric system (such facilities being described more fully in Appendix A), and the ongoing operations and maintenance of such facilities.

"Local Balancing Area Operator" or "LBA" shall mean the entity with responsibility for operating and controlling local generation and loads affecting Transmission Provider's transmission system, subject to the authority of the Balancing Area Operator. The Local Balancing Area Operator is the NSP Control Center or its successor.

"Meter Data Management Agent" or "MDMA" shall mean the entity designated by the Interconnection Customer through the execution of any necessary agreements to do so that provides meter data to the Transmission Provider and/or to MISO (as "Transmission Provider" as that term is defined in the MISO Tariff), whichever is applicable.

"Metering Device(s)" shall mean all meters, current and potential transformers, RTU, and data processing equipment used to measure, record, or transmit data relating to the electric power and energy output from, or input to, the Interconnection Customer, as identified in Appendix A. The Metering Point shall be separately identified from the Point of Interconnection.

"MISO" or "Midwest ISO" shall mean the Midwest Independent Transmission System Operator, Inc. or its successor organization.

"MISO Tariff" shall mean MISO's Open Access Transmission, Energy and Operating Reserve Markets Tariff in effect from time to time, as accepted for filing by FERC.

"MRO" shall mean the Midwest Reliability Organization, Inc., or its successor organization.

"NERC" shall mean the North American Electric Reliability Corporation, or its successor organization.

"Network Security" shall mean the ability of the NSP System to withstand sudden disturbances such as unforeseen conditions, electric short circuits or unanticipated loss of system elements.

"Network Upgrade" shall mean the additions, modifications, and upgrades to the NSP System at or beyond the Point of Interconnection.

"NSP Control Center" or "NSPCC" shall mean the NSP Transmission Control Center(s), as identified in Appendix B, responsible for operation of the NSP System, including the Transmission Provider Interconnection Facilities.

"Other Party Group" shall have the meaning set forth in Section 13.01(e).

"Planned Outage" shall mean action by (a) Interconnection Customer to take its equipment, facilities or systems out of service, partially or completely, to perform work on specific components that is scheduled in advance and has a predetermined start date and duration pursuant to the procedures set forth in Section 5.02; or (b) Transmission Provider to take its equipment, facilities and systems out of service, partially or completely, to perform work on specific components that is scheduled in advance and has a predetermined start date and duration pursuant to the procedures set forth in Section 5.02.

"Point of Interconnection" shall mean the physical point or points at which the Interconnection Customer Interconnection Facilities interconnect with the Transmission Provider Interconnection Facilities, as depicted in Appendix A.

"Reasonable Efforts" shall mean, with respect to an action required to be attempted or taken by a Party under the Interconnection Agreement, efforts that are timely and consistent with Good Utility Practice and are otherwise substantially equivalent to those a Party would use to protect its own interests.

"Reliability Standards" shall mean mandatory reliability standards adopted by NERC or MRO and approved by FERC, as amended from time to time, applicable to the facilities owned, and/or operated by Interconnection Customer and Transmission Provider, respectively.

"Remote Terminal Unit" or "RTU" shall mean a device installed at a substation or generation facility, and at the NSPCC, and is used to provide communication for remote control and indication of substation or generation facility equipment from the NSPCC.

"SCADA" shall have the meaning set forth in Section 4.09.

"State Regulatory Commission" shall mean the state regulatory agency with jurisdiction over (a) the retail electric rates and tariffs of NSPM or NSPW where the Point of Interconnection is located, and (b) determination of need or siting for new transmission facilities.

"System Protection Facilities" shall mean the equipment required to protect (a) the Transmission Provider's electric system, the systems of others directly or indirectly interconnected with the Transmission Provider's electric system, and the Transmission Provider's customers from faults occurring on the Interconnection Customer's side of the Point of Interconnection; and (b) Interconnection Customer from faults occurring on the Transmission Provider's electric system or on the systems of others to which the Transmission Provider's electric system is directly or indirectly interconnected.

"Tariff" or "OATT" shall mean the Xcel Energy Operating Companies Open Access Transmission Tariff on file with FERC, as amended from time to time.

"Term" shall mean the period of time during which this Interconnection Agreement shall remain in force and effect.

"TOA" or "Transmission Owners Agreement" shall mean the Agreement of Transmission Facilities Owner to Organize the Midwest Independent Transmission System Operator, Inc. accepted by FERC Order dated September 16, 1998, as amended from time to time and accepted for filing by FERC.

"Transmission Provider Interconnection Facilities" shall mean those facilities owned by the Transmission Provider necessary to establish a physical interconnection between Transmission Provider's existing electric system and the Interconnection Customer Interconnection Facilities at the Point of Interconnection, including but not limited to switches, circuits, circuit breakers, bus work, land easements, relays, communications circuits, and associated equipment, and any replacement or additional equipment that Transmission Provider may install due to equipment failure or to meet changed industry standards. The Transmission Provider Interconnection Facilities are identified and described in Appendix A. The Transmission Provider Interconnection Facilities shall not include Network Upgrades.

"Voltage Transformer" or "VT" shall mean a transformer intended for metering, protective, or control purposes and designed to have its primary winding connected either between the primary conductors to be measured or between a conductor and ground. A voltage transformer normally reduces voltage magnitudes to levels which can be handled by control, protection, and metering equipment. The historic term for a VT is potential transformer.

ARTICLE II
SCOPE

Section 2.01 Scope of Interconnection Agreement

(a) General. Transmission Provider shall provide Interconnection Service to Interconnection Customer as provided herein. This Agreement supersedes any prior interconnection agreement(s) between the Parties through which the Interconnection Customer's Interconnection Facilities were interconnected to Transmission Provider's electrical system. However, unless listed, any other agreements or schedules under which services are or may be provided shall remain in force. Specifically, this Interconnection Agreement supersedes the following agreement(s) as of the Effective Date: pro forma Transmission to Load Interconnection Agreement, service agreement 583, version 0.0.0. effective January 1, 2015.

(b) Limited Scope of Interconnection Agreement. This Interconnection Agreement sets forth the terms and conditions of Interconnection Service provided by Transmission Provider to Interconnection Customer. Although the Transmission Provider intends this Interconnection Agreement to be a service agreement under the Tariff, the establishment of Interconnection Service under this Interconnection Agreement does not in itself entitle Interconnection Customer to receive any services under the Tariff other than the Interconnection Service, as provided for herein. Any other services that Interconnection Customer may require, such as transmission service, must be separately arranged under the Tariff or MISO Tariff in accordance with the terms and conditions of such tariff, and paid for by Interconnection Customer or other user of such services.

(c) Other Arrangements. Interconnection Customer is responsible for making arrangements for the power supply of its load requirements and delivery of

capacity and energy to its system. The establishment of an interconnection under this Interconnection Agreement does not in itself entitle Interconnection Customer to obtain any services from the Transmission Provider that may be subject to the jurisdiction of FERC, or the State Regulatory Commission; Interconnection Customer must arrange for any such services in accordance with the applicable provider's tariff or service requirements.

Section 2.02 Facilities Served. The scope of the Interconnection Service provided hereunder is based on Interconnection Customer's description of its facilities (including the Interconnection Customer Interconnection Facilities), and Transmission Provider's description of its facilities (including the Transmission Provider Interconnection Facilities), as set forth in Appendix A.

ARTICLE III
TERMS AND TERMINATION

Section 3.01 Term. This Interconnection Agreement shall become effective on the first day of the first month after being executed by the Parties, unless the Parties shall provide otherwise, or if filed unexecuted, upon the date specified by FERC ("Effective Date"). Unless terminated earlier in accordance with Section 3.02 below, this Interconnection Agreement shall remain in effect for an initial period of ten (10) years from the Effective Date ("Initial Period"), and from year to year thereafter, but shall be subject to termination by either Party at the end of the Initial Period or on any anniversary date thereof by such Party giving written notice of its intention to terminate not less than twelve (12) months prior to the end of the Initial Period and/or anniversary date.

In the event either Party provides notice of termination of this Interconnection Agreement under this Section 3.01, and Interconnection Customer still requires interconnection service to serve loads on its distribution system, the Parties shall use commercially Reasonable Efforts to negotiate a replacement interconnection agreement. If Interconnection Customer no longer requires interconnection service, upon termination of this Interconnection Agreement, Transmission Provider may, at its sole discretion and at Interconnection Customer's expense, permanently disconnect or remove the Transmission Provider Interconnection Facilities, provided such expense is just and reasonable and not unduly discriminatory.

Section 3.02 Early Termination. Notwithstanding the term specified in Section 3.01, this Interconnection Agreement may be terminated early in the following circumstances: (a) by mutual agreement among the Parties; or (b) by either Party in the event of any material breach of this Interconnection Agreement by the other Party, provided, such termination shall be subject to FERC approval as set forth in Section 15.03 of this Interconnection Agreement.

The Parties shall use commercially Reasonable Efforts to mitigate the costs, damages and charges arising out of an early termination under this Section 3.02. In the event of a Dispute regarding the early termination fee, either Party may request dispute resolution pursuant to the procedures in Article XVI.

Section 3.03 Survival. Certain provisions of this Interconnection Agreement shall continue in effect after termination of this Interconnection Agreement to give full effect to its terms. Such provisions include, but are not necessarily limited to, those relating to early

termination, Interconnection Customer's payment for installation, operation, and maintenance of the Interconnection Customer's Interconnection Facilities, and, as applicable, to provide for disconnection of the Interconnection Customer's Interconnection Facilities from Transmission Provider's electric system, final billings and adjustments related to the period prior to termination, a Party's right to terminate, indemnification, and payment of any money due and owing to either Party pursuant to this Interconnection Agreement.

ARTICLE IV
OWNERSHIP, CONSTRUCTION, OPERATION AND MAINTENANCE

Section 4.01 Summary Description. Appendix A, which is attached hereto and made a part hereof, provides a description of Interconnection Customer's electrical facilities and distribution system, including the Interconnection Customer Interconnection Facilities, Transmission Provider's electrical facilities and transmission system, including the Transmission Provider Interconnection Facilities, and the Point of Interconnection.

Section 4.02 Interconnection Customer Interconnection Facilities and System Protection Facilities. Interconnection Customer shall at Interconnection Customer's sole expense design, construct, operate, maintain and own in accordance with applicable laws, rules and regulations, the Tariff, and Good Utility Practice, the Interconnection Customer Interconnection Facilities as described in Appendix A. Further Interconnection Customer shall operate the Interconnection Customer Interconnection Facilities in a manner that protects the Transmission Provider's electric system and the Transmission Provider Interconnection Facilities from transients, faults, and other operating contingencies occurring at or caused by the Interconnection Customer.

Design and specification of System Protection Facilities including, protective relaying, alarming, fault recording, control, dVAR controller, metering, and related systems for substations, high voltage switch gear and transformers shall be subject to the Transmission Provider's review and approval, which approval shall not be unreasonably withheld or delayed. All System Protection Facilities must be in compliance with applicable laws, rules and regulations, Good Utility Practice and the requirements set forth in this Interconnection Agreement.

Interconnection Customer may be required to install, operate and maintain facilities and equipment required for Transmission Provider to comply with applicable frequency-based, voltage-based and manual load shedding obligations established by Reliability Standards or the Balancing Area Operator. Transmission Provider shall require Interconnection Customer to install such facilities or equipment only to the extent it imposes comparable obligations on Transmission Provider's native load customers.

Section 4.03 Transmission Provider Interconnection Facilities. Transmission Provider shall design, construct, operate, maintain, and own in accordance with applicable laws, rules and regulations, the Tariff, Good Utility Practice and the Interconnection Guidelines, the Transmission Provider Interconnection Facilities shown on Appendix A, and shall operate such facilities in a manner that protects the Interconnection Customer's electric system, including the Interconnection Customer Interconnection Facilities, from transients, faults, and other operating contingencies. The costs associated with Transmission Provider's Interconnection Facilities required to provide

service to Interconnection Customer may be allocated to Interconnection Customer in accordance with Attachment U-1 to the Tariff.

Transmission Provider represents that to the best of its knowledge, the Interconnection Facilities, as of the Effective Date and described in Appendix A, are sufficient to permit interconnection of the Interconnection Customer Interconnection Facilities with the Transmission Provider Interconnection Facilities without additional equipment and in accordance with applicable Tariff interconnection requirements. Further Transmission Provider will support the design and adequacy of the Interconnection Facilities as described in Appendix A before any regulatory body having approval authority over the Interconnection Facilities.

Section 4.04 Network Upgrades. Transmission Provider shall plan, design, procure, construct, own, operate and maintain any Network Upgrades determined to be needed by Transmission Provider in accordance with Good Utility Practice, the Tariff and this Interconnection Agreement. The costs associated with Network Upgrades required to provide service to Interconnection Customer may be allocated to Interconnection Customer in accordance with Attachment U-1 to the Tariff.

Section 4.05 Modifications to Interconnection Facilities.

(a) Either Party may undertake modifications to its respective Interconnection Facilities which shall be designed, constructed and operated in accordance with this Interconnection Agreement and Good Utility Practice; provided however, if (1) Interconnection Customer proposes (i) to make any change or modification to the configuration or operation of the Interconnection Customer Interconnection Facilities which may impact Transmission Provider's Transmission System, including the Transmission Provider Interconnection Facilities, (ii) to add a new Point of Interconnection, or (iii) to eliminate a Point of Interconnection (except when this Interconnection Agreement is terminated); or (2) Transmission Provider proposes to make any change or modification to the configuration or operation of the Transmission Provider Interconnection Facilities which may impact the Interconnection Customer Interconnection Facilities, (i) the Party proposing the change shall provide sufficient notice and information regarding such modification so that the other Party may evaluate the potential impact of such modification prior to the commencement of any work, and (ii) the Parties shall negotiate, in good faith, an amendment to this Interconnection Agreement as may be necessary to address the proposed change.

(1) Information provided under Section 4.05(a) may be designated by a Party to be Confidential Information hereunder, including, but not be limited to, information concerning the timing of such modification and how such modifications are expected to impact the other Party's system. Unless a shorter period of time is appropriate for a Party to respond to an Emergency, or comply with Reliability Standards or Applicable Law, the Party desiring to perform such work shall provide the relevant drawings, plans and specifications to the other Party at least ninety (90) days in advance of the commencement of the work or such shorter period upon which the Parties may agree, which agreement shall not unreasonably be withheld, conditioned or delayed.

(2) In the event the Parties are unable to agree to appropriate amendments or modifications to this Interconnection Agreement pursuant to Section 4.05(a), the Transmission Provider will unilaterally file, on a timely basis, with FERC an amendment to this Interconnection Agreement.

(3) The Parties' agreement to add a new Point of Interconnection shall be documented pursuant to Appendix C and Appendix E. The Parties' agreement to modify or remove a Point of Interconnection shall be documented pursuant to Appendix D and Appendix E; provided however, such documentation for removal of a Point of Interconnection is not necessary when this Interconnection Agreement is terminated pursuant to Section 3.02 or Article XV.

(b) To the extent Interconnection Customer is the Party modifying its interconnection facilities, Interconnection Customer shall be responsible for the costs of any additions, modifications or replacements that may be necessary to maintain or upgrade the Interconnection Customer Interconnection Facilities consistent with applicable laws, rules and regulations, the Tariff, Good Utility Practice, and the Interconnection Guidelines. Interconnection Customer shall own any modifications to the Interconnection Customer Interconnection Facilities.

(c) In the event the Transmission Provider designs and constructs new or additional Transmission Provider Interconnection Facilities or upgrades, improvements or other modifications to existing Transmission Provider Interconnection Facilities that result in those facilities qualifying as Network Upgrades (such facilities shall be treated as Network Upgrades for purposes of cost assignment), then Interconnection Customer shall not be responsible for the cost of such facilities or modifications.

Section 4.06 Ownership of Transmission Provider Interconnection Facilities and Network Upgrades. As a general rule, Transmission Provider shall own, design, construct, operate and maintain the Transmission Provider Interconnection Facilities and Network Upgrades, including facilities that are the subject of Sections 4.03 through 4.07. The Parties acknowledge and agree that there may be circumstances where alternative ownership arrangements for such facilities (*e.g.*, ownership by the Interconnection Customer) may be warranted if mutually agreed and in accordance with Good Utility Practice, just and reasonable, and not unduly discriminatory or preferential. To determine the appropriateness of using an alternative ownership arrangement, the Parties may consider factors such as: (i) state and federal legal requirements, including applicable rights of first refusal; (ii) achieving the lowest reasonable cost; (iii) the effect of tax liabilities and payment of such liabilities; (iv) the relationship of the Transmission Provider Interconnection Facilities and/or Network Upgrades to other facilities owned by the Transmission Provider or Interconnection Customer; (v) the ability of the Transmission Provider or Interconnection Customer to own, operate and maintain the Transmission Provider Interconnection Facilities and/or Network Upgrades in accordance with Applicable Law and Reliability Standards; (vi) the purpose of the Transmission Provider Interconnection Facilities and/or Network Upgrades with consideration to who will benefit from such facilities; and (vii) whether the Party possesses adequate insurance to hold harmless the other Party and any third party from any claim, penalty, damage, liability or injury associated with such facilities. Should the Parties disagree on entering into an alternative ownership arrangement, and/or the

terms and conditions of the alternative ownership arrangement, either Party shall have the right to unilaterally make applications to FERC under the Federal Power Act to seek resolution of such disagreement.

Alternative ownership and other arrangements may be provided for in the Interconnection Agreement or Appendix C or Appendix D supplemental agreement. Nothing herein shall waive Parties' rights or entitlements under Applicable Law.

Section 4.07 Construction.The Parties agree construction-related activities shall not commence until (1) the conditions set forth in Section 4.05 and/or Attachment U-1 have been satisfied, (2) all necessary federal, state, local and regulatory permits, permissions or approvals have been obtained, and (3) the Parties have agreed to a final construction schedule.

Section 4.08 Reliability Standards. Interconnection Customer shall be responsible for compliance with all Reliability Standards applicable to Interconnection Customer's electrical system; and Transmission Provider shall be responsible for compliance with all Reliability Standards applicable to its transmission system. Each Party shall be responsible for the costs of compliance with such Reliability Standards for their respective facilities and systems, including (a) costs associated with modifying their respective facilities or systems to comply with changes in such Reliability Standards; and (b) any financial penalties for non-compliance. The Parties agree to share data or documentation as may be required to demonstrate compliance with Reliability Standards where an individual Party has possession of data or documentation necessary for the other Party to demonstrate compliance.

Section 4.09 Interconnection Guidelines. The Interconnection Guidelines provide additional and more detailed standards for designing, testing, studying, constructing, operating, maintaining and interconnecting at the Point of Interconnection. Transmission Provider shall develop or promulgate the Interconnection Guidelines, including any updates, changes or modifications thereto, in accordance with Good Utility Practice. The Interconnection Guidelines include, among other things, power factor requirements, supervisory control and data acquisition ("SCADA") equipment requirements, and metering requirements.

Interconnection Customer will comply with the Interconnection Guidelines, as appropriate, for (i) any new point(s) of interconnection requested by Interconnection Customer on or after the Effective Date; (ii) any existing point(s) of interconnection materially modified after the Effective Date; and (iii) if the MISO market registration is changed; provided, however, Interconnection Customer is not required to comply with the Interconnection Guidelines for any Point(s) of Interconnection established pursuant to a prior interconnection agreement among the Parties, where no material modification was needed to the Point of Interconnection as a result of entering into this Agreement. After consultation with Interconnection Customer pursuant to Section 1.03(d), Transmission Provider will determine if there has been a material modification and such determination shall be done so in accordance with Good Utility Practice, and on a comparable, non-discriminatory basis Except when Interconnection Customer is excused from complying with the Interconnection Guidelines, failure by Transmission Provider or Interconnection Customer to fulfill its obligations under the Interconnection Guidelines may be a material breach of this Interconnection Agreement.

Should a conflict develop between the Interconnection Guidelines and FERC rules, the Tariff or applicable Reliability Standards, the Parties agree to abide by the FERC rules, Tariff or Reliability Standards until Transmission Provider modifies the Interconnection Guidelines to remove such conflict. The Parties shall use the Dispute Resolution procedures set forth in Article XVI to resolve any disagreements regarding the interpretation, application or implementation of the Interconnection Guidelines.

Section 4.10 Power Factor. Unless prevented by circumstances beyond Interconnection Customer's control, including Forced Outages, Interconnection Customer shall have sufficient power factor control equipment (such as capacitors) installed to maintain at minimum a 95-percent lagging or leading power factor at the Point of Interconnection for those loads greater than 1 MW. Interconnection Customer shall maintain the aforesaid requirement during peak load periods and avoid leading power factor during light load conditions. Over time, it is the intention of the Parties that Interconnection Customer and Transmission Provider's load serving function will improve their respective power factor to a 98-percent lagging to leading power factor for those aggregated loads greater than 5 MWs. The power factor will be determined based on the MWh and MVARh flows during the monthly peak hour interval measured at each point of metering as follows: Power Factor = MWh/sqrt(MWh^2 + MVARh^2). With mutual agreement, reactive power support may be considered at an adjacent point of interconnection provided the substation is in electrically close proximity, in which case, the MWh and MVARh flows for each transformer may be combined for the purposes of compliance with this Section 4.10.

In the event Interconnection Customer has an aggregated load of over 1 MW but does not have sufficient power factor control equipment (such as capacitors) installed, to maintain at a minimum a 95-percent lagging or leading power factor at the Point of Interconnection, Interconnection Customer within thirty (30) days after written notice from Transmission Provider of such deficiency shall correct the deficiency or provide Transmission Provider with a written commitment to correct the deficiency. In the event Interconnection Customer makes a written commitment to add power factor control equipment (such as capacitors), Interconnection Customer shall exert commercially reasonable efforts to expeditiously bring such equipment into service and to complete installation within one (1) year from the initial notice or within such other time established by mutual agreement between the Parties. If the additional capacitors are not installed within the allowed time and Transmission Provider installs or has installed power factor control equipment on the Transmission System, Transmission Provider may bill Interconnection Customer a facilities fee based upon Transmission Provider's capital installation cost of an equivalent amount of power factor control equipment.

Section 4.11 Meter Data Management. Interconnection Customer shall have the right to select any entity, including itself, to be the MDMA that provides meter data to MISO; provided, however, that such entity has the necessary and appropriate qualifications to be an MDMA and provide meter data to MISO. Should the Parties mutually agree that Transmission Provider shall serve as the MDMA for Interconnection Customer, the rate for MDMA services shall be as set forth in the Tariff.

Section 4.12 Access. Appropriate representatives of each Party shall at all reasonable times; including weekends and nights, and with three (3) business days prior notice, have access to the other Party's facilities, to take readings and to perform all inspections, maintenance, service, and operational reviews as may be appropriate or necessary to

facilitate the performance of this Interconnection Agreement. While on the other Party's premises, each Party's representatives shall announce their presence and observe such safety precautions as may be required and shall conduct themselves in a manner that will not interfere with the other Party's operations.

Section 4.13 Right of Installation. Each Party will make available suitable space for installation by the other Party of necessary equipment, apparatus and devices required for the performance of this Interconnection Agreement.

Section 4.14 Right of Removal. Any and all equipment, apparatus and devices caused to be placed or installed by one Party on, or in, the premises of the other Party shall be and remain the property of the Party owning such equipment, apparatus and devices regardless of the mode or manner of annexation or attachment to the premises. All foundations for all equipment shall be removed completely from the premises or to a lesser degree if an agreement for the lesser degree is reached between the Parties at the time. Notwithstanding the forgoing, in lieu of removal, the Parties reserve the right to sell any and all equipment, apparatus and devices that are attached to the premises. Once the aforesaid equipment is removed, the Parties will update Appendix A to reflect the removal.

Section 4.15 Transfer of Control or Sale of Facilities. In any sale or transfer of control of the Interconnection Customer's Interconnection Facilities, Interconnection Customer shall as a condition of such sale or transfer require the acquiring party or transferee with respect to the transferred facilities either to assume the obligations of Interconnection Customer with respect to this Interconnection Agreement or to enter into an agreement with Transmission Provider imposing on the acquiring party or transferee the same obligations applicable to Interconnection Customer pursuant to this Section 4.15.

ARTICLE V
OUTAGES AND COORDINATION

Section 5.01 Disconnection.

(a) Except when there is an Emergency, Forced Outage, Force Majeure and/or to comply with Applicable Law, including Reliability Standards, the Parties shall reasonably consult each other prior to disconnecting facilities.

(b) If at any time, the Transmission Provider observes any protective equipment which appears to have been changed other than pursuant to Section 4.05 and/or Attachment U-1, or failed, Transmission Provider shall have the right, if Transmission Provider determines that such change may have a material adverse impact on the safety or reliability of Transmission Provider's electric system consistent with Good Utility Practice, to disconnect Interconnection Customer's electric system from Transmission Provider's electric system, provided Transmission Provider first provides commercially reasonable notice to Interconnection Customer. Transmission Provider may require, at Interconnection Customer's expense (subject to Attachment U-1), a new calibration and activation test of Interconnection Customer's protective equipment after such equipment has been corrected or repaired.

Section 5.02 Outages. In accordance with Good Utility Practice, each Party may, in close cooperation with the other, remove from service its system elements that may impact the other Party's system as necessary to perform maintenance or testing or to replace installed equipment. Absent the existence of an Emergency, the Party scheduling a removal of a system element from service will use good-faith efforts to schedule such removal on a date mutually acceptable to both Parties, in accordance with Good Utility Practice.

In the event of a Forced Outage of a system element of the Interconnection Customer's electric system adversely affecting the Transmission Provider's facilities or electric system, Interconnection Customer will use Good Utility Practice to promptly restore that system element to service. In the event of a Forced Outage of a system element of the Transmission Provider's electric system adversely affecting the Interconnection Customer's facilities or electric system, the Transmission Provider will use Good Utility Practice to promptly restore that system element to service.

In the event of a Planned Outage of a system element of Interconnection Customer's electric system adversely affecting Transmission Provider's facilities or electric system, Interconnection Customer will act in accordance with Good Utility Practice to promptly restore that system element to service in accordance with its schedule for the work that necessitated the planned outage. In the event of a Planned Outage of a system element of the Transmission Provider's electric system adversely affecting Interconnection Customer's facilities or electric system, Transmission Provider will act in accordance with Good Utility Practice to promptly restore that system element to service in accordance with its schedule for the work that necessitated the planned outage.

Section 5.03 Outage Reporting. The Parties shall comply with all current Transmission Provider, and MISO reporting requirements, as they may be revised from time to time, and as they apply to the Interconnection Customer or Transmission Provider. When a Forced Outage occurs that affects the Interconnection Customer Interconnection Facilities or impacts Interconnection Customer's electrical system such that there is an adverse impact to the Point of Interconnection, Interconnection Customer shall notify the NSP Control Center of the existence, nature, and expected duration of the Forced Outage as soon as practical, but in no event later than one (1) hour after the Forced Outage occurs. Interconnection Customer shall immediately inform the NSP Control Center of changes in the expected duration of the Forced Outage unless relieved of this obligation by the NSP Control Center for the duration of each Forced Outage. When a Forced Outage occurs that affects the Transmission Provider Interconnection Facilities or impacts Transmission Provider's transmission system such that there is an adverse impact to the Point of Interconnection, Transmission Provider shall notify Interconnection Customer of the existence, nature, and expected duration of the Forced Outage as soon as practical.

Section 5.04 Switching and Tagging Rules. The Parties shall abide by their respective switching and tagging rules for obtaining clearances for work or for switching operations on equipment. Transmission Provider shall notify Interconnection Customer of Transmission Provider's switching and tagging rules, and provide periodic updates of such rules as they may change from time to time. Interconnection Customer shall establish switching and tagging rules for Interconnection Customer Interconnection Facilities, and shall provide such rules to the Transmission Provider.

Section 5.05 Coordination. If a Party's interconnection facilities are subject to MISO's functional control, the Parties will coordinate with the applicable functional directives from MISO. In all other circumstances:

(a) Electrical system operation shall be coordinated between Interconnection Customer and Transmission Provider, including the coordination of equipment outages, voltage levels, real and reactive power flow monitoring, and switching operations, which affect the Balancing Area or LBA, as required by the Tariff and this Interconnection Agreement.

(b) If either Interconnection Customer or Transmission Provider operations are causing a condition on the interconnected electrical network where line loadings, equipment loadings, voltage levels or reactive flow significantly deviate from normal operating limits or can be expected to exceed emergency limits following a contingency, and reliability of the bulk power supply is threatened, the LBA, or Transmission Provider shall take immediate steps and make Reasonable Efforts to relieve, correct or control the condition. These steps include notifying other affected electric utility systems and MISO, as applicable, adjusting generation, changing schedules between Balancing Areas, initiating load relief measures, and taking such other reasonable action as may be required. Electrical equipment is to be operated within its normal rating established by the owning Party except for temporary conditions after a contingency has occurred.

(c) If either Interconnection Customer or Transmission Provider changes the normal operation of its system at a Point of Interconnection, the Parties shall consider any resulting benefits or adverse impacts to the reliability or transfer capability of the interconnected network for purposes of determining any applicable adjustments to the Parties' respective system usage rights and responsibilities.

(d) The Parties shall cooperate to supply, as applicable, MISO required information, including but not limited to, calculation of available flowgate or transmission capacity determination and for security constrained economic dispatching purposes.

(e) Each Party shall notify the other as soon as practicable whenever:

(1) Problems with a Point of Interconnection are detected that could result in mis-operation of interconnection protection or other interconnection equipment;

(2) The interconnection is opened by protective relay action;

(3) Interconnection equipment problems occur and result in an outage to a portion of Transmission Provider's electric system;

(4) A Party intends to initiate switching to close the interconnection; or,

(5) A Party intends to initiate switching to open the interconnection.

Section 5.06 Emergency. In the event of an Emergency, the Party becoming aware of the Emergency may, in accordance with Good Utility Practice and using its reasonable

judgment, take such action as is reasonable and necessary to prevent, avoid, or mitigate injury, danger, and loss.

(a) In the event Interconnection Customer has identified an Emergency involving the Transmission Provider Interconnection Facilities, Interconnection Customer shall obtain the consent of Transmission Provider personnel prior to manually performing any switching operations unless immediate action is essential to protecting the safety of individuals or against extreme damage to property.

(b) Transmission Provider may, consistent with Good Utility Practice, take whatever actions or inactions the Transmission Provider deems necessary during an Emergency in order to: (1) preserve public health and safety; (2) preserve the reliability of the Transmission Provider's electric system, including the Transmission Provider Interconnection Facilities; (3) limit or prevent damage; and (4) expedite restoration of service. Transmission Provider shall use Reasonable Efforts to minimize the effect of such actions or inactions on the Interconnection Customer Interconnection Facilities.

(c) Interconnection Customer may, consistent with Good Utility Practice, take whatever actions or inactions with regard to the Interconnection Customer Interconnection Facilities Interconnection Customer deems necessary during an Emergency in order to: (1) preserve public health and safety; (2) preserve the reliability of the Interconnection Customer Interconnection Facilities; (3) limit or prevent damage; and (4) expedite restoration of service. Interconnection Customer shall use Reasonable Efforts to minimize the effect of such actions or inactions on Transmission Provider's electric system.

(d) Transmission Provider shall provide Interconnection Customer with prompt oral or electronic notification under the circumstances of an Emergency that may reasonably be expected to affect Interconnection Customer's operations, to the extent the Transmission Provider is aware of the Emergency. Interconnection Customer shall provide the Transmission Provider with prompt oral or electronic notification under the circumstances of an Emergency which may reasonably be expected to affect the Transmission Provider's electric system, to the extent Interconnection Customer is aware of the Emergency. To the extent the Party becoming aware of an Emergency is aware of the facts of the Emergency, such oral or electronic notification shall describe the Emergency, the extent of the damage or deficiency, its anticipated duration, and the corrective action taken and/or to be taken.

(e) To the extent a system Emergency exists on Transmission Provider transmission system, and Transmission Provider, Balancing Area Operator, or Reliability Coordinator determines it is necessary for the Transmission Provider and Interconnection Customer to shed load, the Parties shall shed load in accordance with the Tariff.

ARTICLE VI
SAFETY

Section 6.01 Safety Standards. The Parties agree that all work performed under this Interconnection Agreement shall be performed in accordance with all applicable laws,

regulations, rules, standards, practices and procedures pertaining to the safety of persons or property. To the extent a Party performs work on the other Party's premises, the Party performing work shall also abide by the safety, or other access rules applicable to those premises.

Each Party shall be solely responsible for the safety and supervision of its own employees, agents, representatives, and contractors.

ARTICLE VII
ENVIRONMENTAL CONSIDERATIONS

Section 7.01 Environmental Considerations. Each Party will remain responsible for compliance with any and all environmental laws applicable to its own respective property, facilities, and operations. Each Party shall promptly notify the other Party upon discovering any release of any hazardous substance by it on the property or facilities of the other Party, or which may migrate to, or adversely impact the property, facilities or operations of, the other Party and shall promptly furnish to the other Party copies of any reports filed with any governmental agencies addressing such events.

The Party responsible for the release of any hazardous substance on the property or facilities of the other Party, or which may migrate to, or adversely impact the property, facilities or operations of, the other Party shall be responsible for the reasonable cost of performing any and all remediation or abatement activity and submitting all reports or filings required by environmental laws. Advance written notification (except in emergency situations, in which verbal, followed by written notification, shall be provided as soon as practicable) shall be provided by any Party performing any remediation or abatement activity on the property or facilities of the other Party, or which may adversely impact the property, facilities, or operations of, the other Party. Except in an Emergency, such remediation or abatement activity shall be performed only with the consent of the Party owning the affected property or facilities. The Parties agree to coordinate, to the extent necessary, the preparation of site plans, reports or filings required by law or regulation.

ARTICLE VIII
FORCE MAJEURE

Section 8.01 Effect of Declaring Force Majeure. Except for the obligation to make any payments under this Interconnection Agreement, neither Party shall be considered to be in default or breach of this Interconnection Agreement or liable in damages or otherwise responsible to the other Party for any delay in or failure to carry out any of its obligations under this Interconnection Agreement if, and only to the extent that, the Party is unable to perform or is prevented from performing by an event of Force Majeure. Notwithstanding the foregoing sentence, neither Party may claim Force Majeure for any delay or failure to perform or carry out any provision of this Interconnection Agreement to the extent that such Party has been negligent or engaged in intentional misconduct and such negligence or intentional misconduct substantially and directly caused that Party's delay or failure to perform or carry out its duties and obligations under this Interconnection Agreement.

Section 8.02 Procedures for Declaring Force Majeure. A Party claiming Force Majeure must:

(a) Give written notice to the other Party of the occurrence of a Force Majeure as soon as practicable;

(b) Use Reasonable Efforts to resume performance or the provision of service hereunder as soon as practicable;

(c) Take all commercially reasonable actions to correct or cure the Force Majeure;

(d) Exercise all Reasonable Efforts to mitigate or limit damages to the other Party; except that neither party shall be required to settle any strike, walkout, lockout or other labor dispute on terms which, in the sole judgment of the Party involved in the dispute, are contrary to its interest; and

(e) Provide written notice to the non-declaring Party, as soon as practicable, of the cessation of the adverse effect of the Force Majeure on its ability to perform its obligations under this Interconnection Agreement.

ARTICLE IX
BILLING AND PAYMENT

Section 9.01 Billing Procedure. Transmission Provider shall bill Interconnection Customer for the actual costs incurred under this Interconnection Agreement consistent with the procedures set forth in Article 7 of the Tariff. Payment of an invoice shall not relieve the paying Party from any responsibilities or obligations it has under this Interconnection Agreement, nor shall such payment constitute a waiver of any claims arising hereunder.

Section 9.02 Interest on Unpaid Balances. Interest on any unpaid amounts that are past due (including amounts placed in escrow) shall be calculated in accordance with Article 7 of the Tariff.

Section 9.03 Billing Disputes. If all or part of any bill is disputed by a Party, that Party shall promptly pay the amount that is not disputed, provide the other Party a reasonably detailed written explanation of the basis for the dispute, and request the commencement of dispute resolution pursuant to Article XVI of this Interconnection Agreement. When the amount in dispute is equal to or greater than one million dollars ($1,000,000), the disputed amount shall be paid into an independent escrow account pending resolution of the dispute, at which time the prevailing Party shall be entitled to receive the disputed amount, as finally determined to be payable, along with interest accrued at the Interest Rate through the date on which payment is made, within ten (10) business days of such resolution. If the amount in dispute is less than one million dollars ($1,000,000), the disputing Party may withhold the disputed amount or pay the disputed amount into an independent escrow account pending resolution of the dispute, at which time the prevailing Party shall be entitled to receive the disputed amount, as finally determined to be payable, along with interest accrued at the Interest Rate through the date on which payment is made, within ten (10) business days of such resolution. The Parties may elect, but are not required, to agree to Alternative Dispute Resolution, including arbitration. Neither Party shall be responsible for the other Party's cost of collecting amounts due under this Interconnection Agreement, including attorney's fees.

ARTICLE X
NOTICES

Section 10.01 Notices. Any notice, demand, request, or communication required or authorized by this Interconnection Agreement shall be hand delivered or mailed by certified mail, return receipt requested, with postage prepaid, to Parties as set forth in Appendix B. In addition to the obligations set forth in the preceding sentence, a Party providing notice, demand, request or communication pursuant to this Section may also provide a courtesy copy of such notice, demand, request, or communication via electronic mail, or email. Any Party may update that portion of Appendix B that pertains to such Party's address by giving written notice to the other Parties of such change at any time.

ARTICLE XI
REGULATION AND MODIFICATION OF RATES

Section 11.01 Regulation. This Interconnection Agreement is subject to the jurisdiction of the FERC.

Section 11.02 Modification. Transmission Provider reserves its rights under Section 205 of the Federal Power Act to unilaterally make applications to FERC for modification of the rates, terms, conditions, classification of service, rule, or regulation for any service the Transmission Provider provides under this Interconnection Agreement and the attachments hereto over which FERC has jurisdiction. Interconnection Customer reserves its rights under Section 206 of the Federal Power Act to unilaterally make application to FERC for modification of the rates, terms, conditions, classification of service, rule, or regulation for any service provided under this Interconnection Agreement and the attachments hereto over which FERC has jurisdiction.

ARTICLE XII
ASSIGNMENT

Section 12.01 Successors and Assigns. This Interconnection Agreement shall be binding upon the respective Parties, their successors and permitted assigns, on and after the Effective Date hereof.

Section 12.02 Assignment Restrictions. This Interconnection Agreement may be assigned by either Party only with the written consent of the other; provided, however, that either Party may assign this Interconnection Agreement without the consent of the other Party to any Affiliate of the assigning Party with an equal or greater credit rating and with the legal authority and operational ability to satisfy the obligations of the assigning Party under this Interconnection Agreement; and provided further that Interconnection Customer shall have the right to assign this Interconnection Agreement, without the consent of Transmission Provider, for collateral security purposes to aid in providing financing, provided that Interconnection Customer promptly notifies Transmission Provider of any such assignment. Any financing arrangement entered into by Interconnection Customer pursuant to this Article XII will provide that prior to or upon the exercise of the secured party's, trustee's or mortgagee's assignment rights pursuant to said arrangement, the secured creditor, the trustee or mortgagee will notify Transmission Provider of the date and particulars of any such exercise of assignment right(s). Any attempted assignment that violates this Article XII is void and ineffective. Any assignment under this Interconnection Agreement shall not relieve a Party of its obligations, nor shall a Party's obligations be enlarged, in whole or in part, by reason

thereof. Where requested, consent to assignment will not be unreasonably withheld, conditioned or delayed.

ARTICLE XIII
INSURANCE

Section 13.01 Applicability. If Interconnection Customer is a municipality, city, county, town, public authority or other political subdivision that qualifies for statutory limitations on liability under Applicable Law, Interconnection Customer shall procure and maintain, at its own expense, insurance coverages in accordance with the requirements set forth in Appendix F. In all other circumstances, Interconnection Customer shall comply with the requirements set forth in Section 13.02.

Section 13.02 Insurance. Each Party shall, at its own expense, maintain in force until this Interconnection Agreement is terminated and until released by the other Party, the following insurance coverages with insurers authorized to do business in the state where the Point of Interconnection is located:

(a) Employer's Liability and Workers' Compensation Insurance providing statutory benefits in accordance with the laws and regulations of the state in which the Point of Interconnection is located.

(b) Commercial General Liability Insurance including premises and operations, personal injury, broad form property damage, broad form blanket contractual liability coverage (including coverage for the contractual indemnification) products and completed operations coverage, coverage for explosion, collapse and underground hazards, independent contractors coverage, coverage for pollution to the extent normally available and punitive damages to the extent normally available and a cross liability endorsement, with minimum limits of one million dollars ($1,000,000) per occurrence/one million dollars ($1,000,000) aggregate combined single limit for personal injury, bodily injury, including death and property damage.

(c) Comprehensive Automobile Liability Insurance for coverage of owned and non-owned and hired vehicles, trailers or semi-trailers designed for travel on public roads, with a minimum, combined single limit of one million dollars ($1,000,000) per occurrence for bodily injury, including death, and property damage.

(d) Excess Public Liability Insurance over and above the Employers' Liability Commercial General Liability and Comprehensive Automobile Liability Insurance coverage, with a minimum combined single limit of ten million dollars ($10,000,000) per occurrence/ ten million dollars ($10,000,000) aggregate.

(e) The Commercial General Liability Insurance, Comprehensive Automobile Insurance and Excess Public Liability Insurance policies shall name the other Party, its parent, associated and Affiliate companies and their respective directors, officers, agents, servants and employees ("Other Party Group") as additional insured. All policies shall contain provisions whereby the insurers waive all rights of subrogation in accordance with the provisions of this Interconnection Agreement against the Other Party Group and provide thirty (30)

calendar days advance written notice to the Other Party Group prior to the anniversary date of cancellation or any material change in coverage or condition.

(f) The Commercial General Liability Insurance, Comprehensive Automobile Liability Insurance and Excess Public Liability Insurance policies shall contain provisions that specify that the policies shall apply to such extent without consideration for other policies separately carried. Each Party shall be responsible for its respective deductibles or retentions.

(g) The Commercial General Liability Insurance, Comprehensive Automobile Liability Insurance and Excess Public Liability Insurance policies, if written on a Claims First Made Basis, shall be maintained in full force and effect for two (2) years after termination of this Interconnection Agreement, which coverage may be in the form of tail coverage or extended reporting period coverage if agreed by the Parties.

(h) The requirements contained herein as to the types and limits of all insurance to be maintained by the Parties are not intended to and shall not in any manner, limit or qualify the liabilities and obligations assumed by the Parties under this Interconnection Agreement.

(i) Within ten (10) days following execution of this Interconnection Agreement, and as soon as practicable after the end of each fiscal year or at the renewal of the insurance policy and in any event within ninety (90) days thereafter, each Party shall provide certification of all insurance required in this Interconnection Agreement, executed by each insurer or by an authorized representative of each insurer.

(j) Notwithstanding the foregoing, each Party may self-insure to meet the minimum insurance requirements of subsections (a)-(h) of this Section 13.01 to the extent the Party maintains a self-insurance program; provided that, such Party's senior secured debt is rated at investment grade or better by Standard & Poor's and that its self-insurance program meets the minimum insurance requirements set forth in subsections (a)-(h) of this Section 13.01. For any period of time that a Party's senior secured debt is unrated by Standard and Poor's, such Party shall comply with the insurance requirements set forth in subsections (a)–(i) of this Section 13.01. In the event that a Party is permitted to self-insure pursuant to this Article XIII, it shall notify the other Party that it meets the requirements to self-insure and that its self-insurance program meets the minimum insurance requirements in a manner consistent with that specified in this Section 13.01(j).

(k) The Parties agree to report to each other in writing as soon as practicable all accidents or occurrences resulting in injuries to any person, including death, and any property damage arising out of this Interconnection Agreement.

(l) In the event Interconnection Customer is a municipality or other governmental entity, Interconnection Customer will be subject to the insurance coverage obligations set forth in Appendix F in lieu of the insurance obligations set forth in this Section 13.02.

ARTICLE XIV
CONSEQUENTIAL DAMAGES, INDEMNITY AND RISK OF LOSS

Section 14.01 Waiver of Consequential Damages. In no event shall one Party, its governing board members, officers, employees or agents be liable to the other Party under this Interconnection Agreement from any cause howsoever arising in contract, tort or otherwise for any indirect, incidental, special, punitive, exemplary, or consequential damages, including but not limited to, loss of use, loss of revenue, loss of profit, and/or cost of replacement power, interest charges, cost of capital, claims of its customers to which service is made; provided, however, that damages for which a Party may be liable to the other Party under another agreement will not be considered to be special, indirect, incidental, punitive, exemplary or consequential damages hereunder.

Section 14.02 Indemnity. Each Party shall at all times indemnify, defend and hold harmless the other Party, its shareholders, members, partners, Affiliates, employees, consultants, representatives, agents, successors and permitted assigns ("Indemnified Party") from any and all liability, damages, losses, claims, including claims and actions relating to injury to or death of any person or damage to property, demand, suits, recoveries, costs and expenses, court costs, attorney fees, and all other obligations by or to third parties, arising out of or resulting from the other Party's ("Indemnifying Party") negligence, or action or inactions of its obligations under this Interconnection Agreement, except in cases of negligence, gross negligence or intentional wrongdoing by the Indemnified Party. Nothing in this Section 14.02 shall relieve the Transmission Provider or Interconnection Customer of any liability to the other for any breach of this Interconnection Agreement.

(a) If an Indemnified Party is entitled to indemnification under this Section 14.02 as a result of a claim by a third party, and the Indemnifying Party fails, after notice and reasonable opportunity to proceed, to assume the defense of such claim, the Indemnified Party may at the expense of the Indemnifying Party contest, settle or consent to the entry of any judgment with respect to, or pay in full, such claim.

(b) If an Indemnifying Party is obligated to indemnify and hold any Indemnified Party harmless under this Section 14.02, the amount owing to the Indemnified Party shall be the amount of such Indemnified Party's loss net of any insurance or other recovery.

(c) Promptly after receipt by an Indemnified Party of any claim or notice of the commencement of any action or administrative or legal proceeding or investigation as to which the indemnity provided in this Section 14.02 may apply, the Indemnified Party shall notify the Indemnifying Party of such fact. Any failure of or delay in such notification shall not affect the Indemnifying Party's obligation to indemnify the Indemnified Party unless such failure or delay is materially prejudicial to the Indemnifying Party.

(d) In the event Indemnifying Party is a municipality or other governmental entity, Indemnifying Party will be subject to the indemnification obligations set forth in Appendix F in lieu of the indemnification obligations set forth in this Section 14.02.

Section 14.03 Risk of Loss. Except under situations of negligence, gross negligence, or intentional wrong-doing by the other Party, each Party shall have the full risk of loss for its own property and material, and each Party shall (subject to Article XIII) obtain and maintain insurance coverage accordingly under its own insurance and risk management procedures. To the extent permitted by each Party's insurer, at no additional cost to that Party, each Party shall require its property insurer to waive the right of subrogation. Each Party shall have title and risk of loss for those materials or capital equipment purchased for its ownership by the other Party as an authorized agent under this Interconnection Agreement confirmed by written confirmation and approval of supplier, specifications, equipment warranty, delivery and installation arrangements (the principal being entitled to any sales tax exemptions). All such equipment and materials will be inspected by the purchasing agent Party upon delivery and damaged or nonconforming equipment or materials will be rejected and returned to the seller upon consultation and agreement with the Party for whom the equipment was purchased.

ARTICLE XV
DEFAULT AND TERMINATION

Section 15.01 Default by Interconnection Customer.

(a) In the event the Interconnection Customer fails, for any reason other than a billing dispute as described in Section 9.03, to make payment to Transmission Provider on or before the due date as described herein, and such failure of payment is not cured within thirty (30) calendar days after Transmission Provider notifies Interconnection Customer of such failure, a default by Interconnection Customer shall be deemed to exist.

In the event of an uncured default by Interconnection Customer for nonpayment, except when nonpayment is the subject of a billing dispute as provided in Section 9.03, Transmission Provider may initiate a proceeding with the FERC to terminate service but shall not terminate service until the FERC so approves any such request. In the event of a billing dispute between Transmission Provider and Interconnection Customer, Transmission Provider will continue to provide service under this Interconnection Agreement as long as the Interconnection Customer (1) continues to make all payments not in dispute, and (2) subjection to Section 9.03, pays into an independent escrow account the portion of the invoice in dispute, pending resolution of such dispute. If Interconnection Customer fails to meet these two requirements for continuation of service, then Transmission Provider may provide notice to the Interconnection Customer of its intention to suspend service in accordance with the Tariff or FERC policy.

(b) Interconnection Customer shall also be in default if it materially breaches any other provision of this Interconnection Agreement, and fails to cure any such breach within thirty (30) days after written notice by Transmission Provider of the existence and nature of such alleged breach.

(c) If Interconnection Customer assigns its interests under this Interconnection Agreement to a bank, lender or other financial institution for purposes of obtaining financing ("Financing Party"), and Interconnection Customer notifies Transmission Provider of this assignment and the information necessary for

Transmission Provider to contact Financing Party, then Transmission Provider shall also notify Financing Party of any breach or default by Interconnection Customer under this Interconnection Agreement at the same time as it notifies Interconnection Customer of such breach or default. If Financing Party elects to cure the breach or default, by payment or otherwise, then Transmission Provider agrees to accept such cure by Financing Party as if the same had been effected by Interconnection Customer.

Section 15.02 Default by Transmission Provider. Transmission Provider shall be considered in default if it fails to make any payment due to Interconnection Customer hereunder, or fails to cure any material breach, within thirty (30) days after written notice of nonpayment or material breach from Interconnection Customer.

Section 15.03 Termination for Default. Should a Party fail to cure a default within the applicable cure period, and the default is not contested pursuant to the dispute resolution process provided in Section 16.01 or other legal processes, the non-defaulting Party shall have the right to terminate this Interconnection Agreement subject to FERC approval and other defenses by giving written notice to the Party in default, and be relieved of any further obligation hereunder, and whether or not the non-defaulting Party terminates this Interconnection Agreement, to recover from the defaulting Party all amounts due hereunder, plus all other damages and remedies to which the non-defaulting Party is entitled subject to the limitations set forth in Article XIV of this Interconnection Agreement. The provisions of this Article XV shall survive termination of this Interconnection Agreement.

ARTICLE XVI
DISPUTE RESOLUTION

Section 16.01 Dispute Resolution Process. In the event the Parties are required by this Interconnection Agreement or mutually agree to try and resolve a dispute, the Parties shall first refer the dispute to designated senior representatives, with authority to bind their respective Party, for resolution on an informal basis as promptly as practicable. In the event the designated representatives are unable to resolve the dispute within thirty (30) days, or such other period as the Parties may mutually agree, such dispute may either be submitted to the alternative dispute resolution provisions set out in Article 12 of the Tariff, if agreed to by the Parties, or the aggrieved Party may initiate legal proceedings at the Commission or court of competent jurisdiction.

ARTICLE XVII
CONFIDENTIAL INFORMATION

Section 17.01 Furnishing of Information. It is recognized by the Parties that the successful operation of this Interconnection Agreement depends upon the cooperation by the Parties in the operation of their systems. As a part of such cooperation, subject to the limitations regarding disclosing confidential information provided in this Interconnection Agreement, each Party agrees that it will furnish to the other Party such data concerning its system as may be necessary to support the other Party's system reliability.

Section 17.02 Confidential Information.

(a) “Confidential Information" means (1) any confidential, proprietary or trade secret information of a plan, specification, pattern, procedure, design, device, drawing, list, concept, customer information, policy or compilation relating to the present or planned business of a Party, which is designated as Confidential Information by the Party supplying the information, whether conveyed orally, electronically, in writing, through inspection, or otherwise; or (2) any Critical Energy Infrastructure Information. Confidential Information which includes, without limitation, all information relating to a Party's technology, research and development, business affairs, and pricing, and any information supplied by a Party to another Party on a confidential basis prior to the execution of this Interconnection Agreement.

(b) Confidential Information shall not include information that the receiving Party can demonstrate: (1) is generally available to the public other than as a result of a disclosure by the receiving Party; (2) was in the lawful possession of the receiving Party on a non confidential basis before receiving it from the disclosing Party; (3) was supplied to the receiving Party without restriction by a third party, who, to the knowledge of the receiving Party, was under no obligation to the other Party to keep such information confidential; (4) was independently developed by the receiving Party without reference to Confidential Information of the disclosing Party; or (5) is, or becomes, publicly known, through no wrongful act or omission of the receiving Party or breach of this Interconnection Agreement.

Information designated as Confidential Information will no longer be deemed confidential if the Party that designated the information as Confidential Information notifies the other Parties that such information no longer is confidential.

(c) Information is Confidential Information only if it is clearly designated or marked in writing as confidential on the face of the document; or, if the information is conveyed orally or by inspection, the Party providing the information orally informs the receiving Party that the information is confidential. Each Party shall be responsible for clearly designating or marking information governed by FERC's Critical Energy Infrastructure Information rules and regulations.

Section 17.03 Protection of Confidential Information.

(a) No Party shall disclose any Confidential Information of the other Party obtained pursuant to or in connection with the performance of this Interconnection Agreement to any third party without the express written consent of the providing Party; provided, however, that any Party may produce Confidential Information in response to a subpoena, discovery request or other compulsory process issued by a judicial body or Governmental Authority upon reasonable notice to the providing Party that (a) a protective order from such jurisdictional judicial body or court has been issued relating to the Confidential Information; and (b) a binding nondisclosure agreement is in effect with a proposed recipient of any Critical Energy Infrastructure Information.

(b) The Parties shall use at least the same standard of care to protect Confidential Information they receive as they use to protect their own Confidential Information from unauthorized disclosure, publication or dissemination.

(c) Any Party may use Confidential Information solely: (1) to fulfill its obligations to the other Party, under this Interconnection Agreement; (2) to fulfill its regulatory requirements except to the extent that such information constitutes or has been designated Critical Energy Infrastructure Information; (3) in any proceeding or in any administrative agency or court of competent jurisdiction addressing any dispute arising under this Interconnection Agreement, subject either to a written confidentiality agreement with all Parties (including, if applicable, an arbitrator(s)) or to a protective order; or (4) as required by Applicable Law. As it pertains to (3) and (4), notwithstanding the absence of a protective order or waiver, a Party may disclose such Confidential Information which, in the opinion of its counsel, the Party is legally compelled to disclose. In the event that the receiving Party is legally requested or required (by oral questions, interrogatories, requests for information or documents, subpoena, civil investigative demand or similar process, or in the opinion of its counsel, by federal or state securities or other statutes, regulations or laws) to disclose any Confidential Information, the receiving Party shall, to the extent permitted under applicable law, promptly notify the disclosing Party of such request or requirement prior to disclosure, so that the disclosing Party may seek an appropriate protective order and/or waive compliance with the terms of this Interconnection Agreement and shall request confidential treatment of any such disclosure.

(d) The Parties agree that monetary damages by themselves may be inadequate to compensate a Party for the other Party's breach of its obligations under this Article. Each Party accordingly agrees that the other Parties are entitled to equitable relief, by way of injunction or otherwise, if it breaches or threatens to breach its obligations under this Article.

Section 17.04 Survival. The confidentiality obligations of this Article shall survive termination of this Interconnection Agreement for a period of two (2) years.

ARTICLE XVIII
MISCELLANEOUS

Section 18.01 Third Party Contracts. The Parties recognize that each has entered into and may in the future enter into contractual commitments with various third parties regarding benefits, use and operation of network transmission facilities it owns within the interconnected regional transmission network. Each Party hereby covenants that its respective contracts with third parties shall not interfere with its obligations to the other Party made under this Interconnection Agreement.

Section 18.02 No Residual Value. This Interconnection Agreement shall not be construed to provide any residual value to either Party or its successors or permitted assigns or any other party, for rights to, use of, or benefits from the other Party's system following expiration of this Interconnection Agreement.

Section 18.03 No Third Party Beneficiary. Unless otherwise specifically provided in this Interconnection Agreement, the Parties do not intend to create rights in or to grant remedies to any third Party as a beneficiary of this Interconnection Agreement or of any duty, covenant, obligation or undertaking established hereunder.

Section 18.04 Headings. Article headings and titles are included for the convenience of Parties and shall not be used to construe the meaning of any provision of this Interconnection Agreement.

Section 18.05 Governing Law. This Interconnection Agreement shall be interpreted and governed by the laws of the state in which the Point of Interconnection is located, or the laws of the United States of America, as applicable.

Section 18.06 Effect of MISO Membership. In the event, during the term hereof, Transmission Provider ceases to be a transmission owning member of a MISO or a successor, all terms and conditions with respect to MISO, or successor(s) herein shall remain in force until amended. Transmission Provider shall be responsible for filing with FERC any modifications to this Interconnection Agreement necessary as a result of such action.

Section 18.07 No Joint System. The Parties each own and operate separate interconnected electric systems, and no provision of the Interconnection Agreement shall be interpreted to mean or imply the Parties have established or intend to establish a jointly-owned electric system, a joint venture, trust, a partnership, or any other type of association.

Section 18.08 Relationship to MISO Tariff. Nothing contained herein shall modify, amend or revise the obligations of the Parties under the MISO Tariff.

Section 18.09 Amendment. Except as provided in Section 11.02, any amendment, alteration, variation, modification or waiver of the provisions of this Interconnection Agreement, other than revisions to the Appendices authorized by this Interconnection Agreement, shall be valid only after it has been reduced to writing and duly signed by both Parties, and if required, approved by the appropriate regulatory bodies.

Section 18.10 Conflicts. In the event any term of this Interconnection Agreement conflicts with the Tariff, the terms of this Interconnection Agreement shall control.

Section 18.11 Waiver. The failure of either Party to enforce or insist upon compliance with or strict performance of any of the terms or conditions of this Interconnection Agreement, or to take advantage of any of its rights thereunder, shall not constitute a waiver or relinquishment of any such terms, conditions, or rights, but the same shall be and remain at all times in full force and effect.

Section 18.12 Counterparts. This Interconnection Agreement may be executed in any number of counterparts, and each executed counterpart shall have the same force and effect as an original instrument.

Section 18.13 Severability. If any governmental authority or court of competent jurisdiction holds that any provision of this Interconnection Agreement is invalid, or if, as a result of a change in any Federal or State law or constitutional provision, or any rule or regulation promulgated pursuant thereto, any provision of this Interconnection Agreement is rendered invalid or results in the impossibility of performance thereof, the remainder of this Interconnection Agreement not affected thereby shall continue in full force and effect. In such an event, the Parties shall promptly renegotiate in good faith new provisions to restore this Interconnection Agreement as nearly as possible to its original intent and effect.

SIGNATURES

In Witness Whereof, the Parties have caused this Interconnection Agreement to be duly executed as of this 8th day of May 2015.

CITY OF ADA, MINNESOTA
A Minnesota municipal corporation

By: /s/ James Leiman

Name: James Leiman

Title: City Administrator

Date: May 8, 2015

NORTHERN STATES POWER COMPANY,
A Minnesota corporation, and
NORTHERN STATES POWER COMPANY,
A Wisconsin corporation

By: /s/ I.R. Benson

Name: Ian R. Benson

Title: Director, Transmission Planning & Business Relations

Date: 4/24/15

Xcel Energy Services Inc.
Authorized Agent

APPENDIX A

IDENTIFICATION OF POINTS OF INTERCONNECTION AND FACILITIES

A-1: Ada Distribution Substation - Point of Interconnection # 1 (POI # 1)

A-2: West Distribution Substation - Point of Interconnection # 2 (POI # 2)

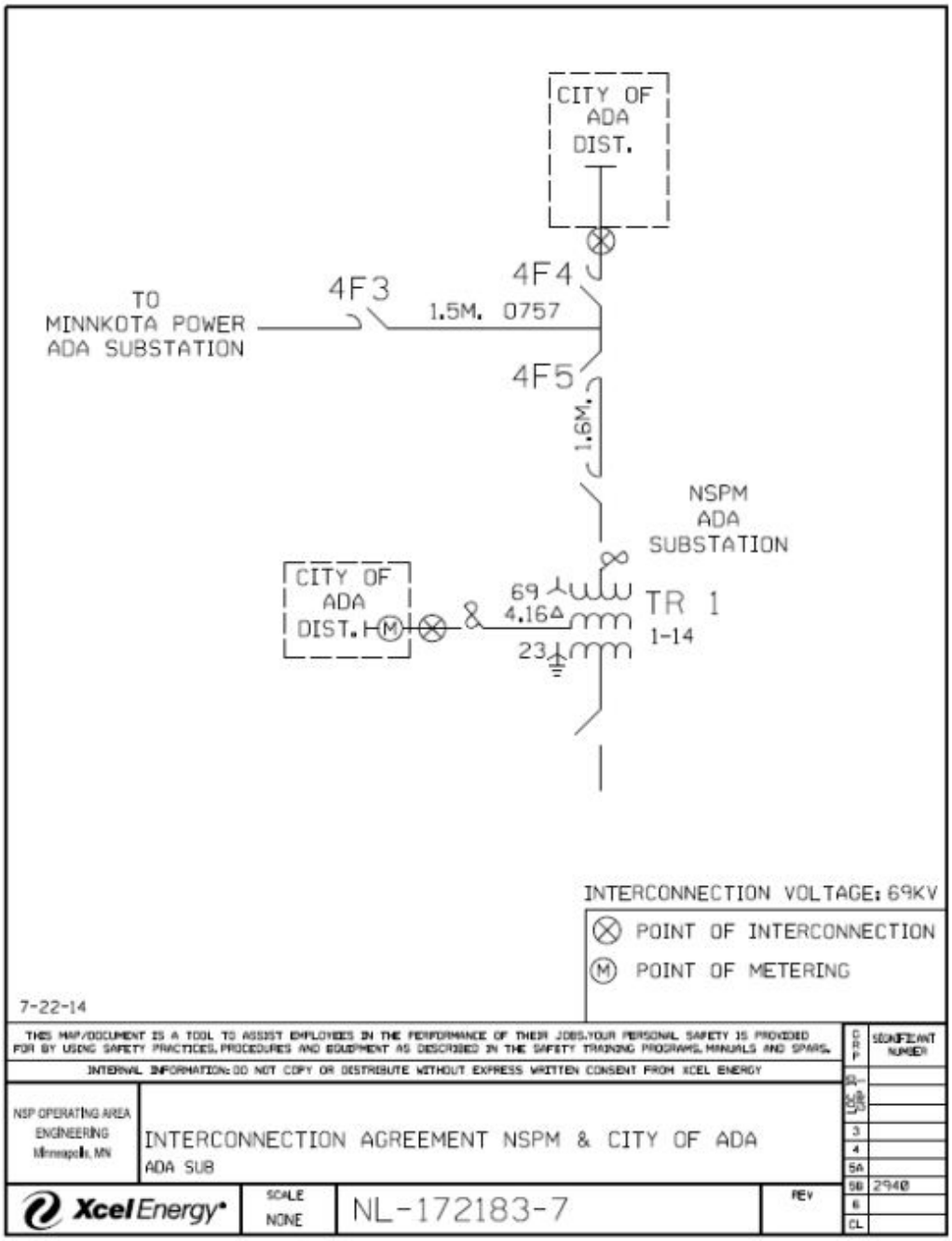

APPENDIX A-1

Point of Interconnection # 1 (POI # 1): Ada Distribution Substation

This Point of Interconnection is located where NSPM's conductor from its 69-23-4.16kV substation interconnects with Interconnection Customer's 4.16kV substation. NSPM owns the conductor, the insulating bells and associated mounting hardware attached to NSPM's substation. The Interconnection Customer owns the jumpers and mounting hardware where NSPM's conductor interconnects with Interconnection Customer's substation.

The description from the real property related to this Point of Interconnection is as follows: a point located at the intersection of 9th Street SE and East Thorpe Ave, Ada, Minnesota with legal description as the ¼ NW of the ¼ NW of Section 15, Township 144 N, Range 46 W, City of Ada, Norman County, Minnesota.

The transfer of power and energy shall be measured at the metering point at Interconnection Customer distribution voltage by a recording integrated 15-minute demand watt-hour meter and a var-hour meter or by digital metering equipment of equivalent capability. Meters and associated metering equipment shall be provided, owned, and maintained by NSPM. Interconnection Customer shall provide and install a meter enclosure in a suitable location and conduit and supports for the metering transformers. The metering transformers and color code metering wire, provided by NSPM, shall be installed by the Interconnection Customer.

The meter readings shall be compensated to account for transformer losses to the 69kV voltage. The compensation shall be done by multiplying the energy flows by 1.01, unless otherwise agreed. For MDMA purposes, NSPM shall provide metered data to MISO based on NSPM's meter readings.

The applicable Interconnection Provisions for Point of Interconnection # 1 are set forth in Appendix E-1.

APPENDIX A-2

Point of Interconnection # 2 (POI # 2): West Distribution Substation

This Point of Interconnection is located at the connecting hardware where NSPM's transmission line # 0757, structure # 0757-31 interconnects with Interconnection Customer owned tap span into Interconnection Customer's 69-4.16kV distribution substation.

The description from the real property related to this Point of Interconnection is as follows: a point located at the intersection of South Jamison Drive and West 4th Ave. South, Ada, Minnesota with legal description as the ¼ SE of the ¼ NE of Section 17, Township 144 N, Range 46 W, City of Ada, Norman County, Minnesota.

The transfer of power and energy shall be measured at the metering point at Interconnection Customer distribution voltage by a recording integrated 15-minute demand watt-hour meter and a var-hour meter or by digital metering equipment of equivalent capability. Meters and associated metering equipment shall be provided, owned, and maintained by NSPM. Interconnection Customer shall provide and install a meter enclosure in a suitable location and conduit and supports for the metering transformers. The metering transformers and color code metering wire, provided by NSPM, shall be installed by the Interconnection Customer.

The meter readings shall be compensated to account for transformer losses to the 69kV voltage. The compensation shall be done by multiplying the energy flows by 1.01, unless otherwise agreed. For MDMA purposes, NSPM shall provide metered data to MISO based on NSPM's meter readings.

The applicable Interconnection Provisions for Point of Interconnection # 2 are set forth in Appendix E-2.

APPENDIX B

NOTICES

Any notice, demand, request, or communication required or authorized by this Interconnection Agreement shall be hand delivered or mailed by certified mail, return receipt requested, with postage prepaid, to Parties, and may also provide a courtesy copy of such notice, demand, request, or communication via electronic mail, or email, as follows:

For Customer:

City of Ada
City Administrator
900 West Main Street, Industrial Park
Ada, MN 56510

For Transmission Provider:

Xcel Energy
Manager, Transmission Business Relations
414 Nicollet Mall, MP 8
Minneapolis, MN 55401

For Invoices:

City Clerk
City of Ada
Drawer 32
Ada, MN 56510
218-784-5520

Xcel Energy Services, Inc.
Transmission Accounting
1800 Larimer, 12th floor
Denver, CO 80202
303-571-2782

For Operational Matters:

City of Ada
Electric Supervisor
218-784-5537

Transmission Control Center (MN)
Northern States Power Company
612-321-7431

This designation and titles of the person to be notified or the address of such person may be changed at any time by written notice.

APPENDIX C

Template for Adding a New Point of Interconnection

The Parties understand that it may be necessary to add a Point of Interconnection. Should the Parties agree to add a Point of Interconnection, Interconnection Customer and Transmission Provider shall use the following form or another that is substantially similar to it for purposes of documenting their mutual agreement and to update the Point of Interconnection described in Appendix A to this Interconnection Agreement:

Facilities are located in_____

Included hereafter are the Interconnection Provisions and Interconnection Diagram for this Point of Interconnection and a completed Appendix E documenting the respective responsibilities of the Parties.

The costs of such Facilities shall be borne by Interconnection Customer or Transmission Provider as provided in Attachment U-1 to the Tariff.

In Witness Whereof, the Parties have confirmed these Interconnection Provisions to become part of Transmission to Load Interconnection Agreement between the Parties dated _____ __, 20__, and to be duly executed as of this ____ day of _____, 20___.

CITY OF ADA
A Minnesota municipal corporation

By: _____

Name: _____

Title: _____

Date: _____

NORTHERN STATES POWER COMPANY
A Minnesota corporation and
NORTHERN STATES POWER COMPANY,
A Wisconsin corporation

By: _____

Name: _____

Title: _____

Date: _____

By Xcel Energy Services Inc.
Authorized Agent

APPENDIX D

Template for Modifying or Removing Point of Interconnection

The Parties understand that it may be necessary to modify or remove Point of Interconnection. Should the Parties agree to modify or remove, Interconnection Customer and Transmission Provider shall use the following form or another that is substantially similar to it for purposes of documenting their mutual agreement and to update the Point of Interconnection described in Appendix A to this Interconnection Agreement:

Facilities are located in_____

Included hereafter are the Interconnection Provisions and Interconnection Diagram for this Point of Interconnection and a completed Appendix E documenting the respective responsibilities of the Parties.

The costs of such Facilities shall be borne by Interconnection Customer or Transmission Provider as provided in Attachment U-1 to the Tariff.

In Witness Whereof, the Parties have confirmed these Interconnection Provisions to become part of Transmission to Load Interconnection Agreement between the Parties dated _____ __, 20__, and to be duly executed as of this ____ day of _____, 20___.

CITY OF ADA
A Minnesota municipal corporation
By: _____

Name: _____

Title: _____

Date: _____

NORTHERN STATES POWER COMPANY
A Minnesota corporation and
NORTHERN STATES POWER COMPANY,
A Wisconsin corporation

By: _____

Name: _____

Title: _____

Date: _____

By Xcel Energy Services Inc.
Authorized Agent

APPENDIX E-1

INTERCONNECTION PROVISIONS

ADA DISTRIBUTION SUBSTATION AND RELATED TRANSMISSION SYSTEM MODIFICATIONS
OWNERSHIP, OPERATION AND MAINTENANCE PROVISIONS

Description	Owner	Operator	Maintenance Responsibility	Financial Responsibility For Construction	Financial Responsibility For O&M	Financial Responsibility For Replacement	Responsibility to Accomplish Engineering Design and Construction
SUBSTATION							
Ada 69-23-4.16kV Substation.	NSPM	NSPM	NSPM	NSPM	NSPM	NSPM	NSPM
Ada 4.16kV Distribution Substation.	IC	IC	IC	IC	IC	IC	IC
Conductor from NSPM's Substation to IC's Substation with associated bells and mounting hardware.	NSPM	NSPM	NSPM	NSPM	NSPM	NSPM	NSPM
Switches on IC's Substation with associated bells and mounting hardware.	IC	IC	IC	IC	IC	IC	IC
TRANSMISSION							
69kV Transmission Line W0757	NSPM	NSPM	NSPM	NSPM	NSPM	NSPM	NSPM
Wood pole structure W0757-61 and associated guy wires and anchors required to support 69kV tap line.	NSPM	NSPM	NSPM	NSPM	NSPM	NSPM	NSPM
METERING &TELEMETRY							
Metering equipment, instrument transformers and ancillary equipment (meter wiring & meter socket)	IC	IC	IC	IC	IC	IC	IC
Recording integrated 15-minute demand watt-hour and var-hour meter	NSPM	NSPM	NSPM	NSPM	NSPM	IC	NSPM

NSPM = Northern States Power Company Minnesota, IC = Interconnection Customer

APPENDIX E-2

INTERCONNECTION PROVISIONS

WEST DISTRIBUTION SUBSTATION AND RELATED TRANSMISSION SYSTEM MODIFICATIONS
OWNERSHIP, OPERATION AND MAINTENANCE PROVISIONS

Description	Owner	Operator	Maintenance Responsibility	Financial Responsibility For Construction	Financial Responsibility For O&M	Financial Responsibility For Replacement	Responsibility to Accomplish Engineering Design and Construction
SUBSTATION							
West 69-4.16kV Distribution Substation.	IC	IC	IC	IC	IC	IC	IC
TRANSMISSION							
69kV Transmission Line W0757	NSPM	NSPM	NSPM	NSPM	NSPM	NSPM	NSPM
One (1) two-way 69kV switch 4F4 & 4F5 mounted on wood pole structure W0757-31.	NSPM	NSPM	NSPM	NSPM	NSPM	NSPM	NSPM
One 69kV tap line of 3 phase wires and associated guy wires and anchors required to support 69kV tap line (approx. 0.28 miles).	IC	IC	IC	IC	IC	IC	IC
METERING &TELEMETRY							
Metering equipment, instrument transformers and ancillary equipment (meter wiring & meter socket)	IC	IC	IC	IC	IC	IC	IC
Recording integrated 15-minute demand watt-hour and var-hour meter	NSPM	NSPM	NSPM	NSPM	NSPM	IC	NSPM

NSPM = Northern States Power Company Minnesota, IC = Interconnection Customer

APPENDIX F-1

INSURANCE AND INDEMNIFICATION OBLIGATIONS FOR

A MINNESOTA MUNICIPALITY

A. Insurance Coverages. If Interconnection Customer is subject to Minn. Stat. § 466.04, as amended from time to time, or any successor statute, Interconnection Customer shall, at its own expense, maintain in force until this Interconnection Agreement is terminated or until released by Transmission Provider, insurance coverages equal to the maximum limitation on liabilities set forth in Minn. Stat. § 466.04.

Interconnection Customer shall use its best efforts to ensure that Transmission Provider and its parent, associated and Affiliate companies and their respective directors, officers, agents, servants and employees shall be named as an additional insured under Interconnection Customer's Commercial General Liability Insurance policy, at Transmission Provider's expense, if any, for all incremental costs. The additional insured coverage for Transmission Provider shall be up to $500,000 per claimant, and $1,500,000 for all claims arising out of a single occurrence (or other amounts, if higher, consistent with the Interconnection Customer's policy and state law), without diminishing Interconnection Customer's ability to recover its own liabilities under the policy.

In the event that Interconnection Customer cannot obtain such insurance coverage for the Transmission Provider and its parent, associated and Affiliate companies and their respective directors, officers, agents, servants and employees, or in the event that such coverage would be at an unacceptably high expense to Transmission Provider, then the Parties shall make good-faith efforts to negotiate mutually agreeable alternative arrangements.

Notwithstanding the foregoing, nothing herein shall prevent Transmission Provider and Interconnection Customer from agreeing to different insurance limits from those provided in this Appendix F-1. In such a case, the Parties shall set forth the mutually agreed-to insurance coverages in this Appendix F-1.

B. Indemnification. Subject to any applicable Minnesota law or statute limiting the indemnification obligations of Interconnection Customer to Transmission Provider, Interconnection Customer shall at all times indemnify, defend and hold harmless Transmission Provider, its shareholders, members, partners, Affiliates, employees, consultants, representatives, agents, successors and permitted assigns ("Indemnified Party") from any and all liability, damages, losses and claims, including claims and actions relating to injury to or death of any person or damage to property, demand, suits, recoveries, costs and expenses, court costs, attorney fees and all other obligations by or to third parties, arising out of or resulting from Interconnection Customer's ("Indemnifying Party") negligence, or action or inactions of its obligations under this Interconnection Agreement, except in cases of negligence, gross negligence or intentional wrongdoing by the Indemnified Party.

Interconnection Customer's obligations to Transmission Provider under this paragraph shall be limited to $1,500,000 per occurrence.

APPENDIX G

DISTRIBUTION SUBSTATION FACILITIES CHARGE RIDER
CITY OF ADA

1.0 Service

This Service Schedule provides service where Transmission Provider provides the distribution substation and all required associated facilities at the Point of Interconnection to provide delivery at Interconnection Customer's primary distribution voltage. Transmission Provider shall furnish an adequate step-down substation to deliver Interconnection Customer's purchases of power and energy from the Point of Interconnection described in Appendix A. This Service Schedule G shall be effective for an initial period of ten years, if not then terminated in accordance with Section 3.01, it shall remain in full force and effect until so terminated.

2.0 Rates and Charges

(A) Monthly Facilities Charge: Interconnection Customer shall pay Transmission Provider a monthly Facilities Charge in an initial amount of $769.00 commencing May 30, 1995. This Revision No. 2 of this Service Schedule reflects only the FERC accepted charges. Any future proposed revisions to this Service Schedule will be filed at the FERC along with the appropriate cost support.

(B) Notwithstanding Section 2.0(a) of this Service Schedule, in the event that additional investments are made by Transmission Provider to improve or expand Transmission Provider's Ada Substation, the Facilities Charge will be re-determined in proportion to the ratio of Interconnection Customer's peak load to the sum of the Parties' peak load.

3.0 Billing and Payment

(A) Unless otherwise agreed, bills for services provided hereunder shall be rendered by the fifth working day of each month for services provided during the previous month. Interconnection Customer's payment to Transmission Provider shall be due, if by mail, at Transmission Provider's billing office, or if by wire transfer to a bank and account named by Transmission Provider, no later than 15 days following the date of such invoice.

(B) Late Payment Charge: Payments received after the due date shall be considered late and shall bear interest on the payment in accordance with Section 9.02.

4.0 List of Substation Facilities

This Distribution Substation Facilities Charge allows Interconnection Customer to utilize the following Transmission Provider substation facilities:

(A) NSP Ada Substation, which is located in the NW ¼ of the NW ¼ of Sec. 15, T. 144 N., R. 46 W., Norman County, Minnesota. Said substation has one 69-23-4.16kV, 4200KVA transformer.

592-NSP StJms-Tran to Load Intercon Svc Version: 0.0.0 Effective: 1/1/2016

Service Agreement No. 592-NSP

Service Agreement for Transmission to Load Interconnection Service

Between

Northern States Power Company, a Minnesota corporation,

Northern States Power Company, a Wisconsin corporation

and

City of St. James, a Minnesota municipal corporation

Dated as of _October 30, 2015

VERSION 0.0.0.

TABLE OF CONTENTS

ARTICLE I DEFINITIONS 5

Section 1.01 ..... Rules of Construction 5

Section 1.02 ..... Good Faith and Fair Dealing 6

Section 1.03 ..... General Provisions 6

Section 1.04 ..... Definitions 7

ARTICLE II SCOPE 10

Section 2.01 ..... Scope of Interconnection Agreement 10

Section 2.02 Facilities Served 11

ARTICLE III TERMS AND TERMINATION 11

Section 3.01 ..... Term 11

Section 3.02 ..... Early Termination 11

Section 3.03 ..... Survival 11

ARTICLE IV OWNERSHIP, CONSTRUCTION, OPERATION AND MAINTENANCE 12

Section 4.01 ..... Summary Description 12

Section 4.02 Interconnection Customer Interconnection Facilities and System Protection Facilities.. 12

Section 4.03 ..... Transmission Provider Interconnection Facilities 12

Section 4.04 ..... Network Upgrades 12

Section 4.05 ..... Modifications to Interconnection Facilities 13

Section 4.06 ..... Ownership of Transmission Provider Interconnection Facilities and Network Upgrades 14

Section 4.07 ..... Construction 14

Section 4.08 ..... Reliability Standards 14

Section 4.09 ..... Interconnection Guidelines 14

Section 4.10 ..... Power Factor 15

Section 4.11 ..... Meter Data Management 15

Section 4.12 ..... Access 15

Section 4.13 ..... Right of Installation 16

Section 4.14 ..... Right of Removal 16

Section 4.15 ..... Transfer of Control or Sale of Facilities 16

ARTICLE V OUTAGES AND COORDINATION 16

Section 5.01 ..... Disconnection 16

Section 5.02 ..... Outages 16

Section 5.03 ..... Outage Reporting 17

Section 5.04 ..... Switching and Tagging Rules 17

Section 5.05 ..... Coordination 17

Section 5.06 ..... Emergency 18

ARTICLE VI SAFETY 19

Section 6.01 ..... Safety Standards 19

ARTICLE VII ENVIRONMENTAL CONSIDERATIONS 19

Section 7.01 ..... Environmental Considerations 19

ARTICLE VIII FORCE MAJEURE 20

Section 8.01 ..... Effect of Declaring Force Majeure 20

Section 8.02 ..... Procedures for Declaring Force Majeure 20

ARTICLE IX BILLING AND PAYMENT 20

Section 9.01 ..... Billing Procedure 20

Section 9.02 ..... Interest on Unpaid Balances 20

Section 9.03 ..... Billing Disputes 20

ARTICLE X NOTICES 21

Section 10.01 ..... Notices 21

ARTICLE XI REGULATION AND MODIFICATION OF RATES 21

Section 11.01 ..... Regulation 21

Section 11.02 ..... Modification 21

ARTICLE XII ASSIGNMENT 21

Section 12.01 ..... Successors and Assigns 21

Section 12.02 ..... Assignment Restrictions 21

ARTICLE XIII INSURANCE 22

Section 13.01 ..... Applicability 22

Section 13.02 ..... Insurance 22

ARTICLE XIV CONSEQUENTIAL DAMAGES, INDEMNITY AND RISK OF LOSS 23

Section 14.01 ..... Waiver of Consequential Damages 23

Section 14.02 ..... Indemnity 24

Section 14.03 ..... Risk of Loss 24

ARTICLE XV DEFAULT AND TERMINATION 24

Section 15.01 ..... Default by Interconnection Customer 24

Section 15.02 ..... Default by Transmission Provider 25

Section 15.03 ..... Termination for Default 25

ARTICLE XVI DISPUTE RESOLUTION 26

Section 16.01 ..... Dispute Resolution Process 26

ARTICLE XVII CONFIDENTIAL INFORMATION 26

Section 17.01 ..... Furnishing of Information 26

Section 17.02 ..... Confidential Information 26

Section 17.03 ..... Protection of Confidential Information 27

Section 17.04 ..... Survival 27

ARTICLE XVIII MISCELLANEOUS 27

Section 18.01 ..... Third Party Contracts 27

Section 18.02 ..... No Residual Value 28

Section 18.03 ..... No Third Party Beneficiary 28

Section 18.04 ..... Headings 28

Section 18.05 ..... Governing Law 28

Section 18.06 ..... Effect of MISO Membership 28

Section 18.07 ..... No Joint System 28

Section 18.08 ..... Relationship to MISO Tariff 28

Section 18.09 ..... Amendment 28

Section 18.10 ..... Conflicts 28

Section 18.11 ..... Waiver 28

Section 18.12 ..... Counterparts 28

Section 18.13 ..... Severability 28

SIGNATURES 30

This TRANSMISSION TO LOAD INTERCONNECTION AGREEMENT ("Interconnection Agreement") is dated as of this 1st day of January, 2016, between City of St. James, a municipal corporation in the County of Watonwan, State of Minnesota, hereinafter called "Interconnection Customer", and Northern States Power Company, a Minnesota corporation ("NSPM") and Northern States Power Company, a Wisconsin corporation ("NSPW"), hereinafter jointly called "NSP" or "Transmission Provider". For purposes of this Interconnection Agreement, "Party" shall mean Interconnection Customer or Transmission Provider, and "Parties" shall mean Interconnection Customer and Transmission Provider.

RECITALS

0.01 **WHEREAS,** NSPM and NSPW are, *inter alia*, investor-owned electric utilities engaged in the business of generating, transmitting, distributing, and selling electric power and energy and related services in the States of Minnesota, North Dakota, South Dakota, Wisconsin and Michigan subject to, *inter alia*, the jurisdiction of the Federal Energy Regulatory Commission ("FERC"); and

0.02 **WHEREAS**, NSPM and NSPW operate an integrated electric transmission system ("NSP System" or "Transmission Provider's Transmission System") pursuant to the "Restated Agreement to Coordinate Planning and Operations and Interchange Power and Energy" between NSPM and NSPW ("Interchange Agreement"); and

0.03 **WHEREAS**, Transmission Provider has filed and the FERC has accepted the Xcel Energy Operating Companies Open Access Transmission Tariff ("Tariff"), as amended or supplemented from time to time, through which interconnection service to Interconnection Customer is to be provided; and

0.04 **WHEREAS,** Interconnection Customer is a municipal utility and owns and operates load serving electric distribution facilities in the State of Minnesota; and

0.05 **WHEREAS,** Interconnection Customer desires interconnection service at the Interconnection Customer's Interconnection Facilities; and

0.06 **WHEREAS**, the Parties agree to execute this Interconnection Agreement to provide the terms and conditions for interconnection of Interconnection Customer's facilities with Transmission Provider's electrical system and to define the continuing rights, responsibilities, and obligations of the Parties with respect to the use of certain of their own and the other Party's property, assets, and facilities; and

0.07 **WHEREAS**, the Parties desire to avail themselves of mutual benefits of coordinating the development and operations of their respective systems with respect to the Interconnection Facilities.

NOW THEREFORE, the Parties agree as follows:

ARTICLE I
DEFINITIONS

Section 1.01 Rules of Construction

Capitalized terms used in this Interconnection Agreement shall have the meanings set forth above, in this Article I, or as set forth in the Tariff, whether in the singular or the plural or in the present or past tense. Other terms used in this Interconnection Agreement but not so defined shall have meanings as commonly used in the English language and, where applicable, in Good Utility Practice. Words not otherwise defined herein that have well-known and generally accepted technical or trade meanings are used herein in accordance with such recognized meanings.

Section 1.02 Good Faith and Fair Dealing

The Parties shall act reasonably and in accordance with the principles of good faith and fair dealing in the performance of this Interconnection Agreement. Unless expressly provided otherwise in this Interconnection Agreement or in the Tariff, (a) where the consent, approval, or similar action is required by a Party, such consent or approval shall not be unreasonably withheld, conditioned or delayed; and (b) wherever a Party has the right to determine, require, specify or take similar action with respect to a matter, such determination, requirement, specification or similar action shall be reasonable.

Section 1.03 General Provisions

The Parties recognize and agree that this Interconnection Agreement is entered into pursuant to and in accordance with NSP's obligations as a Transmission Provider under the Tariff and that NSP is acting in such capacity in entering into this Interconnection Agreement.

(a) In the event Interconnection Customer enters into any agreements with NSP or an Affiliate that are not in NSP's capacity as a Transmission Provider under the Tariff (*e.g.*, power purchase or retail service agreements), the Parties acknowledge and agree that such agreements shall be deemed to be separate and free-standing contracts that do not alter the terms of this Interconnection Agreement except to the extent specified therein.

(b) This Interconnection Agreement shall not be construed to create any rights between Interconnection Customer and Transmission Provider for any purpose other than providing Interconnection Service for the facilities described herein. Specifically, this Interconnection Agreement does not provide Interconnection Customer with any transmission, ancillary or other services under the Tariff.

(c) This Interconnection Agreement shall apply to interconnections of load and distribution systems, including, as applicable, generation resources (i) used to serve load which are interconnected to Interconnection Customer's distribution facilities and (ii) located on Interconnection Customer's side of the Point of Interconnection to the Transmission Provider's Transmission System. This Interconnection Agreement shall not apply to interconnections which materially support the transmission of electricity across Transmission Provider's Transmission System. The determination of whether this Interconnection Agreement applies to an interconnection request shall be made by Transmission Provider, in its sole reasonable discretion, on a comparable and non-discriminatory basis in accordance with Good Utility Practice.

(d) Except to the extent precluded by an Emergency, Force Majeure, Forced Outage or compliance with Applicable Law (including for the avoidance of doubt those necessary to comply with Reliability Standards), Transmission Provider shall reasonably consult with Interconnection Customer, and as appropriate negotiate an amendment to this Agreement, whenever (i) Transmission Provider requires Interconnection Customer to add, modify or improve its facilities that are the subject of this Interconnection Agreement; or (ii) Transmission Provider requires Interconnection Customer to change its operation standards or practices, or operation of facilities that are the subject of this Interconnection Agreement, including curtailment procedures or practices. The requirements set forth in (i) and (ii) in the preceding sentence shall be applied on a comparable, just and reasonable and non-discriminatory basis in accordance with Good Utility Practice, as applicable, and Attachment U-1, as applicable.

(e) Any costs allocated to Interconnection Customer by Transmission Provider under this Agreement shall be in accordance with Attachment U-1 of the Tariff.

Section 1.04 Definitions

"Affiliate" shall have the meaning set forth in Section 1.1 of the Tariff.

"Applicable Law" shall mean all duly promulgated applicable federal, state and local laws, regulations, rules, ordinances, codes, decrees, judgments, directives, or judicial or administrative orders, permits and other duly authorized actions of any Governmental Authority having jurisdiction over a Party or the Parties, as applicable, their respective facilities and/or the respective services they provide.

"Attachment U-1" shall mean the Attachment to the Tariff known as the "Cost Allocation Procedures for Load Interconnections" or "Cost Allocation Procedures" which provides the interconnection request procedures and cost allocation methodology and standards applicable to this Interconnection Agreement.

"Balancing Area" shall mean an electric power system or combination of electric power systems bounded by interconnection metering and telemetering to which a common generation control scheme is applied in order to: (a) match the power output of generation resources within the electric power system(s) and energy delivered from or to entities outside the electric power system(s), with the load within the electric power system(s); (b) maintain scheduled interchange with other Balancing Areas, within the limits of Good Utility Practice; and (c) maintain the frequency of the electric power system(s) within reasonable limits in accordance with Good Utility Practice and the criteria of the NERC and the MRO.

"Balancing Area Operator" shall mean the entity with responsibility for operating and controlling generation and loads affecting Transmission Provider's transmission system. The Balancing Area Operator for the NSP System is the Midwest ISO, or its successor.

"Current Transformer" or "CT" shall mean a current transformer intended for metering, protective, or control purposes and designed to have its primary winding connected in series with a circuit carrying the current to be measured or controlled. A current transformer normally reduces current magnitudes to levels which can be handled by control, protection, and metering equipment.

"Effective Date" shall have the meaning set forth in Section 3.01.

"Emergency" shall mean a condition or situation that in the reasonable good faith determination of the affected Party based on Good Utility Practice contributes to an existing or imminent physical threat of danger to life or a significant threat to health, property or the environment.

"FERC" or "Commission" shall mean the Federal Energy Regulatory Commission, or its successor.

"Financing Party" shall have the meaning set forth in Section 15.01(c).

"Force Majeure" shall have the meaning set forth in Section 10.1 of the Tariff.

"Forced Outage" shall mean in the case of Interconnection Customer's distribution system, taking the distribution system, in whole or in part, out of service by reason of an Emergency or Network Security condition, unanticipated failure or other cause beyond the reasonable control of Interconnection Customer, when such removal from service was not scheduled in accordance with Section 5.02; and, in the case of Transmission Provider taking its transmission system, in whole or in part, out of service by reason of an Emergency or Network Security Condition, unanticipated failure, or other cause beyond the reasonable control of NSP when such removal from service was not scheduled in accordance with Section 5.02.

"Good Utility Practice" shall have the meaning set forth in Article 1 of the Tariff.

"Governmental Authority" shall mean any federal, state, local or other governmental regulatory or administrative agency, court, commission, department, board, or other governmental subdivision, legislature, rulemaking board, tribunal, or other governmental authority having jurisdiction over the Parties, their respective facilities, or the respective services that they provide, and exercising or entitled to exercise any administrative, executive, police, or taxing authority or power; provided, however, that such term does not include Interconnection Customer, Transmission Provider or any Affiliate thereof.

"Indemnified Party" shall have the meaning set forth in Section 14.02.

"Indemnifying Party" shall have the meaning set forth in Section 14.02.

"Initial Period" shall have the meaning set forth in Section 3.01.

"Interconnection Customer Interconnection Facilities" shall mean the equipment owned by Interconnection Customer for purposes of interconnecting to the Transmission Provider Interconnection Facilities, including but not limited to the substation, circuits, circuit breakers, bus work, land easements, relays, communications circuits, and associated equipment and any replacement or additional equipment that Interconnection Customer may install due to equipment failure or to meet changed industry standards and all related instrument transformers, substation and physical structures, all transmission facilities required to access the Point of Interconnection, and Interconnection Customer's metering, relays, electric energy collection network, and generation control equipment. The Interconnection Customer Interconnection Facilities are identified and described in Appendix A.

"Interconnection Facilities" shall mean the Interconnection Customer Interconnection Facilities and Transmission Provider Interconnection Facilities, collectively, as described in Appendix A.

"Interconnection Guidelines" shall mean *Xcel Energy's Interconnection Guidelines For Transmission Interconnected Customer Loads*, as they may be revised from time to time by Transmission Provider and posted on Transmission Provider's website (www.xcelenergy.com), the provisions of which shall apply to the Parties as set forth in this Interconnection Agreement.

"Interconnection Service" shall mean the service Transmission Provider will provide to Interconnection Customer to interconnect the Interconnection Customer Interconnection Facilities to the Transmission Provider's electric system (such facilities being described more fully in Appendix A), and the ongoing operations and maintenance of such facilities.

"Local Balancing Area Operator" or "LBA" shall mean the entity with responsibility for operating and controlling local generation and loads affecting Transmission Provider's transmission system, subject to the authority of the Balancing Area Operator. The Local Balancing Area Operator is the NSP Control Center or its successor.

"Meter Data Management Agent" or "MDMA" shall mean the entity designated by the Interconnection Customer through the execution of any necessary agreements to do so that provides meter data to the Transmission Provider and/or to MISO (as "Transmission Provider" as that term is defined in the MISO Tariff), whichever is applicable.

"Metering Device(s)" shall mean all meters, current and potential transformers, RTU, and data processing equipment used to measure, record, or transmit data relating to the electric power and energy output from, or input to, the Interconnection Customer, as identified in Appendix A. The Metering Point shall be separately identified from the Point of Interconnection.

"MISO" or "Midwest ISO" shall mean the Midwest Independent Transmission System Operator, Inc. or its successor organization.

"MISO Tariff" shall mean MISO's Open Access Transmission, Energy and Operating Reserve Markets Tariff in effect from time to time, as accepted for filing by FERC.

"MRO" shall mean the Midwest Reliability Organization, Inc., or its successor organization.

"NERC" shall mean the North American Electric Reliability Corporation, or its successor organization.

"Network Security" shall mean the ability of the NSP System to withstand sudden disturbances such as unforeseen conditions, electric short circuits or unanticipated loss of system elements.

"Network Upgrade" shall mean the additions, modifications, and upgrades to the NSP System at or beyond the Point of Interconnection.

"NSP Control Center" or "NSPCC" shall mean the NSP Transmission Control Center(s), as identified in Appendix B, responsible for operation of the NSP System, including the Transmission Provider Interconnection Facilities.

"Other Party Group" shall have the meaning set forth in Section 13.01(e).

"Planned Outage" shall mean action by (a) Interconnection Customer to take its equipment, facilities or systems out of service, partially or completely, to perform work on specific components that is scheduled in advance and has a predetermined start date and duration pursuant to the procedures set forth in Section 5.02; or (b) Transmission Provider to take its equipment, facilities and systems out of service, partially or completely, to perform work on specific components that is scheduled in advance and has a predetermined start date and duration pursuant to the procedures set forth in Section 5.02.

"Point of Interconnection" shall mean the physical point or points at which the Interconnection Customer Interconnection Facilities interconnect with the Transmission Provider Interconnection Facilities, as depicted in Appendix A.

"Reasonable Efforts" shall mean, with respect to an action required to be attempted or taken by a Party under the Interconnection Agreement, efforts that are timely and consistent with Good Utility Practice and are otherwise substantially equivalent to those a Party would use to protect its own interests.

"Reliability Standards" shall mean mandatory reliability standards adopted by NERC or MRO and approved by FERC, as amended from time to time, applicable to the facilities owned, and/or operated by Interconnection Customer and Transmission Provider, respectively.

"Remote Terminal Unit" or "RTU" shall mean a device installed at a substation or generation facility, and at the NSPCC, and is used to provide communication for remote control and indication of substation or generation facility equipment from the NSPCC.

"SCADA" shall have the meaning set forth in Section 4.09.

"State Regulatory Commission" shall mean the state regulatory agency with jurisdiction over (a) the retail electric rates and tariffs of NSPM or NSPW where the Point of Interconnection is located, and (b) determination of need or siting for new transmission facilities.

"System Protection Facilities" shall mean the equipment required to protect (a) the Transmission Provider's electric system, the systems of others directly or indirectly interconnected with the Transmission Provider's electric system, and the Transmission Provider's customers from faults occurring on the Interconnection Customer's side of the Point of Interconnection; and (b) Interconnection Customer from faults occurring on the Transmission Provider's electric system or on the systems of others to which the Transmission Provider's electric system is directly or indirectly interconnected.

"Tariff" or "OATT" shall mean the Xcel Energy Operating Companies Open Access Transmission Tariff on file with FERC, as amended from time to time.

"Term" shall mean the period of time during which this Interconnection Agreement shall remain in force and effect.

"TOA" or "Transmission Owners Agreement" shall mean the Agreement of Transmission Facilities Owner to Organize the Midwest Independent Transmission System Operator, Inc. accepted by FERC Order dated September 16, 1998, as amended from time to time and accepted for filing by FERC.

"Transmission Provider Interconnection Facilities" shall mean those facilities owned by the Transmission Provider necessary to establish a physical interconnection between Transmission Provider's existing electric system and the Interconnection Customer Interconnection Facilities at the Point of Interconnection, including but not limited to switches, circuits, circuit breakers, bus work, land easements, relays, communications circuits, and associated equipment, and any replacement or additional equipment that Transmission Provider may install due to equipment failure or to meet changed industry standards. The Transmission Provider Interconnection Facilities are identified and described in Appendix A. The Transmission Provider Interconnection Facilities shall not include Network Upgrades.

"Voltage Transformer" or "VT" shall mean a transformer intended for metering, protective, or control purposes and designed to have its primary winding connected either between the primary conductors to be measured or between a conductor and ground. A voltage transformer normally reduces voltage magnitudes to levels which can be handled by control, protection, and metering equipment. The historic term for a VT is potential transformer.

ARTICLE II
SCOPE

Section 2.01 Scope of Interconnection Agreement

(a) General. Transmission Provider shall provide Interconnection Service to Interconnection Customer as provided herein. This Agreement supersedes any prior interconnection agreement(s) between the Parties through which the Interconnection Customer's Interconnection Facilities were interconnected to Transmission Provider's electrical system. However, unless listed, any other agreements or schedules under which services are or may be provided shall remain in force. Specifically, this Interconnection Agreement supersedes the following agreement(s) as of the Effective Date: Revised and Restated Municipal Transmission Service Agreement, Revision 2 accepted for filing effective December 17, 2014 in FERC Docket No. ER15-205-000 et al.

(b) Limited Scope of Interconnection Agreement. This Interconnection Agreement sets forth the terms and conditions of Interconnection Service provided by Transmission Provider to Interconnection Customer. Although the Transmission Provider intends this Interconnection Agreement to be a service agreement under the Tariff, the establishment of Interconnection Service under this Interconnection Agreement does not in itself entitle Interconnection Customer to receive any services under the Tariff other than the Interconnection Service, as provided for herein. Any other services that Interconnection Customer may require, such as transmission service, must be separately arranged under the Tariff or MISO Tariff in accordance with the terms and conditions of such tariff, and paid for by Interconnection Customer or other user of such services.

(c) Other Arrangements. Interconnection Customer is responsible for making arrangements for the power supply of its load requirements and delivery of capacity and energy to its system. The establishment of an interconnection under this Interconnection Agreement does not in itself entitle Interconnection Customer to obtain any services from the Transmission Provider that may be subject to the jurisdiction of FERC, or the State

Regulatory Commission; Interconnection Customer must arrange for any such services in accordance with the applicable provider's tariff or service requirements.

Section 2.02 Facilities Served. The scope of the Interconnection Service provided hereunder is based on Interconnection Customer's description of its facilities (including the Interconnection Customer Interconnection Facilities), and Transmission Provider's description of its facilities (including the Transmission Provider Interconnection Facilities), as set forth in Appendix A.

ARTICLE III
TERMS AND TERMINATION

Section 3.01 Term. This Interconnection Agreement shall become effective on the first day of the first month after being executed by the Parties, unless the Parties shall provide otherwise, or if filed unexecuted, upon the date specified by FERC ("Effective Date"). Unless terminated earlier in accordance with Section 3.02 below, this Interconnection Agreement shall remain in effect for an initial period of three (3) years from the Effective Date ("Initial Period"), and from year to year thereafter, but shall be subject to termination by either Party at the end of the Initial Period or on any anniversary date thereof by such Party giving written notice of its intention to terminate not less than twelve (12) months prior to the end of the Initial Period and/or anniversary date.

In the event either Party provides notice of termination of this Interconnection Agreement under this Section 3.01, and Interconnection Customer still requires interconnection service to serve loads on its distribution system, the Parties shall use commercially Reasonable Efforts to negotiate a replacement interconnection agreement. If Interconnection Customer no longer requires interconnection service, upon termination of this Interconnection Agreement, Transmission Provider may, at its sole discretion and at Interconnection Customer's expense, permanently disconnect or remove the Transmission Provider Interconnection Facilities, provided such expense is just and reasonable and not unduly discriminatory.

Section 3.02 Early Termination. Notwithstanding the term specified in Section 3.01, this Interconnection Agreement may be terminated early in the following circumstances: (a) by mutual agreement among the Parties; or (b) by either Party in the event of any material breach of this Interconnection Agreement by the other Party, provided, such termination shall be subject to FERC approval as set forth in Section 15.03 of this Interconnection Agreement.

The Parties shall use commercially Reasonable Efforts to mitigate the costs, damages and charges arising out of an early termination under this Section 3.02. In the event of a Dispute regarding the early termination fee, either Party may request dispute resolution pursuant to the procedures in Article XVI.

Section 3.03 Survival. Certain provisions of this Interconnection Agreement shall continue in effect after termination of this Interconnection Agreement to give full effect to its terms. Such provisions include, but are not necessarily limited to, those relating to early termination, Interconnection Customer's payment for installation, operation, and maintenance of the Interconnection Customer's Interconnection Facilities, and, as applicable, to provide for disconnection of the Interconnection Customer's Interconnection Facilities from Transmission Provider's electric system, final billings and adjustments related to the period prior to termination, a Party's right to terminate, indemnification, and payment of any money due and owing to either Party pursuant to this Interconnection Agreement.

ARTICLE IV
OWNERSHIP, CONSTRUCTION, OPERATION AND MAINTENANCE

Section 4.01 Summary Description. Appendix A, which is attached hereto and made a part hereof, provides a description of Interconnection Customer's electrical facilities and distribution system, including the Interconnection Customer Interconnection Facilities, Transmission Provider's electrical facilities and transmission system, including the Transmission Provider Interconnection Facilities, and the Point of Interconnection.

Section 4.02 Interconnection Customer Interconnection Facilities and System Protection Facilities. Interconnection Customer shall at Interconnection Customer's sole expense design, construct, operate, maintain and own in accordance with applicable laws, rules and regulations, the Tariff, and Good Utility Practice, the Interconnection Customer Interconnection Facilities as described in Appendix A. Further Interconnection Customer shall operate the Interconnection Customer Interconnection Facilities in a manner that protects the Transmission Provider's electric system and the Transmission Provider Interconnection Facilities from transients, faults, and other operating contingencies occurring at or caused by the Interconnection Customer.

Design and specification of System Protection Facilities including, protective relaying, alarming, fault recording, control, dVAR controller, metering, and related systems for substations, high voltage switch gear and transformers shall be subject to the Transmission Provider's review and approval, which approval shall not be unreasonably withheld or delayed. All System Protection Facilities must be in compliance with applicable laws, rules and regulations, Good Utility Practice and the requirements set forth in this Interconnection Agreement.

Interconnection Customer may be required to install, operate and maintain facilities and equipment required for Transmission Provider to comply with applicable frequency-based, voltage-based and manual load shedding obligations established by Reliability Standards or the Balancing Area Operator. Transmission Provider shall require Interconnection Customer to install such facilities or equipment only to the extent it imposes comparable obligations on Transmission Provider's native load customers.

Section 4.03 Transmission Provider Interconnection Facilities. Transmission Provider shall design, construct, operate, maintain, and own in accordance with applicable laws, rules and regulations, the Tariff, Good Utility Practice and the Interconnection Guidelines, the Transmission Provider Interconnection Facilities shown on Appendix A, and shall operate such facilities in a manner that protects the Interconnection Customer's electric system, including the Interconnection Customer Interconnection Facilities, from transients, faults, and other operating contingencies. The costs associated with Transmission Provider's Interconnection Facilities required to provide service to Interconnection Customer may be allocated to Interconnection Customer in accordance with Attachment U-1 to the Tariff.

Transmission Provider represents that to the best of its knowledge, the Interconnection Facilities, as of the Effective Date and described in Appendix A, are sufficient to permit interconnection of the Interconnection Customer Interconnection Facilities with the Transmission Provider Interconnection Facilities without additional equipment and in accordance with applicable Tariff interconnection requirements. Further Transmission Provider will support the design and adequacy of the Interconnection Facilities as described in Appendix A before any regulatory body having approval authority over the Interconnection Facilities.

Section 4.04 Network Upgrades. Transmission Provider shall plan, design, procure, construct, own, operate and maintain any Network Upgrades determined to be needed by Transmission Provider in accordance with Good Utility Practice, the Tariff and this Interconnection Agreement. The costs associated with Network Upgrades required to provide service to Interconnection Customer may be allocated to Interconnection Customer in accordance with Attachment U-1 to the Tariff.

Section 4.05 Modifications to Interconnection Facilities.

(a) Either Party may undertake modifications to its respective Interconnection Facilities which shall be designed, constructed and operated in accordance with this Interconnection Agreement and Good Utility Practice; provided however, if (1) Interconnection Customer proposes (i) to make any change or modification to the configuration or operation of the Interconnection Customer Interconnection Facilities which may impact Transmission

Provider's Transmission System, including the Transmission Provider Interconnection Facilities, (ii) to add a new Point of Interconnection, or (iii) to eliminate a Point of Interconnection (except when this Interconnection Agreement is terminated); or (2) Transmission Provider proposes to make any change or modification to the configuration or operation of the Transmission Provider Interconnection Facilities which may impact the Interconnection Customer Interconnection Facilities, (i) the Party proposing the change shall provide sufficient notice and information regarding such modification so that the other Party may evaluate the potential impact of such modification prior to the commencement of any work, and (ii) the Parties shall negotiate, in good faith, an amendment to this Interconnection Agreement as may be necessary to address the proposed change.

(1) Information provided under Section 4.05(a) may be designated by a Party to be Confidential Information hereunder, including, but not be limited to, information concerning the timing of such modification and how such modifications are expected to impact the other Party's system. Unless a shorter period of time is appropriate for a Party to respond to an Emergency, or comply with Reliability Standards or Applicable Law, the Party desiring to perform such work shall provide the relevant drawings, plans and specifications to the other Party at least ninety (90) days in advance of the commencement of the work or such shorter period upon which the Parties may agree, which agreement shall not unreasonably be withheld, conditioned or delayed.

(2) In the event the Parties are unable to agree to appropriate amendments or modifications to this Interconnection Agreement pursuant to Section 4.05(a), the Transmission Provider will unilaterally file, on a timely basis, with FERC an amendment to this Interconnection Agreement.

(3) The Parties' agreement to add a new Point of Interconnection shall be documented pursuant to Appendix C and Appendix E. The Parties' agreement to modify or remove a Point of Interconnection shall be documented pursuant to Appendix D and Appendix E; provided however, such documentation for removal of a Point of Interconnection is not necessary when this Interconnection Agreement is terminated pursuant to Section 3.02 or Article XV.

(b) To the extent Interconnection Customer is the Party modifying its interconnection facilities, Interconnection Customer shall be responsible for the costs of any additions, modifications or replacements that may be necessary to maintain or upgrade the Interconnection Customer Interconnection Facilities consistent with applicable laws, rules and regulations, the Tariff, Good Utility Practice, and the Interconnection Guidelines. Interconnection Customer shall own any modifications to the Interconnection Customer Interconnection Facilities.

(c) In the event the Transmission Provider designs and constructs new or additional Transmission Provider Interconnection Facilities or upgrades, improvements or other modifications to existing Transmission Provider Interconnection Facilities that result in those facilities qualifying as Network Upgrades (such facilities shall be treated as Network Upgrades for purposes of cost assignment), then Interconnection Customer shall not be responsible for the cost of such facilities or modifications.

Section 4.06 Ownership of Transmission Provider Interconnection Facilities and Network Upgrades. As a general rule, Transmission Provider shall own, design, construct, operate and maintain the Transmission Provider Interconnection Facilities and Network Upgrades, including facilities that are the subject of Sections 4.03 through 4.07. The Parties acknowledge and agree that there may be circumstances where alternative ownership arrangements for such facilities (*e.g.*, ownership by the Interconnection Customer) may be warranted if mutually agreed and in accordance with Good Utility Practice, just and reasonable, and not unduly discriminatory or preferential. To determine the appropriateness of using an alternative ownership arrangement, the Parties may consider factors such as: (i) state and federal legal requirements, including

applicable rights of first refusal; (ii) achieving the lowest reasonable cost; (iii) the effect of tax liabilities and payment of such liabilities; (iv) the relationship of the Transmission Provider Interconnection Facilities and/or Network Upgrades to other facilities owned by the Transmission Provider or Interconnection Customer; (v) the ability of the Transmission Provider or Interconnection Customer to own, operate and maintain the Transmission Provider Interconnection Facilities and/or Network Upgrades in accordance with Applicable Law and Reliability Standards; (vi) the purpose of the Transmission Provider Interconnection Facilities and/or Network Upgrades with consideration to who will benefit from such facilities; and (vii) whether the Party possesses adequate insurance to hold harmless the other Party and any third party from any claim, penalty, damage, liability or injury associated with such facilities. Should the Parties disagree on entering into an alternative ownership arrangement, and/or the terms and conditions of the alternative ownership arrangement, either Party shall have the right to unilaterally make applications to FERC under the Federal Power Act to seek resolution of such disagreement.

Alternative ownership and other arrangements may be provided for in the Interconnection Agreement or Appendix C or Appendix D supplemental agreement. Nothing herein shall waive Parties' rights or entitlements under Applicable Law.

Section 4.07 Construction. The Parties agree construction-related activities shall not commence until (1) the conditions set forth in Section 4.05 and/or Attachment U-1 have been satisfied, (2) all necessary federal, state, local and regulatory permits, permissions or approvals have been obtained, and (3) the Parties have agreed to a final construction schedule.

Section 4.08 Reliability Standards. Interconnection Customer shall be responsible for compliance with all Reliability Standards applicable to Interconnection Customer's electrical system; and Transmission Provider shall be responsible for compliance with all Reliability Standards applicable to its transmission system. Each Party shall be responsible for the costs of compliance with such Reliability Standards for their respective facilities and systems, including (a) costs associated with modifying their respective facilities or systems to comply with changes in such Reliability Standards; and (b) any financial penalties for non-compliance. The Parties agree to share data or documentation as may be required to demonstrate compliance with Reliability Standards where an individual Party has possession of data or documentation necessary for the other Party to demonstrate compliance.

Section 4.09 Interconnection Guidelines. The Interconnection Guidelines provide additional and more detailed standards for designing, testing, studying, constructing, operating, maintaining and interconnecting at the Point of Interconnection. Transmission Provider shall develop or promulgate the Interconnection Guidelines, including any updates, changes or modifications thereto, in accordance with Good Utility Practice. The Interconnection Guidelines include, among other things, power factor requirements, supervisory control and data acquisition ("SCADA") equipment requirements, and metering requirements.

Interconnection Customer will comply with the Interconnection Guidelines, as appropriate, for (i) any new point(s) of interconnection requested by Interconnection Customer on or after the Effective Date; (ii) any existing point(s) of interconnection materially modified after the Effective Date; and (iii) if the MISO market registration is changed; provided, however, Interconnection Customer is not required to comply with the Interconnection Guidelines for any Point(s) of Interconnection established pursuant to a prior interconnection agreement among the Parties, where no material modification was needed to the Point of Interconnection as a result of entering into this Agreement. After consultation with Interconnection Customer pursuant to Section 1.03(d), Transmission Provider will determine if there has been a material modification and such determination shall be done so in accordance with Good Utility Practice, and on a comparable, non-discriminatory basis Except when Interconnection Customer is excused from complying with the Interconnection Guidelines, failure by Transmission

Provider or Interconnection Customer to fulfill its obligations under the Interconnection Guidelines may be a material breach of this Interconnection Agreement.

Should a conflict develop between the Interconnection Guidelines and FERC rules, the Tariff or applicable Reliability Standards, the Parties agree to abide by the FERC rules, Tariff or Reliability Standards until Transmission Provider modifies the Interconnection Guidelines to remove such conflict. The Parties shall use the Dispute Resolution procedures set forth in Article XVI to resolve any disagreements regarding the interpretation, application or implementation of the Interconnection Guidelines.

Section 4.10 Power Factor. Unless prevented by circumstances beyond Interconnection Customer's control, including Forced Outages, Interconnection Customer shall have sufficient power factor control equipment (such as capacitors) installed to maintain at minimum a 95-percent lagging or leading power factor at the Point of Interconnection for those loads greater than 1 MW. Interconnection Customer shall maintain the aforesaid requirement during peak load periods and avoid leading power factor during light load conditions. Over time, it is the intention of the Parties that Interconnection Customer and Transmission Provider's load serving function will improve their respective power factor to a 98-percent lagging to leading power factor for those aggregated loads greater than 5 MWs. The power factor will be determined based on the MWh and MVARh flows during the monthly peak hour interval measured at each point of metering as follows: Power Factor = MWh/sqrt(MWh^2 + MVARh^2). With mutual agreement, reactive power support may be considered at an adjacent point of interconnection provided the substation is in electrically close proximity, in which case, the MWh and MVARh flows for each transformer may be combined for the purposes of compliance with this Section 4.10.

In the event Interconnection Customer has an aggregated load of over 1 MW but does not have sufficient power factor control equipment (such as capacitors) installed, to maintain at a minimum a 95-percent lagging or leading power factor at the Point of Interconnection, Interconnection Customer within thirty (30) days after written notice from Transmission Provider of such deficiency shall correct the deficiency or provide Transmission Provider with a written commitment to correct the deficiency. In the event Interconnection Customer makes a written commitment to add power factor control equipment (such as capacitors), Interconnection Customer shall exert commercially reasonable efforts to expeditiously bring such equipment into service and to complete installation within one (1) year from the initial notice or within such other time established by mutual agreement between the Parties. If the additional capacitors are not installed within the allowed time and Transmission Provider installs or has installed power factor control equipment on the Transmission System, Transmission Provider may bill Interconnection Customer a facilities fee based upon Transmission Provider's capital installation cost of an equivalent amount of power factor control equipment.

Section 4.11 Meter Data Management. Interconnection Customer shall have the right to select any entity, including itself, to be the MDMA that provides meter data to MISO; provided, however, that such entity has the necessary and appropriate qualifications to be an MDMA and provide meter data to MISO. Should the Parties mutually agree that Transmission Provider shall serve as the MDMA for Interconnection Customer, the rate for MDMA services shall be as set forth in the Tariff.

Section 4.12 Access. Appropriate representatives of each Party shall at all reasonable times; including weekends and nights, and with three (3) business days prior notice, have access to the other Party's facilities, to take readings and to perform all inspections, maintenance, service, and operational reviews as may be appropriate or necessary to facilitate the performance of this Interconnection Agreement. While on the other Party's premises, each Party's representatives shall announce their presence and observe such safety precautions as may be required and shall conduct themselves in a manner that will not interfere with the other Party's operations.

Section 4.13 Right of Installation. Each Party will make available suitable space for installation by the other Party of necessary equipment, apparatus and devices required for the performance of this Interconnection Agreement.

Section 4.14 Right of Removal. Any and all equipment, apparatus and devices caused to be placed or installed by one Party on, or in, the premises of the other Party shall be and remain the property of the Party owning such equipment, apparatus and devices regardless of the mode or manner of annexation or attachment to the premises. All foundations for all equipment shall be removed completely from the premises or to a lesser degree if an agreement for the lesser degree is reached between the Parties at the time. Notwithstanding the forgoing, in lieu of removal, the Parties reserve the right to sell any and all equipment, apparatus and devices that are attached to the premises. Once the aforesaid equipment is removed, the Parties will update Appendix A to reflect the removal.

Section 4.15 Transfer of Control or Sale of Facilities. In any sale or transfer of control of the Interconnection Customer's Interconnection Facilities, Interconnection Customer shall as a condition of such sale or transfer require the acquiring party or transferee with respect to the transferred facilities either to assume the obligations of Interconnection Customer with respect to this Interconnection Agreement or to enter into an agreement with Transmission Provider imposing on the acquiring party or transferee the same obligations applicable to Interconnection Customer pursuant to this Section 4.15.

ARTICLE V
OUTAGES AND COORDINATION

Section 5.01 Disconnection.

(a) Except when there is an Emergency, Forced Outage, Force Majeure and/or to comply with Applicable Law, including Reliability Standards, the Parties shall reasonably consult each other prior to disconnecting facilities.

(b) If at any time, the Transmission Provider observes any protective equipment which appears to have been changed other than pursuant to Section 4.05 and/or Attachment U-1, or failed, Transmission Provider shall have the right, if Transmission Provider determines that such change may have a material adverse impact on the safety or reliability of Transmission Provider's electric system consistent with Good Utility Practice, to disconnect Interconnection Customer's electric system from Transmission Provider's electric system, provided Transmission Provider first provides commercially reasonable notice to Interconnection Customer. Transmission Provider may require, at Interconnection Customer's expense (subject to Attachment U-1), a new calibration and activation test of Interconnection Customer's protective equipment after such equipment has been corrected or repaired.

Section 5.02 Outages. In accordance with Good Utility Practice, each Party may, in close cooperation with the other, remove from service its system elements that may impact the other Party's system as necessary to perform maintenance or testing or to replace installed equipment. Absent the existence of an Emergency, the Party scheduling a removal of a system element from service will use good-faith efforts to schedule such removal on a date mutually acceptable to both Parties, in accordance with Good Utility Practice.

In the event of a Forced Outage of a system element of the Interconnection Customer's electric system adversely affecting the Transmission Provider's facilities or electric system, Interconnection Customer will use Good Utility Practice to promptly restore that system element to service. In the event of a Forced Outage of a system element of the Transmission Provider's electric system adversely affecting the

Interconnection Customer's facilities or electric system, the Transmission Provider will use Good Utility Practice to promptly restore that system element to service.

In the event of a Planned Outage of a system element of Interconnection Customer's electric system adversely affecting Transmission Provider's facilities or electric system, Interconnection Customer will act in accordance with Good Utility Practice to promptly restore that system element to service in accordance with its schedule for the work that necessitated the planned outage. In the event of a Planned Outage of a system element of the Transmission Provider's electric system adversely affecting Interconnection Customer's facilities or electric system, Transmission Provider will act in accordance with Good Utility Practice to promptly restore that system element to service in accordance with its schedule for the work that necessitated the planned outage.

Section 5.03 Outage Reporting. The Parties shall comply with all current Transmission Provider, and MISO reporting requirements, as they may be revised from time to time, and as they apply to the Interconnection Customer or Transmission Provider. When a Forced Outage occurs that affects the Interconnection Customer Interconnection Facilities or impacts Interconnection Customer's electrical system such that there is an adverse impact to the Point of Interconnection, Interconnection Customer shall notify the NSP Control Center of the existence, nature, and expected duration of the Forced Outage as soon as practical, but in no event later than one (1) hour after the Forced Outage occurs. Interconnection Customer shall immediately inform the NSP Control Center of changes in the expected duration of the Forced Outage unless relieved of this obligation by the NSP Control Center for the duration of each Forced Outage. When a Forced Outage occurs that affects the Transmission Provider Interconnection Facilities or impacts Transmission Provider's transmission system such that there is an adverse impact to the Point of Interconnection, Transmission Provider shall notify Interconnection Customer of the existence, nature, and expected duration of the Forced Outage as soon as practical.

Section 5.04 Switching and Tagging Rules. The Parties shall abide by their respective switching and tagging rules for obtaining clearances for work or for switching operations on equipment. Transmission Provider shall notify Interconnection Customer of Transmission Provider's switching and tagging rules, and provide periodic updates of such rules as they may change from time to time. Interconnection Customer shall establish switching and tagging rules for Interconnection Customer Interconnection Facilities, and shall provide such rules to the Transmission Provider.

Section 5.05 Coordination. If a Party's interconnection facilities are subject to MISO's functional control, the Parties will coordinate with the applicable functional directives from MISO. In all other circumstances:

(a) Electrical system operation shall be coordinated between Interconnection Customer and Transmission Provider, including the coordination of equipment outages, voltage levels, real and reactive power flow monitoring, and switching operations, which affect the Balancing Area or LBA, as required by the Tariff and this Interconnection Agreement.

(b) If either Interconnection Customer or Transmission Provider operations are causing a condition on the interconnected electrical network where line loadings, equipment loadings, voltage levels or reactive flow significantly deviate from normal operating limits or can be expected to exceed emergency limits following a contingency, and reliability of the bulk power supply is threatened, the LBA, or Transmission Provider shall take immediate steps and make Reasonable Efforts to relieve, correct or control the condition. These steps include notifying other affected electric utility systems and MISO, as applicable, adjusting generation, changing schedules between Balancing Areas, initiating load relief measures, and taking such other reasonable action as may be required. Electrical equipment is to be operated within its normal rating established by the owning Party except for temporary conditions after a contingency has occurred.

(c) If either Interconnection Customer or Transmission Provider changes the normal operation of its system at a Point of Interconnection, the Parties shall consider any resulting benefits or adverse impacts to the reliability or transfer capability of the interconnected network for purposes of determining any applicable adjustments to the Parties' respective system usage rights and responsibilities.

(d) The Parties shall cooperate to supply, as applicable, MISO required information, including but not limited to, calculation of available flowgate or transmission capacity determination and for security constrained economic dispatching purposes.

(e) Each Party shall notify the other as soon as practicable whenever:

(1) Problems with a Point of Interconnection are detected that could result in mis-operation of interconnection protection or other interconnection equipment;

(2) The interconnection is opened by protective relay action;

(3) Interconnection equipment problems occur and result in an outage to a portion of Transmission Provider's electric system;

(4) A Party intends to initiate switching to close the interconnection; or,

(5) A Party intends to initiate switching to open the interconnection.

Section 5.06 Emergency. In the event of an Emergency, the Party becoming aware of the Emergency may, in accordance with Good Utility Practice and using its reasonable judgment, take such action as is reasonable and necessary to prevent, avoid, or mitigate injury, danger, and loss.

(a) In the event Interconnection Customer has identified an Emergency involving the Transmission Provider Interconnection Facilities, Interconnection Customer shall obtain the consent of Transmission Provider personnel prior to manually performing any switching operations unless immediate action is essential to protecting the safety of individuals or against extreme damage to property.

(b) Transmission Provider may, consistent with Good Utility Practice, take whatever actions or inactions the Transmission Provider deems necessary during an Emergency in order to: (1) preserve public health and safety; (2) preserve the reliability of the Transmission Provider's electric system, including the Transmission Provider Interconnection Facilities; (3) limit or prevent damage; and (4) expedite restoration of service. Transmission Provider shall use Reasonable Efforts to minimize the effect of such actions or inactions on the Interconnection Customer Interconnection Facilities.

(c) Interconnection Customer may, consistent with Good Utility Practice, take whatever actions or inactions with regard to the Interconnection Customer Interconnection Facilities Interconnection Customer deems necessary during an Emergency in order to: (1) preserve public health and safety; (2) preserve the reliability of the Interconnection Customer Interconnection Facilities; (3) limit or prevent damage; and (4) expedite restoration of service. Interconnection Customer shall use Reasonable Efforts to minimize the effect of such actions or inactions on Transmission Provider's electric system.

(d) Transmission Provider shall provide Interconnection Customer with prompt oral or electronic notification under the circumstances of an Emergency that may reasonably be expected to affect Interconnection Customer's operations, to the extent the Transmission Provider is aware of the Emergency. Interconnection Customer shall provide the Transmission Provider with prompt oral or electronic notification under the circumstances of an Emergency which may reasonably be expected to affect the Transmission Provider's electric system, to the extent Interconnection Customer is aware of the Emergency. To the extent the Party becoming aware of an Emergency is aware of the facts of the Emergency, such oral or electronic notification shall describe the Emergency, the extent of the damage or deficiency, its anticipated duration, and the corrective action taken and/or to be taken.

(e) To the extent a system Emergency exists on Transmission Provider transmission system, and Transmission Provider, Balancing Area Operator, or Reliability Coordinator determines it is necessary for the Transmission Provider and Interconnection Customer to shed load, the Parties shall shed load in accordance with the Tariff.

ARTICLE VI
SAFETY

Section 6.01 Safety Standards. The Parties agree that all work performed under this Interconnection Agreement shall be performed in accordance with all applicable laws, regulations, rules, standards, practices and procedures pertaining to the safety of persons or property. To the extent a Party performs work on the other Party's premises, the Party performing work shall also abide by the safety, or other access rules applicable to those premises.

Each Party shall be solely responsible for the safety and supervision of its own employees, agents, representatives, and contractors.

ARTICLE VII
ENVIRONMENTAL CONSIDERATIONS

Section 7.01 Environmental Considerations. Each Party will remain responsible for compliance with any and all environmental laws applicable to its own respective property, facilities, and operations. Each Party shall promptly notify the other Party upon discovering any release of any hazardous substance by it on the property or facilities of the other Party, or which may migrate to, or adversely impact the property, facilities or operations of, the other Party and shall promptly furnish to the other Party copies of any reports filed with any governmental agencies addressing such events.

The Party responsible for the release of any hazardous substance on the property or facilities of the other Party, or which may migrate to, or adversely impact the property, facilities or operations of, the other Party shall be responsible for the reasonable cost of performing any and all remediation or abatement activity and submitting all reports or filings required by environmental laws. Advance written notification (except in emergency situations, in which verbal, followed by written notification, shall be provided as soon as practicable) shall be provided by any Party performing any remediation or abatement activity on the property or facilities of the other Party, or which may adversely impact the property, facilities, or operations of, the other Party. Except in an Emergency, such remediation or abatement activity shall be performed only with the consent of the Party owning the affected property or facilities. The Parties agree to coordinate, to the extent necessary, the preparation of site plans, reports or filings required by law or regulation.

ARTICLE VIII
FORCE MAJEURE

Section 8.01 Effect of Declaring Force Majeure. Except for the obligation to make any payments under this Interconnection Agreement, neither Party shall be considered to be in default or breach of this Interconnection Agreement or liable in damages or otherwise responsible to the other Party for any delay in or failure to carry out any of its obligations under this Interconnection Agreement if, and only to the extent that, the Party is unable to perform or is prevented from performing by an event of Force Majeure. Notwithstanding the foregoing sentence, neither Party may claim Force Majeure for any delay or failure to perform or carry out any provision of this Interconnection Agreement to the extent that such Party has been negligent or engaged in intentional misconduct and such negligence or intentional misconduct substantially and directly caused that Party's delay or failure to perform or carry out its duties and obligations under this Interconnection Agreement.

Section 8.02 Procedures for Declaring Force Majeure. A Party claiming Force Majeure must:

(a) Give written notice to the other Party of the occurrence of a Force Majeure as soon as practicable;

(b) Use Reasonable Efforts to resume performance or the provision of service hereunder as soon as practicable;

(c) Take all commercially reasonable actions to correct or cure the Force Majeure;

(d) Exercise all Reasonable Efforts to mitigate or limit damages to the other Party; except that neither party shall be required to settle any strike, walkout, lockout or other labor dispute on terms which, in the sole judgment of the Party involved in the dispute, are contrary to its interest; and

(e) Provide written notice to the non-declaring Party, as soon as practicable, of the cessation of the adverse effect of the Force Majeure on its ability to perform its obligations under this Interconnection Agreement.

ARTICLE IX
BILLING AND PAYMENT

Section 9.01 Billing Procedure. Transmission Provider shall bill Interconnection Customer for the actual costs incurred under this Interconnection Agreement consistent with the procedures set forth in Article 7 of the Tariff. Payment of an invoice shall not relieve the paying Party from any responsibilities or obligations it has under this Interconnection Agreement, nor shall such payment constitute a waiver of any claims arising hereunder.

Section 9.02 Interest on Unpaid Balances. Interest on any unpaid amounts that are past due (including amounts placed in escrow) shall be calculated in accordance with Article 7 of the Tariff.

Section 9.03 Billing Disputes. If all or part of any bill is disputed by a Party, that Party shall promptly pay the amount that is not disputed, provide the other Party a reasonably detailed written explanation of the basis for the dispute, and request the commencement of dispute resolution pursuant to Article XVI of this Interconnection Agreement. When the amount in dispute is equal to or greater than one million dollars ($1,000,000), the disputed amount shall be paid into an independent escrow account pending resolution of the dispute, at which time the prevailing Party shall be entitled to receive the disputed amount, as finally determined to be payable, along with interest accrued at the Interest Rate through the date on which payment is made, within ten (10) business days of such resolution. If the amount in dispute is less than one million dollars ($1,000,000), the disputing Party may withhold the disputed amount or pay the disputed amount into an independent escrow account pending resolution of the dispute, at which time the prevailing Party shall be entitled to receive the disputed amount, as finally determined to be payable, along with interest accrued at the Interest Rate through the date on which payment is made, within ten (10) business days of such resolution. The Parties may elect, but are not required, to agree to Alternative Dispute Resolution, including arbitration. Neither Party shall be

responsible for the other Party's cost of collecting amounts due under this Interconnection Agreement, including attorney's fees.

ARTICLE X
NOTICES

Section 10.01 Notices. Any notice, demand, request, or communication required or authorized by this Interconnection Agreement shall be hand delivered or mailed by certified mail, return receipt requested, with postage prepaid, to Parties as set forth in Appendix B. In addition to the obligations set forth in the preceding sentence, a Party providing notice, demand, request or communication pursuant to this Section may also provide a courtesy copy of such notice, demand, request, or communication via electronic mail, or email. Any Party may update that portion of Appendix B that pertains to such Party's address by giving written notice to the other Parties of such change at any time.

ARTICLE XI
REGULATION AND MODIFICATION OF RATES

Section 11.01 Regulation. This Interconnection Agreement is subject to the jurisdiction of the FERC.

Section 11.02 Modification. Transmission Provider reserves its rights under Section 205 of the Federal Power Act to unilaterally make applications to FERC for modification of the rates, terms, conditions, classification of service, rule, or regulation for any service the Transmission Provider provides under this Interconnection Agreement and the attachments hereto over which FERC has jurisdiction. Interconnection Customer reserves its rights under Section 206 of the Federal Power Act to unilaterally make application to FERC for modification of the rates, terms, conditions, classification of service, rule, or regulation for any service provided under this Interconnection Agreement and the attachments hereto over which FERC has jurisdiction.

ARTICLE XII
ASSIGNMENT

Section 12.01 Successors and Assigns. This Interconnection Agreement shall be binding upon the respective Parties, their successors and permitted assigns, on and after the Effective Date hereof.

Section 12.02 Assignment Restrictions. This Interconnection Agreement may be assigned by either Party only with the written consent of the other; provided, however, that either Party may assign this Interconnection Agreement without the consent of the other Party to any Affiliate of the assigning Party with an equal or greater credit rating and with the legal authority and operational ability to satisfy the obligations of the assigning Party under this Interconnection Agreement; and provided further that Interconnection Customer shall have the right to assign this Interconnection Agreement, without the consent of Transmission Provider, for collateral security purposes to aid in providing financing, provided that Interconnection Customer promptly notifies Transmission Provider of any such assignment. Any financing arrangement entered into by Interconnection Customer pursuant to this Article XII will provide that prior to or upon the exercise of the secured party's, trustee's or mortgagee's assignment rights pursuant to said arrangement, the secured creditor, the trustee or mortgagee will notify Transmission Provider of the date and particulars of any such exercise of assignment right(s). Any attempted assignment that violates this Article XII is void and ineffective. Any assignment under this Interconnection Agreement shall not relieve a Party of its obligations, nor shall a Party's obligations be enlarged, in whole or in part, by reason thereof. Where requested, consent to assignment will not be unreasonably withheld, conditioned or delayed.

ARTICLE XIII
INSURANCE

Section 13.01 Applicability. If Interconnection Customer is a municipality, city, county, town, public authority or other political subdivision that qualifies for statutory limitations on liability under Applicable Law, Interconnection Customer shall procure and maintain, at its own expense, insurance coverages in accordance with the requirements set forth in Appendix F. In all other circumstances, Interconnection Customer shall comply with the requirements set forth in Section 13.02.

Section 13.02 Insurance. Each Party shall, at its own expense, maintain in force until this Interconnection Agreement is terminated and until released by the other Party, the following insurance coverages with insurers authorized to do business in the state where the Point of Interconnection is located:

(a) Employer's Liability and Workers' Compensation Insurance providing statutory benefits in accordance with the laws and regulations of the state in which the Point of Interconnection is located.

(b) Commercial General Liability Insurance including premises and operations, personal injury, broad form property damage, broad form blanket contractual liability coverage (including coverage for the contractual indemnification) products and completed operations coverage, coverage for explosion, collapse and underground hazards, independent contractors coverage, coverage for pollution to the extent normally available and punitive damages to the extent normally available and a cross liability endorsement, with minimum limits of one million dollars ($1,000,000) per occurrence/one million dollars ($1,000,000) aggregate combined single limit for personal injury, bodily injury, including death and property damage.

(c) Comprehensive Automobile Liability Insurance for coverage of owned and non-owned and hired vehicles, trailers or semi-trailers designed for travel on public roads, with a minimum, combined single limit of one million dollars ($1,000,000) per occurrence for bodily injury, including death, and property damage.

(d) Excess Public Liability Insurance over and above the Employers' Liability Commercial General Liability and Comprehensive Automobile Liability Insurance coverage, with a minimum combined single limit of ten million dollars ($10,000,000) per occurrence/ ten million dollars ($10,000,000) aggregate.

(e) The Commercial General Liability Insurance, Comprehensive Automobile Insurance and Excess Public Liability Insurance policies shall name the other Party, its parent, associated and Affiliate companies and their respective directors, officers, agents, servants and employees ("Other Party Group") as additional insured. All policies shall contain provisions whereby the insurers waive all rights of subrogation in accordance with the provisions of this Interconnection Agreement against the Other Party Group and provide thirty (30) calendar days advance written notice to the Other Party Group prior to the anniversary date of cancellation or any material change in coverage or condition.

(f) The Commercial General Liability Insurance, Comprehensive Automobile Liability Insurance and Excess Public Liability Insurance policies shall contain provisions that specify that the policies shall apply to such extent without consideration for other policies separately carried. Each Party shall be responsible for its respective deductibles or retentions.

(g) The Commercial General Liability Insurance, Comprehensive Automobile Liability Insurance and Excess Public Liability Insurance policies, if written on a Claims First Made Basis, shall be maintained in full force and effect for two (2) years after termination of this Interconnection Agreement, which coverage may be in the form of tail coverage or extended reporting period coverage if agreed by the Parties.

(h) The requirements contained herein as to the types and limits of all insurance to be maintained by the Parties are not intended to and shall not in any manner, limit or qualify the liabilities and obligations assumed by the Parties under this Interconnection Agreement.

(i) Within ten (10) days following execution of this Interconnection Agreement, and as soon as practicable after the end of each fiscal year or at the renewal of the insurance policy and in any event within ninety (90) days thereafter, each Party shall provide certification of all insurance required in this Interconnection Agreement, executed by each insurer or by an authorized representative of each insurer.

(j) Notwithstanding the foregoing, each Party may self-insure to meet the minimum insurance requirements of subsections (a)-(h) of this Section 13.01 to the extent the Party maintains a self-insurance program; provided that, such Party's senior secured debt is rated at investment grade or better by Standard & Poor's and that its self-insurance program meets the minimum insurance requirements set forth in subsections (a)-(h) of this Section 13.01. For any period of time that a Party's senior secured debt is unrated by Standard and Poor's, such Party shall comply with the insurance requirements set forth in subsections (a)–(i) of this Section 13.01. In the event that a Party is permitted to self-insure pursuant to this Article XIII, it shall notify the other Party that it meets the requirements to self-insure and that its self-insurance program meets the minimum insurance requirements in a manner consistent with that specified in this Section 13.01(j).

(k) The Parties agree to report to each other in writing as soon as practicable all accidents or occurrences resulting in injuries to any person, including death, and any property damage arising out of this Interconnection Agreement.

(l) In the event Interconnection Customer is a municipality or other governmental entity, Interconnection Customer will be subject to the insurance coverage obligations set forth in Appendix F in lieu of the insurance obligations set forth in this Section 13.02.

ARTICLE XIV
CONSEQUENTIAL DAMAGES, INDEMNITY AND RISK OF LOSS

Section 14.01 Waiver of Consequential Damages. In no event shall one Party, its governing board members, officers, employees or agents be liable to the other Party under this Interconnection Agreement from any cause howsoever arising in contract, tort or otherwise for any indirect, incidental, special, punitive, exemplary, or consequential damages, including but not limited to, loss of use, loss of revenue, loss of profit, and/or cost of replacement power, interest charges, cost of capital, claims of its customers to which service is made; provided, however, that damages for which a Party may be liable to the other Party under another agreement will not be considered to be special, indirect, incidental, punitive, exemplary or consequential damages hereunder.

Section 14.02 Indemnity. Each Party shall at all times indemnify, defend and hold harmless the other Party, its shareholders, members, partners, Affiliates, employees, consultants, representatives, agents, successors and permitted assigns ("Indemnified Party") from any and all liability, damages, losses, claims, including claims and actions relating to injury to or death of any person or damage to property, demand, suits, recoveries, costs and expenses, court costs, attorney fees, and all other obligations by or to third parties, arising out of or resulting from the other Party's ("Indemnifying Party") negligence, or action or inactions of its obligations under this Interconnection Agreement, except in cases of negligence, gross negligence or intentional wrongdoing by the Indemnified Party. Nothing in this Section 14.02 shall relieve the Transmission Provider or Interconnection Customer of any liability to the other for any breach of this Interconnection Agreement.

(a) If an Indemnified Party is entitled to indemnification under this Section 14.02 as a result of a claim by a third party, and the Indemnifying Party fails, after notice and reasonable opportunity to proceed, to assume the defense of such claim, the Indemnified Party may at the expense of the Indemnifying Party contest, settle or consent to the entry of any judgment with respect to, or pay in full, such claim.

(b) If an Indemnifying Party is obligated to indemnify and hold any Indemnified Party harmless under this Section 14.02, the amount owing to the Indemnified Party shall be the amount of such Indemnified Party's loss net of any insurance or other recovery.

(c) Promptly after receipt by an Indemnified Party of any claim or notice of the commencement of any action or administrative or legal proceeding or investigation as to which the indemnity provided in this Section 14.02 may apply, the Indemnified Party shall notify the Indemnifying Party of such fact. Any failure of or delay in such notification shall not affect the Indemnifying Party's obligation to indemnify the Indemnified Party unless such failure or delay is materially prejudicial to the Indemnifying Party.

(d) In the event Indemnifying Party is a municipality or other governmental entity, Indemnifying Party will be subject to the indemnification obligations set forth in Appendix F in lieu of the indemnification obligations set forth in this Section 14.02.

Section 14.03 Risk of Loss. Except under situations of negligence, gross negligence, or intentional wrong-doing by the other Party, each Party shall have the full risk of loss for its own property and material, and each Party shall (subject to Article XIII) obtain and maintain insurance coverage accordingly under its own insurance and risk management procedures. To the extent permitted by each Party's insurer, at no additional cost to that Party, each Party shall require its property insurer to waive the right of subrogation. Each Party shall have title and risk of loss for those materials or capital equipment purchased for its ownership by the other Party as an authorized agent under this Interconnection Agreement confirmed by written confirmation and approval of supplier, specifications, equipment warranty, delivery and installation arrangements (the principal being entitled to any sales tax exemptions). All such equipment and materials will be inspected by the purchasing agent Party upon delivery and damaged or nonconforming equipment or materials will be rejected and returned to the seller upon consultation and agreement with the Party for whom the equipment was purchased.

ARTICLE XV
DEFAULT AND TERMINATION

Section 15.01 Default by Interconnection Customer.

(a) In the event the Interconnection Customer fails, for any reason other than a billing dispute as described in Section 9.03, to make payment to Transmission Provider on or before the due date as described herein, and such failure of payment is not cured within thirty (30) calendar days after Transmission Provider notifies Interconnection Customer of such failure, a default by Interconnection Customer shall be deemed to exist.

In the event of an uncured default by Interconnection Customer for nonpayment, except when nonpayment is the subject of a billing dispute as provided in Section 9.03, Transmission Provider may initiate a proceeding with the FERC to terminate service but shall not terminate service until the FERC so approves any such request. In the event of a billing dispute between Transmission Provider and Interconnection Customer, Transmission Provider will continue to provide service under this Interconnection Agreement as long as the Interconnection Customer (1) continues to make all payments not in dispute, and (2) subjection to Section 9.03, pays into an independent escrow account the portion of the invoice in dispute, pending resolution of such dispute. If Interconnection Customer fails to meet these two requirements for continuation of

service, then Transmission Provider may provide notice to the Interconnection Customer of its intention to suspend service in accordance with the Tariff or FERC policy.

(b) Interconnection Customer shall also be in default if it materially breaches any other provision of this Interconnection Agreement, and fails to cure any such breach within thirty (30) days after written notice by Transmission Provider of the existence and nature of such alleged breach.

(c) If Interconnection Customer assigns its interests under this Interconnection Agreement to a bank, lender or other financial institution for purposes of obtaining financing ("Financing Party"), and Interconnection Customer notifies Transmission Provider of this assignment and the information necessary for Transmission Provider to contact Financing Party, then Transmission Provider shall also notify Financing Party of any breach or default by Interconnection Customer under this Interconnection Agreement at the same time as it notifies Interconnection Customer of such breach or default. If Financing Party elects to cure the breach or default, by payment or otherwise, then Transmission Provider agrees to accept such cure by Financing Party as if the same had been effected by Interconnection Customer.

Section 15.02 Default by Transmission Provider. Transmission Provider shall be considered in default if it fails to make any payment due to Interconnection Customer hereunder, or fails to cure any material breach, within thirty (30) days after written notice of nonpayment or material breach from Interconnection Customer.

Section 15.03 Termination for Default. Should a Party fail to cure a default within the applicable cure period, and the default is not contested pursuant to the dispute resolution process provided in Section 16.01 or other legal processes, the non-defaulting Party shall have the right to terminate this Interconnection Agreement subject to FERC approval and other defenses by giving written notice to the Party in default, and be relieved of any further obligation hereunder, and whether or not the non-defaulting Party terminates this Interconnection Agreement, to recover from the defaulting Party all amounts due hereunder, plus all other damages and remedies to which the non-defaulting Party is entitled subject to the limitations set forth in Article XIV of this Interconnection Agreement. The provisions of this Article XV shall survive termination of this Interconnection Agreement.

ARTICLE XVI
DISPUTE RESOLUTION

Section 16.01 Dispute Resolution Process. In the event the Parties are required by this Interconnection Agreement or mutually agree to try and resolve a dispute, the Parties shall first refer the dispute to designated senior representatives, with authority to bind their respective Party, for resolution on an informal basis as promptly as practicable. In the event the designated representatives are unable to resolve the dispute within thirty (30) days, or such other period as the Parties may mutually agree, such dispute may either be submitted to the alternative dispute resolution provisions set out in Article 12 of the Tariff, if agreed to by the Parties, or the aggrieved Party may initiate legal proceedings at the Commission or court of competent jurisdiction.

ARTICLE XVII
CONFIDENTIAL INFORMATION

Section 17.01 Furnishing of Information. It is recognized by the Parties that the successful operation of this Interconnection Agreement depends upon the cooperation by the Parties in the operation of their systems. As a part of such cooperation, subject to the limitations regarding disclosing confidential information provided in this Interconnection Agreement, each Party agrees that it will furnish to the other Party such data concerning its system as may be necessary to support the other Party's system reliability.

Section 17.02 Confidential Information.

(a) “Confidential Information" means (1) any confidential, proprietary or trade secret information of a plan, specification, pattern, procedure, design, device, drawing, list, concept, customer information, policy or compilation relating to the present or planned business of a Party, which is designated as Confidential Information by the Party supplying the information, whether conveyed orally, electronically, in writing, through inspection, or otherwise; or (2) any Critical Energy Infrastructure Information. Confidential Information which includes, without limitation, all information relating to a Party's technology, research and development, business affairs, and pricing, and any information supplied by a Party to another Party on a confidential basis prior to the execution of this Interconnection Agreement.

(b) Confidential Information shall not include information that the receiving Party can demonstrate: (1) is generally available to the public other than as a result of a disclosure by the receiving Party; (2) was in the lawful possession of the receiving Party on a non confidential basis before receiving it from the disclosing Party; (3) was supplied to the receiving Party without restriction by a third party, who, to the knowledge of the receiving Party, was under no obligation to the other Party to keep such information confidential; (4) was independently developed by the receiving Party without reference to Confidential Information of the disclosing Party; or (5) is, or becomes, publicly known, through no wrongful act or omission of the receiving Party or breach of this Interconnection Agreement.

Information designated as Confidential Information will no longer be deemed confidential if the Party that designated the information as Confidential Information notifies the other Parties that such information no longer is confidential.

(c) Information is Confidential Information only if it is clearly designated or marked in writing as confidential on the face of the document; or, if the information is conveyed orally or by inspection, the Party providing the information orally informs the receiving Party that the information is confidential. Each Party shall be responsible for clearly designating or marking information governed by FERC's Critical Energy Infrastructure Information rules and regulations.

Section 17.03 Protection of Confidential Information.

(a) No Party shall disclose any Confidential Information of the other Party obtained pursuant to or in connection with the performance of this Interconnection Agreement to any third party without the express written consent of the providing Party; provided, however, that any Party may produce Confidential Information in response to a subpoena, discovery request or other compulsory process issued by a judicial body or Governmental Authority upon reasonable notice to the providing Party that (a) a protective order from such jurisdictional judicial body or court has been issued relating to the Confidential Information; and (b) a binding nondisclosure agreement is in effect with a proposed recipient of any Critical Energy Infrastructure Information.

(b) The Parties shall use at least the same standard of care to protect Confidential Information they receive as they use to protect their own Confidential Information from unauthorized disclosure, publication or dissemination.

(c) Any Party may use Confidential Information solely: (1) to fulfill its obligations to the other Party, under this Interconnection Agreement; (2) to fulfill its regulatory requirements except to the extent that such information constitutes or has been designated Critical Energy Infrastructure Information; (3) in any proceeding or in any administrative agency or court of competent jurisdiction addressing any dispute arising under this Interconnection Agreement, subject either to a written confidentiality agreement with all Parties (including, if applicable, an arbitrator(s)) or to a protective order; or (4) as required by Applicable Law. As it pertains to (3) and (4), notwithstanding the absence of a protective order or waiver, a Party may disclose such Confidential Information which, in the opinion of its counsel, the Party is legally compelled to disclose. In the event that the receiving Party is legally requested or required (by oral questions, interrogatories, requests for information or documents, subpoena, civil investigative demand or similar process, or in the opinion of its counsel, by federal or state securities or other statutes, regulations or laws) to disclose any Confidential Information, the receiving Party shall, to the extent permitted under applicable law, promptly notify the disclosing Party of such request or requirement prior to disclosure, so that the disclosing Party may seek an appropriate protective order and/or waive compliance with the terms of this Interconnection Agreement and shall request confidential treatment of any such disclosure.

(d) The Parties agree that monetary damages by themselves may be inadequate to compensate a Party for the other Party's breach of its obligations under this Article. Each Party accordingly agrees that the other Parties are entitled to equitable relief, by way of injunction or otherwise, if it breaches or threatens to breach its obligations under this Article.

Section 17.04 Survival. The confidentiality obligations of this Article shall survive termination of this Interconnection Agreement for a period of two (2) years.

ARTICLE XVIII
MISCELLANEOUS

Section 18.01 Third Party Contracts. The Parties recognize that each has entered into and may in the future enter into contractual commitments with various third parties regarding benefits, use and operation of network transmission facilities it owns within the interconnected regional transmission network. Each Party hereby covenants that its respective contracts with third parties shall not interfere with its obligations to the other Party made under this Interconnection Agreement.

Section 18.02 No Residual Value. This Interconnection Agreement shall not be construed to provide any residual value to either Party or its successors or permitted assigns or any other party, for rights to, use of, or benefits from the other Party's system following expiration of this Interconnection Agreement.

Section 18.03 No Third Party Beneficiary. Unless otherwise specifically provided in this Interconnection Agreement, the Parties do not intend to create rights in or to grant remedies to any third Party as a beneficiary of this Interconnection Agreement or of any duty, covenant, obligation or undertaking established hereunder.

Section 18.04 Headings. Article headings and titles are included for the convenience of Parties and shall not be used to construe the meaning of any provision of this Interconnection Agreement.

Section 18.05 Governing Law. This Interconnection Agreement shall be interpreted and governed by the laws of the state in which the Point of Interconnection is located, or the laws of the United States of America, as applicable.

Section 18.06 Effect of MISO Membership. In the event, during the term hereof, Transmission Provider ceases to be a transmission owning member of a MISO or a successor, all terms and conditions with respect to MISO, or successor(s) herein shall remain in force until amended. Transmission Provider shall be responsible for filing with FERC any modifications to this Interconnection Agreement necessary as a result of such action.

Section 18.07 No Joint System. The Parties each own and operate separate interconnected electric systems, and no provision of the Interconnection Agreement shall be interpreted to mean or imply the Parties have established or intend to establish a jointly-owned electric system, a joint venture, trust, a partnership, or any other type of association.

Section 18.08 Relationship to MISO Tariff. Nothing contained herein shall modify, amend or revise the obligations of the Parties under the MISO Tariff.

Section 18.09 Amendment. Except as provided in Section 11.02, any amendment, alteration, variation, modification or waiver of the provisions of this Interconnection Agreement, other than revisions to the Appendices authorized by this Interconnection Agreement, shall be valid only after it has been reduced to writing and duly signed by both Parties, and if required, approved by the appropriate regulatory bodies.

Section 18.10 Conflicts. In the event any term of this Interconnection Agreement conflicts with the Tariff, the terms of this Interconnection Agreement shall control.

Section 18.11 Waiver. The failure of either Party to enforce or insist upon compliance with or strict performance of any of the terms or conditions of this Interconnection Agreement, or to take advantage of any of its rights thereunder, shall not constitute a waiver or relinquishment of any such terms, conditions, or rights, but the same shall be and remain at all times in full force and effect.

Section 18.12 Counterparts. This Interconnection Agreement may be executed in any number of counterparts, and each executed counterpart shall have the same force and effect as an original instrument.

Section 18.13 Severability. If any governmental authority or court of competent jurisdiction holds that any provision of this Interconnection Agreement is invalid, or if, as a result of a change in any Federal or State law or constitutional provision, or any rule or regulation promulgated pursuant thereto, any provision of this Interconnection Agreement is rendered invalid or results in the impossibility of performance thereof, the remainder of this Interconnection Agreement not affected thereby shall continue in full force and effect. In such an event, the Parties shall promptly renegotiate in good faith new provisions to restore this Interconnection Agreement as nearly as possible to its original intent and effect.

SIGNATURES

In Witness Whereof, the Parties have caused this Interconnection Agreement to be duly executed as of this ____ day of _____ 20__.

CITY OF ST. JAMES
A Minnesota municipal corporation

By *<u>/s/ LeAnn M. Nibbe</u>*

Name: <u>LeeAnn M. Nibbe</u>

Title: <u>City Clerk/Treasurer</u>

Date: <u>October 20, 2015</u>

NORTHERN STATES POWER COMPANY,
A Minnesota corporation, and
NORTHERN STATES POWER COMPANY,
A Wisconsin corporation

By: *<u>/s/</u>*

Name: <u>Ian R. Benson</u>

Title: <u>Director, Transmission Planning & Business Relations</u>

Date: <u>__10/30/2015_____</u>

Xcel Energy Services Inc.
Authorized Agent

APPENDIX A

IDENTIFICATION OF POINTS OF INTERCONNECTION AND FACILITIES

A-1: St. James Substation (TR1) - Point of Interconnection # 1 (POI # 1)
A-2: St. James Municipal East Substation (TR2) - Point of Interconnection # 2 (POI # 2)

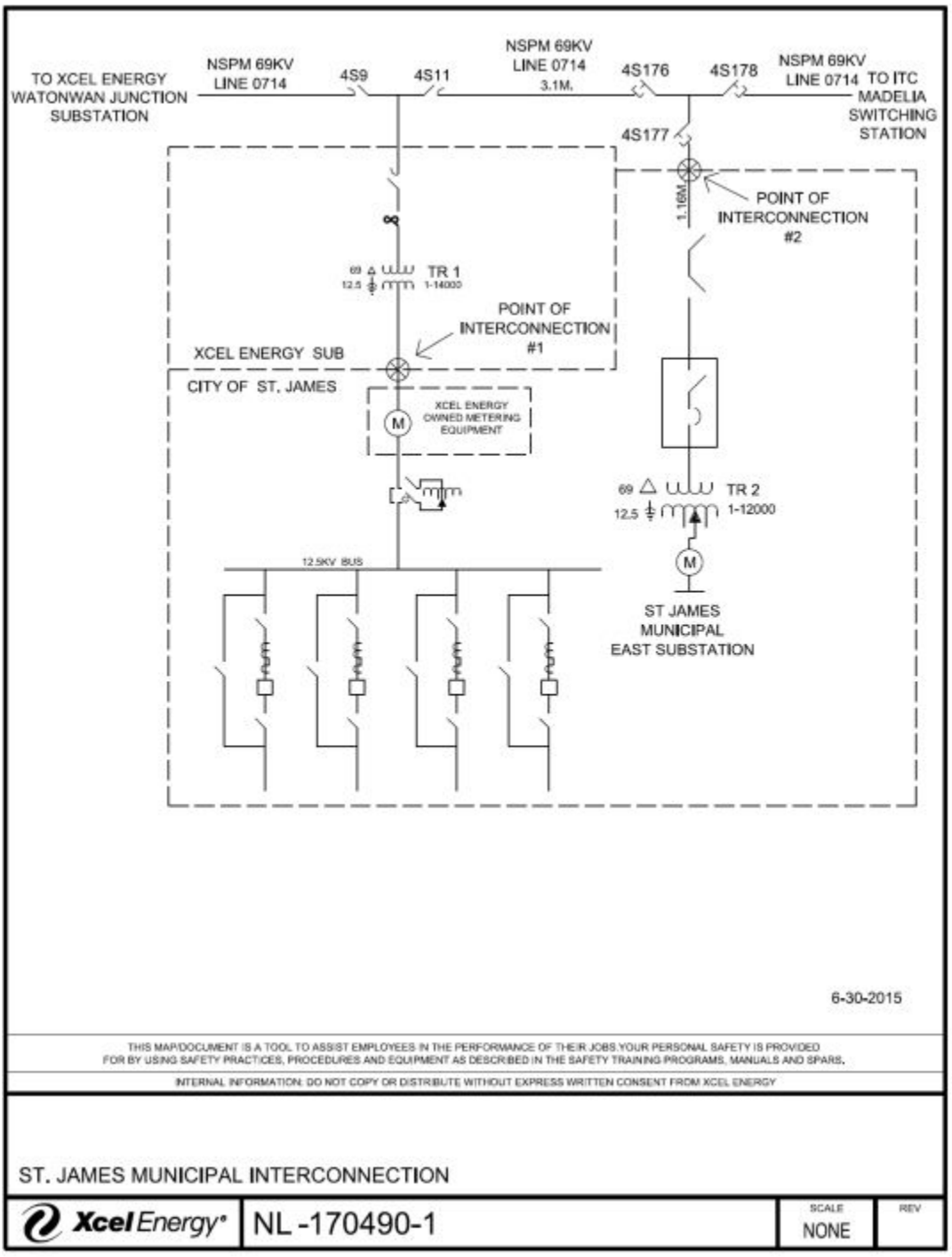

APPENDIX A-1

Point of Interconnection # 1 (POI # 1): St. James Municipal

This Point of Interconnection is located at the connecting hardware where NSPM's St. James Municipal Substation interconnects with Interconnection Customer's distribution system.

The legal description for the real property related to this Point of Interconnection is as follows: a point located about 1 mile north from the intersection of County Road 55 and Weston Ave. with a legal description as Section 14, Township 106 N. Range 32 W. in the City of St. James, Watonwan County, Minnesota.

The point of metering is located on the low side of Transformer #1 (TR1). The meter readings shall be compensated to account for transformer losses to the 69kV voltage. The compensation shall be done by multiplying the energy flows by 1.01, unless otherwise agreed. The meter and associated metering equipment shall be provided, owned and maintained by NSPM. Interconnection Customer shall provide and install a meter enclosure at a suitable location and provide and install conduit and supports for the metering transformers. The metering transformers provided by NSPM shall be installed by Interconnection Customer.

For MDMA purposes, Interconnection Customer or an entity designated by Interconnection Customer shall provide metered data to MISO based on data collected from NSPM's meters. Interconnection Customer shall provide notice to NSPM in writing of the name, business address and contact information for Interconnection Customer's designated MDMA provider.

The applicable Interconnection Provisions for Point of Interconnection # 1 are set forth in Appendix E-1.

APPENDIX A-2

Point of Interconnection # 2 (POI # 2): St. James Municipal East Substation

This Point of Interconnection is located at the connecting hardware where NSPM's 69kV transmission line # 0714, structure # 707 interconnects with Interconnection Customer's tap originating at Interconnection Customer's St. James Municipal East Substation.

The legal description for the real property related to this Point of Interconnection is as follows: a point located in the intersection of 330th Street and 733rd Avenue with a legal description as Section 6, Township 106 N. Range 31 W. in the City of St. James, Watonwan County, Minnesota.

The point of metering is located on the low side of Transformer #2 (TR2). The meter readings shall be compensated to account for transformer losses to the 69kV voltage. The compensation shall be done by multiplying the energy flows by 1.01, unless otherwise agreed. The meter and associated metering equipment shall be provided, owned and maintained by NSPM. Interconnection Customer shall provide and install a meter enclosure at a suitable location and provide and install conduit and supports for the metering transformers. The metering transformers provided by NSPM shall be installed by Interconnection Customer.

For MDMA purposes, Interconnection Customer or an entity designated by Interconnection Customer shall provide metered data to MISO based on data collected from NSPM's meters. Interconnection Customer shall provide notice to NSPM in writing of the name, business address and contact information for Interconnection Customer's designated MDMA provider.

The applicable Interconnection Provisions for Point of Interconnection # 2 are set forth in Appendix E2.

APPENDIX B

NOTICES

Any notice, demand, request, or communication required or authorized by this Interconnection Agreement shall be hand delivered or mailed by certified mail, return receipt requested, with postage prepaid, to Parties, and may also provide a courtesy copy of such notice, demand, request, or communication via electronic mail, or email, as follows:

For Customer:

City of St. James
Superintendent
124 Armstrong Blvd. S.
P.O. Box 70
St. James, MN 56081

For Transmission Provider:

Xcel Energy
Manager, Transmission Business Relations
414 Nicollet Mall, MP-8
Minneapolis, MN 55401

For Invoices:

Clerk
City of St. James
P.O. Box 70
124 Armstrong Blvd. S.
St. James, MN 56081

Team Lead, Transmission Accounting
Xcel Energy Services, Inc.
1800 Larimer, 12th floor
Denver, CO 80202
303-571-2782

For Operational Matters:

Foreman
City of St. James
507-375-1226

Transmission MN Control Center
Northern States Power Company
612-321-7431

This designation and titles of the person to be notified or the address of such person may be changed at any time by written notice.

APPENDIX C

Template for Adding a New Point of Interconnection

The Parties understand that it may be necessary to add a Point of Interconnection. Should the Parties agree to add a Point of Interconnection, Interconnection Customer and Transmission Provider shall use the following form or another that is substantially similar to it for purposes of documenting their mutual agreement and to update the Point of Interconnection described in Appendix A to this Interconnection Agreement:

Facilities are located in_____

Included hereafter are the Interconnection Provisions and Interconnection Diagram for this Point of Interconnection and a completed Appendix E documenting the respective responsibilities of the Parties.

The costs of such Facilities shall be borne by Interconnection Customer or Transmission Provider as provided in Attachment U-1 to the Tariff.

In Witness Whereof, the Parties have confirmed these Interconnection Provisions to become part of Transmission to Load Interconnection Agreement between the Parties dated _____ __, 20__, and to be duly executed as of this ____ day of _____, 20___.

CITY OF ST. JAMES
A Minnesota municipal corporation

By: _____

Name: _____

Title: _____

Date: _____

NORTHERN STATES POWER COMPANY
A Minnesota corporation and
NORTHERN STATES POWER COMPANY,
A Wisconsin corporation

By: _____

Name: _____

Title: _____

Date: _____

By Xcel Energy Services Inc.
Authorized Agent

APPENDIX D

Template for Modifying or Removing
Point of Interconnection

The Parties understand that it may be necessary to modify or remove Point of Interconnection. Should the Parties agree to modify or remove, Interconnection Customer and Transmission Provider shall use the following form or another that is substantially similar to it for purposes of documenting their mutual agreement and to update the Point of Interconnection described in Appendix A to this Interconnection Agreement:

Facilities are located in_____

Included hereafter are the Interconnection Provisions and Interconnection Diagram for this Point of Interconnection and a completed Appendix E documenting the respective responsibilities of the Parties.

The costs of such Facilities shall be borne by Interconnection Customer or Transmission Provider as provided in Attachment U-1 to the Tariff.

In Witness Whereof, the Parties have confirmed these Interconnection Provisions to become part of Transmission to Load Interconnection Agreement between the Parties dated _____ __, 20__, and to be duly executed as of this ____ day of _____, 20___.

CITY OF ST. JAMES
A Minnesota municipal corporation

By: _____

Name: _____

Title: _____

Date: _____

NORTHERN STATES POWER COMPANY
A Minnesota corporation and
NORTHERN STATES POWER COMPANY,
A Wisconsin corporation

By: _____

Name: _____

Title: _____

Date: _____

By Xcel Energy Services Inc.
Authorized Agent

APPENDIX E-1

INTERCONNECTION PROVISIONS
ST. JAMES MUNICIPAL DISTRIBUTION SUBSTATION POI # 1 AND
RELATED TRANSMISSION SYSTEM MODIFICATIONS
OWNERSHIP, OPERATION AND MAINTENANCE PROVISIONS

Description	Owner	Operator	Maintenance Responsibility	Financial Responsibility For Construction	Financial Responsibility For O&M	Financial Responsibility For Replacement	Responsibility to Accomplish Engineering Design and Construction
SUBSTATION							
St. James Municipal Substation - 69kV to 12.5kV (TR1).	NSPM	NSPM	NSPM	NSPM	NSPM	NSPM	NSPM
St. James Municipal 12.5kV distribution feeders.	IC	IC	IC	IC	IC	IC	IC
TRANSMISSION							
Transmission line # W0714 – 69kV	NSPM	NSPM	NSPM	NSPM	NSPM	NSPM	NSPM
One (1) 69kV two-way switch # 4S9, 4S11 mounted on structure # 0714-760A.	NSPM	NSPM	NSPM	NSPM	NSPM	NSPM	NSPM
METERING & TELEMETRY							
Metering equipment, instrument transformers and ancillary equipment (meter wiring & meter socket)	IC	IC	IC	IC	IC	IC	IC
Meter for POI # 1 (TR1).	NSPM	NSPM	NSPM	NSPM	IC	IC	NSPM

NSPM – Northern States Power Company Minnesota, IC – Interconnection Customer

APPENDIX E-2

INTERCONNECTION PROVISIONS
ST. JAMES MUNICIPAL EAST DISTRIBUTION SUBSTATION POI # 2 AND
RELATED TRANSMISSION SYSTEM MODIFICATIONS
OWNERSHIP, OPERATION AND MAINTENANCE PROVISIONS

Description	Owner	Operator	Maintenance Responsibility	Financial Responsibility For Construction	Financial Responsibility For O&M	Financial Responsibility For Replacement	Responsibility to Accomplish Engineering Design and Construction
SUBSTATION							
St. James Municipal East Substation 69kV to 12.5kV, approx. 1.6 miles south of POI #1 (TR2).	IC	IC	IC	IC	IC	IC	IC
TRANSMISSION							
Transmission line # W0714 – 69kV	NSPM	NSPM	NSPM	NSPM	NSPM	NSPM	NSPM
One (1) 69kV manually operated three-way switch # 4S176, 4S177 and 4S178 with load break capabilities mounted on structure # 0714-707.	NSPM	NSPM	NSPM	NSPM	NSPM	NSPM	NSPM
One 69kV tap line of 3-phase wires and shield wires from NSPM's transmission line #0714 to IC's substation including tap back guys, wire, ground anchors and hardware required to support the tap.	IC	IC	IC	IC	IC	IC	IC
METERING & TELEMETRY							
Metering equipment, instrument transformers and ancillary equipment (meter wiring & meter socket)	IC	IC	IC	IC	IC	IC	IC
Meter for POI # 2 (TR2).	NSPM	NSPM	NSPM	NSPM	IC	IC	NSPM

NSPM – Northern States Power Company Minnesota, IC – Interconnection Customer

APPENDIX F

INSURANCE AND INDEMNIFICATION OBLIGATIONS FOR A MINNESOTA MUNICIPALITY

A. Insurance Coverages. If Interconnection Customer is subject to Minn. Stat. § 466.04, as amended from time to time, or any successor statute, Interconnection Customer shall, at its own expense, maintain in force until this Interconnection Agreement is terminated or until released by Transmission Provider, insurance coverages equal to the maximum limitation on liabilities set forth in Minn. Stat. § 466.04.

Interconnection Customer shall use its best efforts to ensure that Transmission Provider and its parent, associated and Affiliate companies and their respective directors, officers, agents, servants and employees shall be named as an additional insured under Interconnection Customer's Commercial General Liability Insurance policy, at Transmission Provider's expense, if any, for all incremental costs. The additional insured coverage for Transmission Provider shall be up to $500,000 per claimant, and $1,500,000 for all claims arising out of a single occurrence (or other amounts, if higher, consistent with the Interconnection Customer's policy and state law), without diminishing Interconnection Customer's ability to recover its own liabilities under the policy.

In the event that Interconnection Customer cannot obtain such insurance coverage for the Transmission Provider and its parent, associated and Affiliate companies and their respective directors, officers, agents, servants and employees, or in the event that such coverage would be at an unacceptably high expense to Transmission Provider, then the Parties shall make good-faith efforts to negotiate mutually agreeable alternative arrangements.

Notwithstanding the foregoing, nothing herein shall prevent Transmission Provider and Interconnection Customer from agreeing to different insurance limits from those provided in this Appendix F-1. In such a case, the Parties shall set forth the mutually agreed-to insurance coverages in this Appendix F-1.

B. Indemnification. Subject to any applicable Minnesota law or statute limiting the indemnification obligations of Interconnection Customer to Transmission Provider, Interconnection Customer shall at all times indemnify, defend and hold harmless Transmission Provider, its shareholders, members, partners, Affiliates, employees, consultants, representatives, agents, successors and permitted assigns ("Indemnified Party") from any and all liability, damages, losses and claims, including claims and actions relating to injury to or death of any person or damage to property, demand, suits, recoveries, costs and expenses, court costs, attorney fees and all other obligations by or to third parties, arising out of or resulting from Interconnection Customer's ("Indemnifying Party") negligence, or action or inactions of its obligations under this Interconnection Agreement, except in cases of negligence, gross negligence or intentional wrongdoing by the Indemnified Party.

Interconnection Customer's obligations to Transmission Provider under this paragraph shall be limited to $1,500,000 per occurrence.

APPENDIX G
SERVICE SCHEDULE - FACILITY CHARGE
Between NORTHERN STATES POWER COMPANY
And CITY OF ST. JAMES

Service Schedule

This Service Schedule provides a service where NSPM provides operates and maintains certain substation facilities so that Interconnection Customer's electrical requirements can be delivered at a distribution voltage. NSPM and Interconnection Customer entered into a Transmission Facilities Agreement ("TFA") on April 30th, 1981 as supplemented from time to time. The Interconnection Customer agreed to pay NSPM certain charges ("Facility Charge") associated with NSPM providing, operating and maintaining such substation facilities. The Parties desire to continue this arrangement and therefore this Service Schedule, Appendix G, shall remain in effect for the term of this Interconnection Agreement.

Rates and Charges

In consideration of NSPM providing, operating, and maintaining the substation facilities described in Appendix A-1, Interconnection Customer shall pay NSPM $2,400.00 per month commencing on the 20th day of the month following the effective date hereof.

In the event that additional investments are made by NSPM to improve the St. James Municipal Substation, NSPM and Interconnection Customer will enter good faith negotiations to modify the Facility Charge accordingly. If there is a need for material improvements or expansion, the Parties agree to discuss options prior to NSPM proceeding, to allow the Interconnection Customer to make a determination as to whether or not to proceed with the changes.

Billing and Payment

(a) Unless otherwise agreed, bills for services provided hereunder shall be rendered by the fifth working day of each month for services provided during the previous month. Interconnection Customer's payment to NSPM shall be due, if by mail, at NSPM's billing office, or if by wire transfer to a bank and account named by NSPM, no later than 15 days following the date of such invoice.

(b) Late Payment Charge: Payments received after the due date shall be considered late and shall bear interest on the payment in accordance with Section 9.02.

(c) The Facility Charge shall remain in effect until the termination of this Agreement.

List of Substation Facilities

This Facility Charge allows Interconnection Customer to utilize the NSPM substation facilities described in Appendix A-1.