SMUD 2013 Ten-Year Transmission Assessment Plan

Final

December 12, 2013

SMUD™

Prepared by: _____ Date: 12.12.13

Foung Mua
Senior Transmission Planning Engineer
Grid Planning

Approved by: _____ Date: 12/12/13

Craig Cameron
Supervisor
Grid Planning

Approved by: _____ Date: 12.12.13

Maria Veloso Koenig
Manager
Grid Planning

CONTENTS

Executive Summary III
1 Introduction 2
1.1 Reliability Criteria and Guidelines 2
1.2 Load Forecast 2
1.3 Demand Side Management Programs 5
1.4 Reactive Power Assumption 5
1.5 Generation Assumption 6
1.6 Proposed and Planned Transmission Projects List 6
2 Load Serving Capability 9
2.1 Near-Term Load Serving Capability 9
2.2 Long-Term Load Serving Capability 11
3 Reliability Assessment Results 14
3.1 Summer Adverse Peak System Conditions 14
3.2 Summer Off-Peak System Conditions 17
3.3 Transient Stability 20
4 Completed Transmission Projects 22
5 Planned Transmission Projects 24
5.1 Hurley 230 kV Shunt Capacitor 25
5.2 Franklin 230/69 kV Substation 26
5.3 200 MVAr of Capacitor Banks 28
5.4 Iowa Hill Pumped Storage Hydro Plant 29
5.5 Lake-Folsom-Orangevale 230 kV Reconductoring 32
5.6 North City SPS 34
6 Transmission Projects Needing Further Analysis 36
6.1 Tracy 500 kV Interconnection 37
7 New Transmission Project Proposals 41
8 Integrated Resource Plan 43
8.1 Gas Turbine Siting Assessment 44
8.2 Ione Renewable Energy Resources Interconnection 45
8.3 Solano Renewable Screening Analysis 46
8.4 Compressed Air Energy Storage 47
9 Balancing Authority Coordination Projects 49
9.1 Elverta 230 kV Line Swap 50
10 Sutter Energy Center Sensitivity 53
Appendix 1: Special Protection Systems 55
Appendix 2: Contingency List 59
Appendix 3: NERC/WECC Reliability Standards 60
Appendix 4: Steady State Power Flow Plots 65
Appendix 5: Dynamic Stability Plots 70

Executive Summary

SMUD performs an annual electric transmission system assessment to ensure that SMUD's transmission facilities continue to meet all applicable NERC/WECC Reliability Standards for the near-term (years one through five) and long-term (years six though ten) planning horizons.

For this report, SMUD performed:

- *Ten year planning assessment of the SMUD transmission system*

  A comprehensive assessment of the Sacramento Area electric transmission system was performed to ensure that NERC/WECC Reliability Standards are met through the ten year planning horizon. This year's assessment focuses on years 2014 through 2023 and addresses the bulk electric system issues that impact both the Load Serving Capability (LSC) and the local area. In addition, it also evaluates the system impacts resulting from extreme bulk electric system disturbances.

- *Annual SMUD Load Serving Capability (LSC) study*

  The LSC is the maximum demand that can be served with all facilities in service while meeting all applicable reliability standards.

  As of this year's planning assessment, Grid Planning is using the managed *base* growth demand forecast instead of the managed *high* growth demand forecast to more accurately reflect the historical growth experienced over the past several years.

  For the near-term planning horizon, years 2014 through 2018, and with the committed projects described in Table E-1, studies demonstrate that SMUD will be able to reliably serve peak demand in the near-term.

  Several project alternatives in Table E-2 provide additional margin above the forecasted peak load for the long-term planning horizon, years 2019 through 2023. A brief description of these projects is provided in Table E-2. For planning and modeling purposes only, the projects in Table E-2 are shown with preliminary in-service dates. No final decision has been made as to the timing or staging of these projects. SMUD will evaluate the need and timing of these projects and make a recommendation in future assessments.

  Figures E-1 and E-2 provide a graphical representation of the SMUD's LSC compared to the managed base growth demand forecasts with all the committed and proposed projects in-service as described in Tables E-1 and E-2.

- *System reliability risk studies based on WECC/NERC planning standards*

  SMUD used the 2013 PG&E Expansion Plan power flow base cases as a basis for this assessment. These cases incorporated a 1-in-10 year adverse peak load for both SMUD and the surrounding Sacramento Area. All applicable (Category A, B, C, and D) contingencies were simulated to determine compliance with NERC/WECC planning standards and identify any reliability concerns on the SMUD transmission system.

- *Transmission upgrade proposals to address reliability risks*

  The 2013 Ten-year Assessment Plan has identified no reliability violations based on performed power flow, voltage stability (PV and QV), and transient stability analyses.

- *Planned transmission projects*

  The committed projects identified in Table E-1 provide margin above LSC requirements to meet the 1-in-10 year load forecasts and meet the NERC/WECC Reliability Standards for years 2014 through 2023. Funds have been approved for their construction in order to meet the in-service dates described in the table.

Table E-1: Near-Term (Years 1-5) Transmission Projects

Project Name	Project Description	Project Status	Expected In-Service Date
Hurley 50 MVAr Shunt Capacitor	Install transmission capacitors	Committed	May 31, 2015
Franklin 230/69 kV Substation	New Distribution Substation	Proposed	May 31, 2018

For planning and modeling purposes only, the projects in Table E-2 are shown with preliminary in-service dates. No final decision has been made as to the timing or staging of these projects. SMUD will evaluate the need and timing of these projects and make a recommendation in future assessments. A more detailed discussion of these projects can be found in Chapter 5 of the report.

Table E-2: Long-Term (Years 6-10) Proposed Transmission Projects

Project Name	Project Description	Project Status	Proposed In-Service Date
Install 200 MVAr of transmission capacitors	Install transmission capacitors	Proposed	May 31, 2020
Iowa Hill Pumped Storage Facility	New Hydro Plant in the UARP	Proposed	May 31, 2020
Lake-Folsom-Orangevale 230 kV Reconductoring	Reconductor the Lake-Folsom-Orangevale 230 kV Lines	Proposed	May 31, 2020
North City SPS	Trip and Lockout North City 21 kV Feeders	Proposed	May 31, 2021

In addition to the aforementioned projects, other projects that could add transmission system infrastructure to increase the SMUD LSC include the following:

- A 500 kV transmission line interconnection to WAPA's Tracy station
- Convert the McClellan peaker into a synchronous condenser
- Static Var Systems added in the SMUD service area
- Modification or removal of the Lake – Gold Hill series reactor
- Resource Projects
    - Hybrid solar-thermal plant
    - Conventional natural gas peaking generation
    - Redesigned Dispatchable Demand Response

These projects are currently in the conceptual phase with preliminary studies underway.

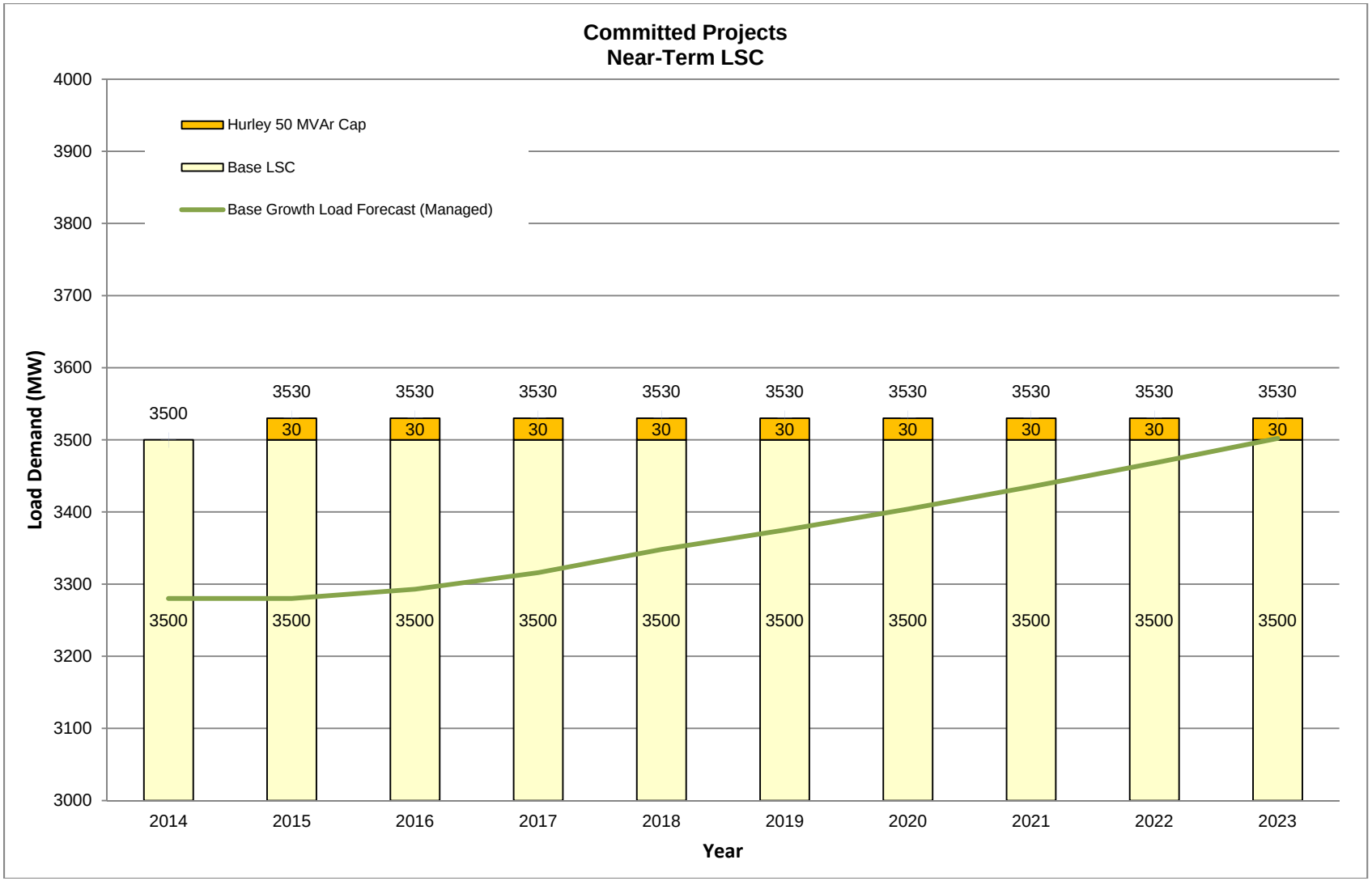

Figure E-1: Committed Projects (Near-Term LSC)

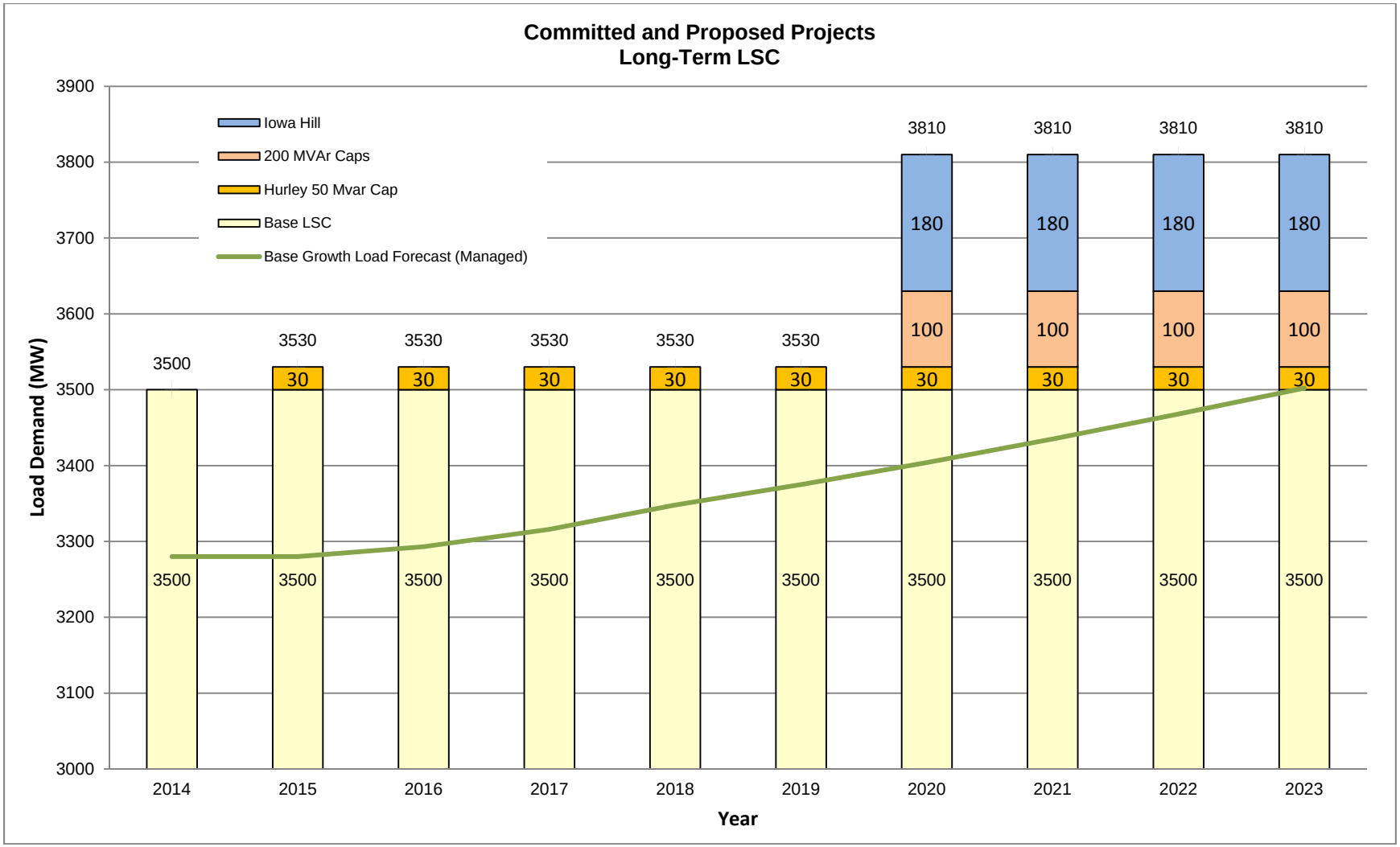

Figure E-2: Committed and Proposed Projects (Long-Term LSC)

Chapter 1:
Introduction

1 Introduction

The Sacramento Municipal Utility District (SMUD), established in 1946, is the nation's sixth largest community-owned electric utility in terms of customers served (approximately 590,000) and covers a 900 square mile area that includes Sacramento County and a small portion of Placer County. SMUD's all-time peak demand of 3,299 MW occurred on July 24, 2006.

A comprehensive year-by-year assessment of SMUD's transmission system is performed annually to ensure that NERC/WECC Reliability Standards are met each year of the ten year planning horizon. This assessment includes the near-term (2014 through 2018) and the long-term (2019 through 2023) planning horizons.

The 2013 Pacific Gas and Electric (PG&E) Expansion Plan power flow base cases were used as a basis for this assessment. These cases incorporate a 1-in-10 year adverse peak load for both SMUD and the surrounding Sacramento Area and have all projected firm transfers modeled. These cases are modified to include recent load forecast revisions, reflect expected generation patterns, and include updates for project proposals, delays or cancellations. In addition, no Capacity Benefit Margin (CBM) amount is used in the ten year planning horizon.

The Ten-Year Plan focuses on adverse weather peak system conditions and off-peak conditions including thermal, voltage stability and transient stability analyses.

1.1 Reliability Criteria and Guidelines

The 2013 annual assessment used the NERC/WECC Planning Standards, the WECC reactive margin criteria, and study methodology and guidelines to assess the SMUD transmission system. See Appendix 3: NERC/WECC Reliability Standards for details.

1.2 Load Forecast

SMUD's Resource Planning and Pricing Department provides annual load forecast updates. A base customer growth scenario combined with summer heat storm conditions is used for reliability planning. The load forecast reflects SMUD's significant investment in customer energy efficiency programs and expected SB1 solar installations and is referred to as the "managed" peak.

Starting with this year's planning assessment, Grid Planning (GP) is using the managed base growth demand forecast instead of the managed high growth demand forecast to perform local Sacramento Area transmission assessment studies. The base growth demand forecast more accurately reflects the historical growth experienced over the past several years.

The managed base growth forecast includes a portion of SMUD's energy efficiency and solar goals which are projected from planned expansion of existing energy efficiency programs and new subsidized rooftop solar generation programs. The forecast excludes future energy efficiency, demand reduction, and distributed generation programs that have not yet been designed. SMUD Staff develops the load forecast to ensure sufficient reliability projects are identified to meet the NERC/WECC reliability criteria considering risks related to future loads including higher than expected load growth, less than expected peak demand reductions from energy efficiency and distributed generation programs, and potential delays in siting of major transmission related facilities.

Table 1-1 provides the year by year load forecasts used in this study. Figure 1-1 is a graphical representation of the load forecasts and historical peaks dating back ten years.

Table 1-1: Adverse Peak Demand Load Forecast

1-in-10 Forecast (Managed)	2014 (MW)	2015 (MW)	2016 (MW)	2017 (MW)	2018 (MW)	2019 (MW)	2020 (MW)	2021 (MW)	2022 (MW)	2023 (MW)	Annual Load Growth (%/)
Base Growth	3,280	3,280	3,293	3,316	3,348	3,375	3,404	3,435	3,468	3,502	0.6

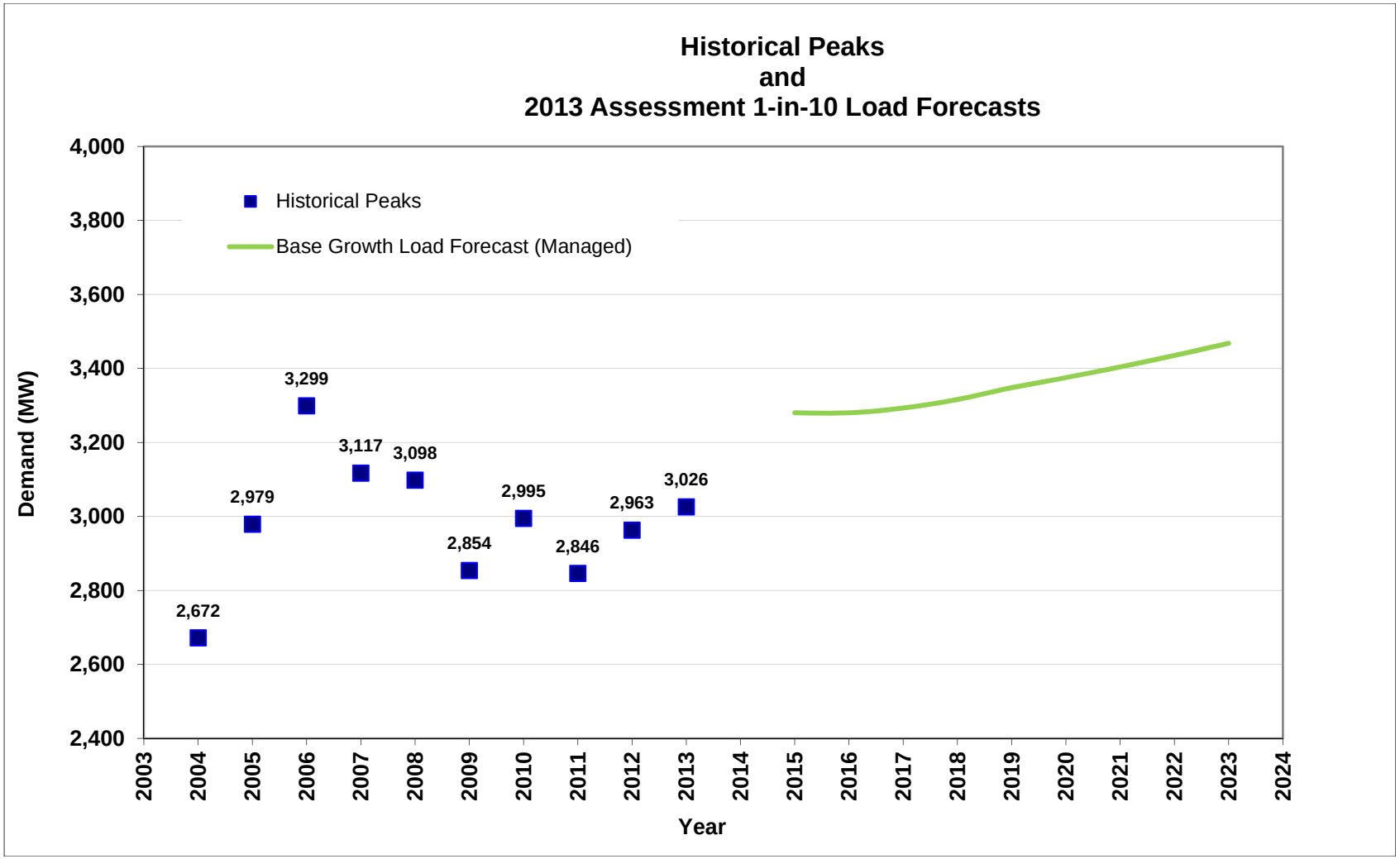

Figure 1-1: Historical and Forecast Demand Peaks

1.3 Demand Side Management Programs

SMUD's current Demand Side Management (DSM) programs are not typically used for transmission planning purposes as they are only used during emergencies or for proposed mitigation in the event that transmission or generation projects are delayed. However, DSM programs are currently being evaluated for re-design to allow for more frequent use and implementation being coordinated with a new two-way metering system and communication infrastructure. SMUD is evaluating a long-term commitment to these programs along with other demand and supply alternatives which may increase both transmission and distribution grid reliability. Once the new programs have been implemented, they will be evaluated for inclusion in SMUD's transmission planning or as a reduction to peak load.

1.4 Reactive Power Assumption

The electric demand modeled in the base cases represents a 0.983 lagging power factor at the distribution level based on input from Distribution Planning.

There are approximately 900 MVAr of 230 kV, 69 kV, 21 kV and 12 kV capacitors modeled in the base cases that are used by transmission and distribution operators to maintain voltages on both the transmission and distribution systems. Typically, new capacitors are installed at the low side of 230 kV or 115 kV step down transformers when new substations are completed or when the MVAr flow through the transformer becomes excessive and capacitors on the distribution system cannot be installed.

SMUD has begun to install transmission shunt capacitors at the 230 kV level. These capacitors provide operating flexibility, help maintain 230 kV voltages, compensate for reactive flows from the transmission system to the distribution system, and supply the reactive losses on intertie lines during peak periods with high import levels. In addition, as part of the SmartSacramento project, SMUD is installing distribution line capacitors for volt-var optimization.

There are also 70 MVAr of shunt reactors located in the SMUD's transmission system and modeled in the power flow cases. These reactors are located at Hurley, Orangevale and Pocket substations and are used to help lower bus voltages during off-peak conditions. During summer peak conditions, these reactors are switched out of service.

1.5 Generation Assumption

Table 1-2 indicates the output level assumptions (based on historical data) for the generating units in the SMUD transmission system.

Table 1-2: SMUD Area Generation Assumptions

Generation Type	SMUD Generation	Dependable Capacity (MW)	Power Flow Output Level (MW)
Hydro	Camino	156	100
	Jaybird	132	120
	Jones Fork	10	10
	Loon Lake	79	70
	Robbs Peak	26	20
	Union Valley	46	40
	White Rock	216	160
	Total Hydro Dispatch	*665*	*520*
Thermal	Campbell Soup	150	150
	McClellan	70	60
	Procter and Gamble	160	150
	Carson Ice	126	90
	Cosumnes	500	485
	UC Davis Medical Center	25	25
	Kiefer Land Fill[1]	0	0
	Total Thermal Dispatch	*1,031*	*960*
Total Generation Dispatch		**1,696**	**1,480**

In addition, there are approximately 100 MW of solar photovoltaic generation[2] (Feed-In Tariff) in the area. This assessment study maintains approximately 200 MW of operating reserves of internal SMUD generation under normal conditions.

1.6 Proposed and Planned Transmission Projects List

Table 1-3 lists the committed transmission projects that have an impact on SMUD's transmission network. This table lists only those projects that SMUD has committed to fund and construct. Some of these projects are near completion while others are still in the design stage. A more detailed discussion of these projects can be found in Chapter 5 of the report.

[1] Kiefer Land Fill is located on the distribution system and is represented as a negative load in the power flow model.
[2] Solar PV on-peak capacity factor is assumed at 60% and is represented as negative load in the power flow model.

Table 1-3: Near-Term Planned Transmission Projects

Project Name	Project Description	Year Proposal	Project Status	Expected Lead Time (Year)	Expected In-Service Date
Hurley 230 kV Shunt Capacitor	Install 50 MVAr transmission capacitors	2006	Committed	1	May 31, 2015
Franklin 230/69 kV Substation	New Distribution Substation	2005	Proposed	6	May 31, 2018

Table 1-4 lists the proposed projects that have an impact on SMUD's ability to reliably serve the long-term load forecast. These projects have been identified as alternatives in the 2019 through 2023 time frame for load serving requirements with the load growth scenario described in Section 1.2. A more detailed discussion of these projects can be found in Chapter 5 of the report.

Table 1-4: Long-Term Proposed Transmission Projects

Project Name	Project Description	Year Proposal	Project Status	Expected Lead Time (Year)	Proposed In-Service Date
Install 200 MVAr of transmission capacitors	Install transmission capacitors	2007	Proposed	2	May 31, 2020
Iowa Hill Pump Storage Facility	New Hydro Plant in the UARP	TBD	Proposed	8-10	May 31, 2020
Lake-Folsom-Orangevale 230 kV Reconductoring	Reconductor the Lake-Folsom-Orangevale 230 kV Lines	2008	Proposed	5	May 31, 2020
North City SPS	Trip and Lockout North City 21 kV Feeders	2010	Proposed	1	May 31, 2021

In addition to the aforementioned projects, other projects that could add transmission system infrastructure to increase the SMUD LSC include the following:

- A 500 kV transmission line interconnection to WAPA's Tracy station
- Convert the McClellan peaker into a synchronous condenser
- Static Var Systems added in the SMUD service area
- Modification or removal of the Lake – Gold Hill series reactor
- Resource Projects
    - Hybrid solar-thermal plant
    - Conventional natural gas peaking generation
    - Redesigned Dispatchable Demand Response

These projects are currently in the conceptual phase with preliminary studies underway.

Chapter 2:
Load Serving Capability

2 Load Serving Capability

SMUD's LSC is the maximum demand that can be served with all facilities in service while meeting all applicable reliability standards. The LSC is compared against the load growth demand forecast to determine potential reliability constraints and the need for transmission upgrades, demand side reductions, or generation projects. The LSC should exceed the load forecast to ensure bulk transmission system reliability.

2.1 Near-Term Load Serving Capability

The near-term planning horizon is defined as years one through five in the NERC Reliability Standards. Studies show that SMUD will be able to reliably serve load in years 2014 through 2018 with the committed transmission projects identified in Table 1-3 in service.

The LSC is limited by the WECC reactive margin criteria at Natomas 230 kV bus for loss of the Sutter-O'Banion 230 kV Line (N-1). Table 2-1 lists the LSC limitations for the near-term planning horizon.

Table 2-1: Near-Term LSC Limitations

Year	Limiting Contingency	Limiting Facility	LSC (MW)
2014	O'Banion-Sutter 230 kV (N-1)	WECC Reactive Margin Criteria at Natomas 230 kV Bus	3500
2015			3530
2016			
2017			
2018			

Figure 2-1 illustrates the LSC if the committed projects described in Table 1-3 are in service.

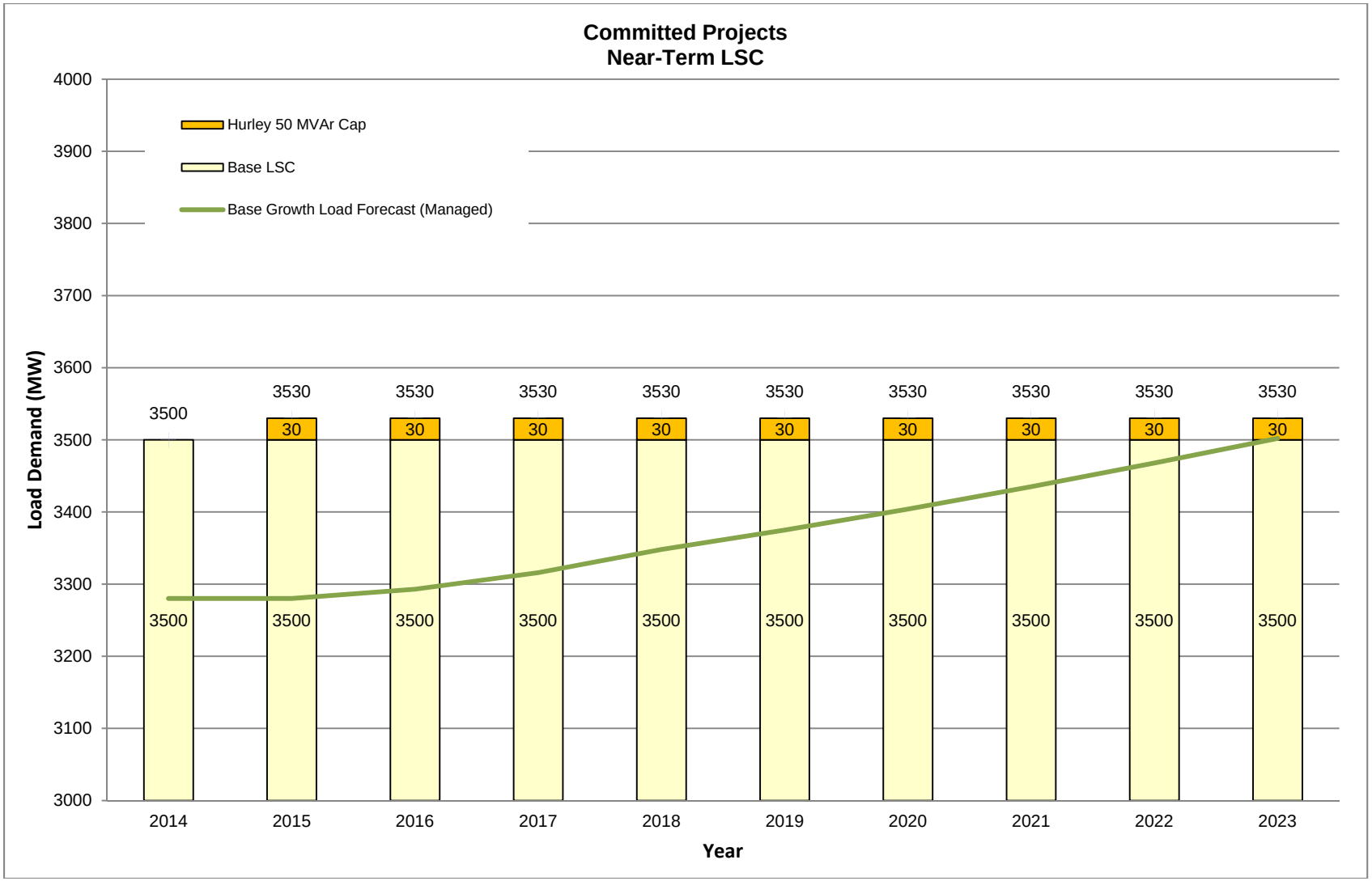

Figure 2-1: Committed Projects (Near-Term LSC)

2.2 Long-Term Load Serving Capability

Studies have shown that SMUD will be able to reliably serve the base growth scenario loads in years 2019 through 2023 with the committed and proposed transmission projects identified in Tables 1-3 and 1-4 in service. Additional reliability projects providing other alternatives to reliably meet these load levels are currently being identified and studied.

Table 2-2 lists the LSC limitations for the long-term planning horizon.

Table 2-2: Long-Term LSC Limitations

Year	Limiting Contingency	Limiting Facility	LSC (MW)
2019	O'Banion-Sutter 230 kV (N-1)	WECC Reactive Margin Criteria at Natomas 230 kV Bus	3,530
2020			3,810
2021			
2022			
2023			

Figure 2-2 illustrates the LSC if the committed and proposed projects are in service described in Tables 1-3 and 1-4.

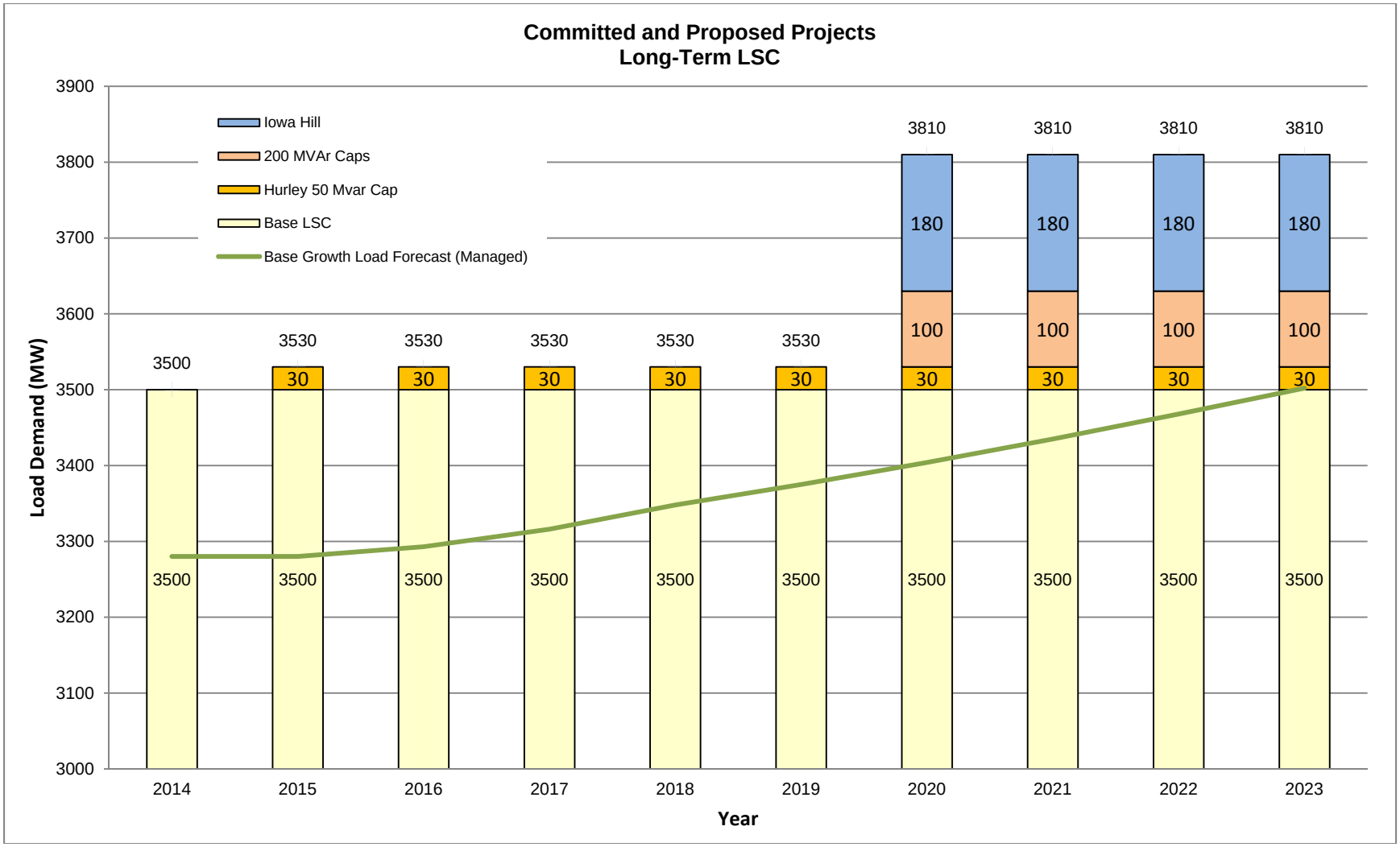

Figure 2-2: Committed and Proposed Projects (Long-Term LSC)

Chapter 3:
Reliability Assessment Results

3 Reliability Assessment Results

A comprehensive year-by-year electric transmission system assessment of the Sacramento Area is performed annually to ensure that NERC Reliability Standards are met each year. In addition to the required minimum five year planning horizon, SMUD also performed analysis for up to ten years. The power flow base cases used for this assessment include existing and planned facilities. This assessment is based on all contingencies applicable to Categories A, B, C, and D, which includes SMUD's owned transmission lines, generators, and transformers, and selected key facilities owned by neighboring utilities due to their proximity to the SMUD system. In addition, it includes the most severe double line outages that have limited SMUD's import and load serving capability.

The assessment results were performed modeling the load growth scenarios described in Section 1.2. Refer to the following paragraphs for a review of the assessment of SMUD's system under adverse peak conditions and off-peak conditions including thermal, voltage stability and transient stability analyses

3.1 Summer Adverse Peak System Conditions

For near-term system performance, the transmission assessment for the SMUD Area has demonstrated that there were no Category A, B, or C overloads. Category D results are given for informational purposes only and to be provided to WECC, as the Regional Reliability Organization (RRO), as required by the RRO. Refer to Table 3-1 for a review of the assessment results.

Category A – Normal Conditions

No Violations

Category B – Loss of a Single Bulk Electric System Element

No Violations

Category C – Loss of Two or More Bulk Electric System Elements

No Violations

Category D – Extreme Events Resulting Loss of Two or More Bulk Electric System Elements

- Elk Grove-Hedge 230 kV Corridor Section 1
- Elverta-Orangevale 230 kV Corridor Section 6 (with Carmichael SPS)

- Elverta 230 kV Substation

The probability for Category D (extreme contingency) events to occur is very low. However, if Category D events were to occur, the likely mitigation plan would be load shedding.

The purpose of the long-term analysis is to identify transmission facilities where longer term review may be required to ensure the transmission system continues to meet all applicable reliability standards. The transmission assessment for the SMUD Area has demonstrated that there were no Category A, B, or C overloads for the long-term planning horizon.

Category A – Normal Conditions

No Violations

Category B – Loss of a Single Bulk Electric System Element

No Violations

Category C – Loss of Two or More Bulk Electric System Elements

No Violations

Category D – Extreme Events Resulting Loss of Two or More Bulk Electric System Elements

Not required for long-term planning horizon

Table 3-1: Summer Adverse Peak Assessment Results

NERC Category	Contingency	Affected Facility	Facility Rating	2012 (%)	2013 (%)	2014 (%)	2015 (%)	2016 (%)	2017 (%)	2018 (%)	2019 (%)	2020 (%)	2021 (%)	Mitigation Plan
Category A - Normal Conditions														
A	None													
Category B - Loss of a Single Bulk Electric System Element														
B	None													
Category C - Loss of a Two or More Bulk Electric System Element														
C	None													
Category D - Extreme Event Resulting Loss of Two or More Bulk Electric System Elements														
D7	Elk Grove-Hedge 230 kV Corridor Section 1	Campbell-Hedge 230 kV	SE Amps 1,396	110	111	112	115	106	Not Required for Long-Term Planning Horizon					N/A
	Elverta-Orangevale 230 kV Corridor Section 6 [with Carmichael SPS]	Carmichael-Hurley 230 kV	SE Amps 925	101	101	100	99	99						
D8	Elverta 230 kV Substation	Hurley-Natomas 230 kV	SE Amps 801	150	150	154	154	159						

3.2 Summer Off-Peak System Conditions

As part of the PG&E Expansion Plan power flow base cases, two base cases were developed for the off-peak study. The two base cases represent 2018 and 2023 summer off-peak conditions. The 2018 base case meets the near-term planning horizon, while the 2023 base case meets the long-term planning horizon.

Although SMUD is a summer peaking area, the summer off-peak (low load and low generation conditions) assessment is performed to ensure any thermal or voltage violations under Category A, B, C, and D contingencies for the near and long-term planning horizons are identified and mitigated. Category D results are given for informational purposes only and to be provided to WECC, as the Regional Reliability Organization (RRO), as required by the RRO. The summer off-peak load demand is typically 60% of the summer peak. Refer to Table 3-2 for a review of the assessment results.

Category A – Normal Conditions

No Violations

Category B – Loss of a Single Bulk Electric System Element

No Violations

Category C – Loss of Two or More Bulk Electric System Elements

No Violations

Category D – Extreme Events Resulting Loss of Two or More Bulk Electric System Elements

- Near-Term: No Violations
- Long-Term: Not Required

Table 3-2: Summer Off-Peak

NERC Category	Contingency	Affected Facility	Facility Rating	2018 (%)	2023 (%)	Mitigation Plan
Category A – Normal Conditions						
A	None					
Category B - Loss of a Single Bulk Electric System Element						
B	None					
Category C – Loss of a Two or More Bulk Electric System Elements						
C	None					
Category D – Extreme Event Resulting Loss of a Two or More Electric System Elements						
D	None				N/A	

To ensure that SMUD's system remains reliable when generation is off-line for maintenance during off-peak conditions, the system was evaluated with Sutter Energy Center (SEC) and Cosumnes Power Plant (CPP) sequentially modeled off-line for maintenance. Refer to Tables 3-3 and 3-4 for a review of the assessment results.

Category A – Normal Conditions

No Violations

Category B – Loss of a Single Bulk Electric System Element

No Violations

Category C – Loss of Two or More Bulk Electric System Elements

No Violations

Category D – Extreme Events Resulting Loss of Two or More Bulk Electric System Elements

- Near-Term: None
- Long-Term: Not Required

Table 3-3: SEC Off-Line (Maintenance)

NERC Category	Contingency	Affected Facility	Facility Rating	2018 (%)	2023 (%)	Mitigation Plan
Category A – Normal Conditions						
A	None					
Category B - Loss of a Single Bulk Electric System Element						
B	None					
Category C – Loss of a Two or More Bulk Electric System Elements						
C	None					
Category D – Extreme Event Resulting Loss of a Two or More Electric System Elements						
D	None					

Table 3-4: CPP Off-Line (Maintenance)

NERC Category	Contingency	Affected Facility	Facility Rating	2018 (%)	2023 (%)	Mitigation Plan
Category A – Normal Conditions						
A	None					
Category B - Loss of a Single Bulk Electric System Element						
B	None					
Category C – Loss of a Two or More Bulk Electric System Elements						
C	None					
Category D – Extreme Event Resulting Loss of a Two or More Electric System Elements						
D	None					

.

3.3 Transient Stability

As part of the PG&E Expansion Plan power flow base cases, four base cases were developed for transient stability study for years 2018 and 2023. Two base cases were prepared for summer adverse peak and two for summer off-peak conditions. The 2018 base cases meet the near-term planning horizon, while the 2023 base cases meet the long-term planning horizon.

A total of 41 stability runs, including Category A, B, C, and D contingencies, were simulated to evaluate the transient stability of the SMUD transmission system under both summer adverse peak and summer off-peak conditions. The contingencies were developed to include SMUD owned transmission lines, generators and transformers, and select key facilities owned by outside utilities due to their proximity to the SMUD system. In addition, it includes the most severe double line outages that have limited SMUD's import and load serving capability.

All 41 contingencies were evaluated to ensure acceptable performance with the NERC/WECC reliability standards. The stability runs were run out to 20 seconds and demonstrated no instability and were positively damped.

Chapter 4:
Completed Transmission Projects

4 Completed Transmission Projects

There are no planned transmission projects that were completed in year 2013.

Chapter 5:
Planned Transmission Projects

5 Planned Transmission Projects

The projects listed in this chapter are proposed projects from previous assessments that were included in the base assessment assumption. This chapter provides detailed information on the planned transmission projects:

5.1 Hurley 230 kV Shunt Capacitor 25
5.2 Franklin 230/69 kV Substation 26
5.3 200 MVAr of Capacitor Banks 28
5.4 Iowa Hill Pumped Storage Hydro Plant 29
5.5 Lake-Folsom-Orangevale 230 kV Reconductoring 32
5.6 North City SPS 34

1

5.1 Hurley 230 kV Shunt Capacitor

EXPECTED IN-SERVICE DATE

May 31, 2015

PROJECT SCOPE

The scope of this project is to install 50 MVAr of 230 kV transmission capacitors at Hurley Substation (part of a total 150 MVAr of capacitor banks).

BACKGROUND

The locations currently selected for transmission capacitor installations are Elk Grove, Natomas, and Hurley substations. These locations were selected primarily by evaluating the substation reactive load, voltage response to severe NERC Category C contingencies and the proximity to interconnection points with other utilities.

SYSTEM IMPACTS

The installation of 150 MVAr of transmission capacitors reduces system losses, improves the 230 kV voltage profile, supplies substation reactive demand, provides reactive support for high import levels and system disturbances, improves operating flexibility, and simplifies reactive device coordination with SMUD's distribution system. In addition, the capacitors can significantly increase the SMUD's LSC.

ONE-LINE DIAGRAM

- None

5.2 Franklin 230/69 kV Substation

EXPECTED IN-SERVICE DATE

May 31, 2018

PROJECT SCOPE

This project will construct a new distribution substation with a breaker and a half bus configuration. In addition, the Rancho Seco-Pocket 230 kV No. 1 line will be looped into the substation and one16.2 MVAr of capacitor bank will be installed. The substation will include 5-230 kV circuit breakers and a single 230/69 kV transformer, rated at 224 MVA.

BACKGROUND

The Franklin 230/69 kV Substation site is located near the intersection of Franklin Boulevard and Bilby Road. The substation is adjacent to the Rancho Seco - Pocket 230 kV DCTL.

SYSTEM IMPACTS

There are no NERC Reliability Standard violations associated with the construction of this substation. Primarily, Franklin Substation off loads the Pocket and Elk Grove substations and meets customer demand.

ONE-LINE DIAGRAMS

- Figure 5-1: Conceptual Franklin One-Line Diagram
- Figure 5-2: Franklin Location Diagram

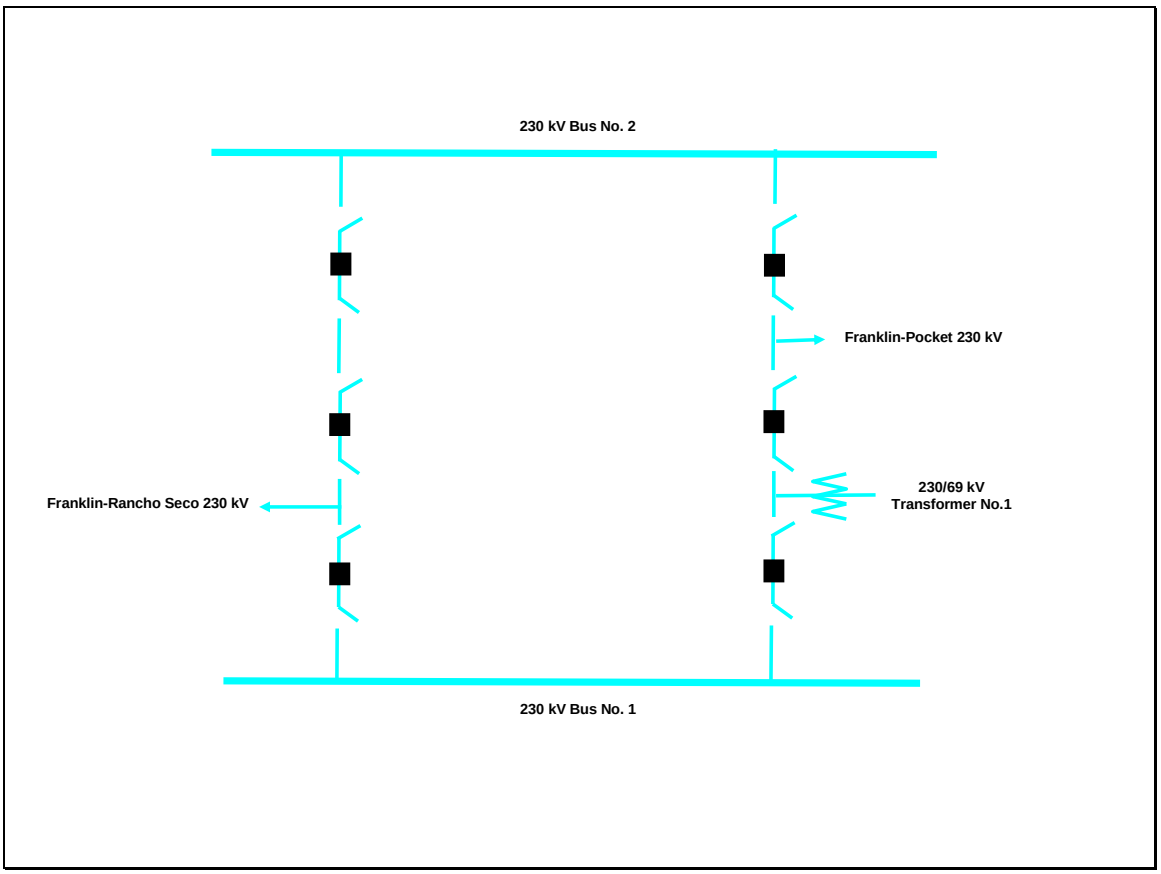

Figure 5-1: Conceptual Franklin One-Line Diagram

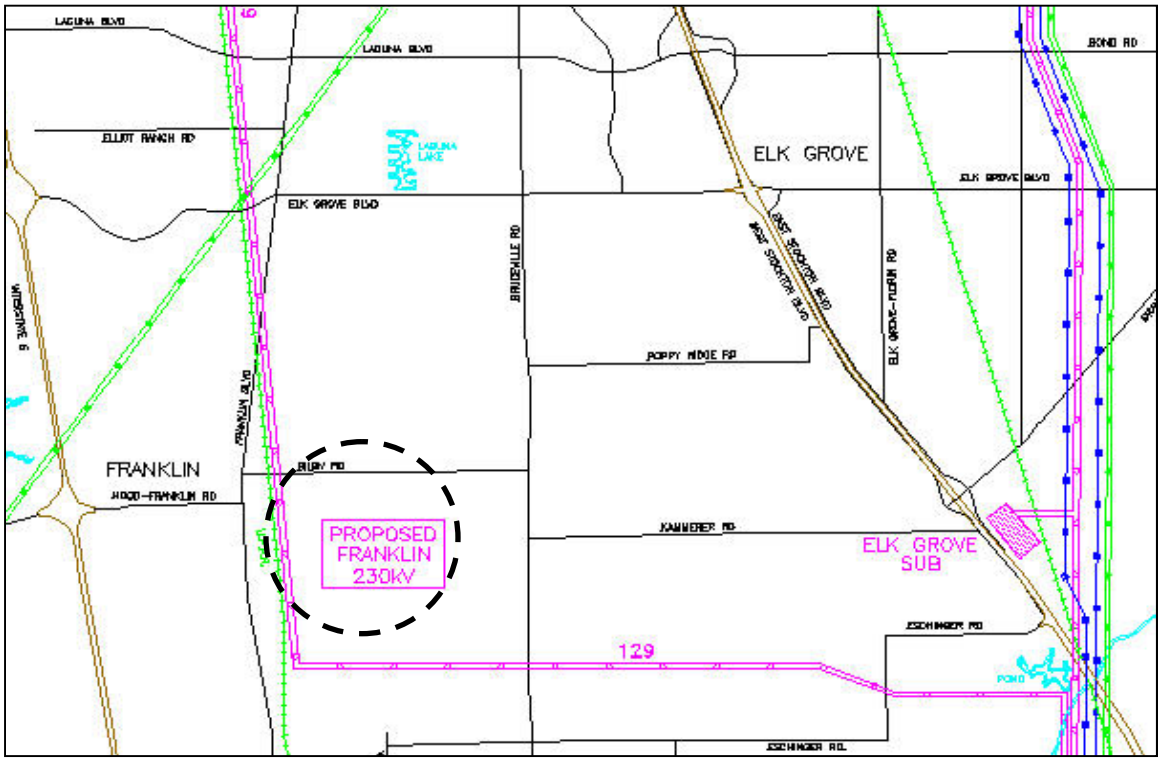

Figure 5-2: Franklin Location Diagram

5.3 200 MVAr of Capacitor Banks

EXPECTED IN-SERVICE DATE

May 31, 2020

PROJECT SCOPE

The scope of this project is to install 200 MVAr transmission capacitor banks (in conjunction with Iowa Hill Pumped Storage Plant Project) to provide a gain in LSC close to the plant capacity.

BACKGROUND

The 400 MW Iowa Hill Pumped Storage Plant provides many reliability benefits and increases SMUD's ability to reliability serve load. However, it does not provide the desired increase in LSC.

Possible locations selected for transmission capacitor installation include Lake, Orangevale, Cordova, and Elverta substations. These locations were selected because they are substations where the UARP transmission lines terminate or are important interconnection points with other utilities:

- Lake 230 kV 50 MVAr
- Orangevale 230 kV 50 MVAr
- Cordova 230 kV 50 MVAr
- Elverta 230 kV 50 MVAr

SYSTEM IMPACTS

A combination of adding transmission capacitors may allow this 400 MW plant to be near 100% effective in increasing LSC. In addition, the capacitors will compensate for the increased system reactive losses.

ONE-LINE DIAGRAM

None

5.4 Iowa Hill Pumped Storage Hydro Plant

EXPECTED IN-SERVICE DATE

May 31, 2020

PROJECT SCOPE

The scope of this project is to construct a 400 MW Iowa Hill Pumped Storage Hydro Plant within SMUD's Upper American River Project (UARP). The plant is expected to interconnect to the White Rock–Camino 230kV Line through a new 230 kV switchyard and a 2 miles long double circuit 230 kV transmission line.

In addition, reconductoring the following UARP 230 kV lines with high ampacity 954 ACSS conductors will be necessary:

- White Rock-Orangevale 230 kV
- White Rock-Cordova 230 kV
- Camino-Lake 230 kV
- Camino-White Rock 230 kV
- Jay Bird-White Rock 230 kV

The 954 ACSS conductor has a normal and emergency rating of 1,714 amps.

BACKGROUND

The Iowa Hill site is adjacent to the existing Slab Creek reservoir within SMUD's UARP. Iowa Hill would pump during low load periods and generate during peak load conditions.

The addition of 400 MW of additional generation in the UARP will require transmission reinforcement to allow delivery of the full output from Iowa Hill. Table 5-1 lists the existing UARP transmission lines.

Table 5-1: Existing UARP 230 kV Lines

Transmission Facility	Conductor Type	Ratings [Amps] (SN/SE)	Line Length (Mile)
White Rock-Orangevale 230 kV	954 AAC	801/923	31
White Rock-Cordova 230 kV	954 AAC	801/923	31
Camino-Lake 230 kV	954 AAC	801/923	32
Camino-White Rock 230 kV	954 ACSR	883/954	10

Transmission Facility	Conductor Type	Ratings [Amps] (SN/SE)	Line Length (Mile)
Jay Bird-White Rock 230 kV	795 ACSR	761/864	16
Jay Bird-Union Valley 230 kV	795 ACSR	778/801	6
Camino-Union Valley 230 kV	954 ACSR	761/863	12

Previous analysis indicated that there would likely be strong opposition to constructing a fourth circuit through a 7 mile section of the El Dorado Hills Area to accommodate this project. As a result, the current proposal consists of reconductoring some of the existing 230 kV lines with high ampacity 954 kcmil ACSS conductor.

Reconductoring the UARP 230 kV transmission lines with high ampacity 954 ACSS conductor allows the Iowa Hill plant to deliver 400 MW to the SMUD load center. However, the high ampacity conductor does not allow a corresponding 400 MW increase in SMUD's LSC during peak conditions. The reason for this is that ACSS conductor has a higher resistance, so an increase in resistance will increase the I^2R losses and will increase the line impedance; therefore, increasing the voltage drop along the line.

SYSTEM IMPACTS

In addition, the Iowa Hill Project causes thermal overloads on the Folsom-Orangevale and Folsom-Lake 230 kV lines following NERC Category C contingencies. A possible reinforcement plan is to reconductor these 230 kV lines.

ONE-LINE DIAGRAMS

- Figure 5-3: Iowa Hill One-Line Diagram
- Figure 5-4: Iowa Hill Location within UARP

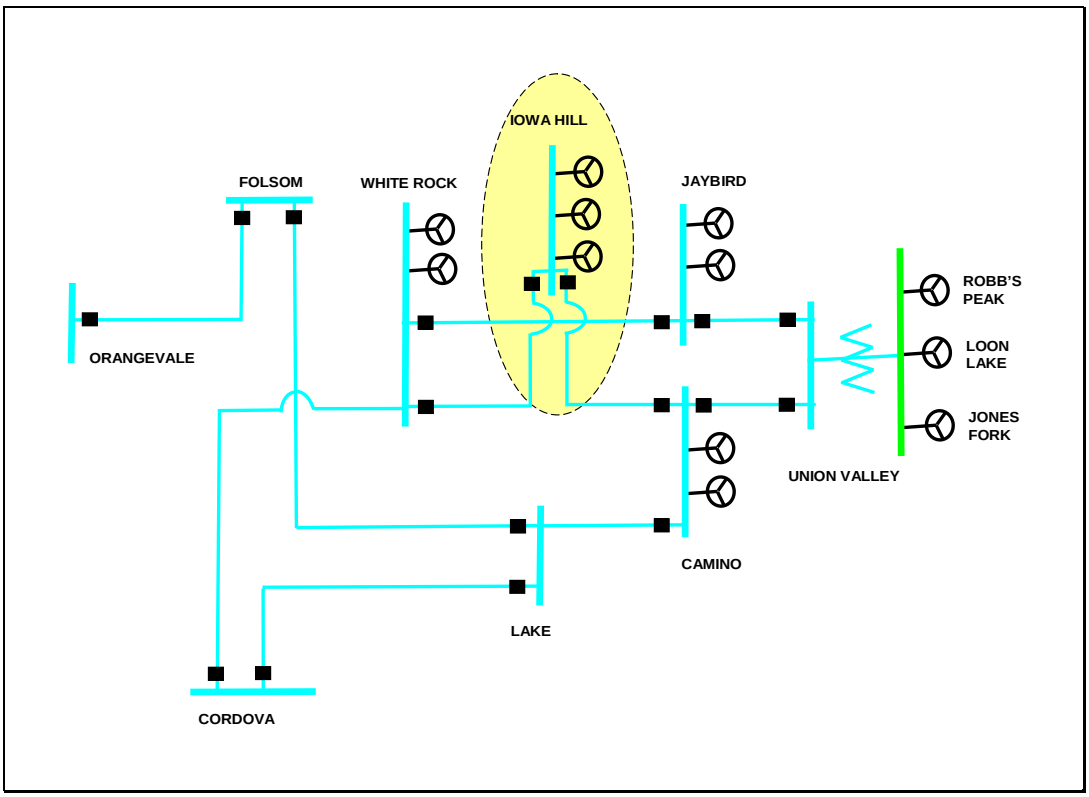

Figure 5-3: Iowa Hill One-Line Diagram

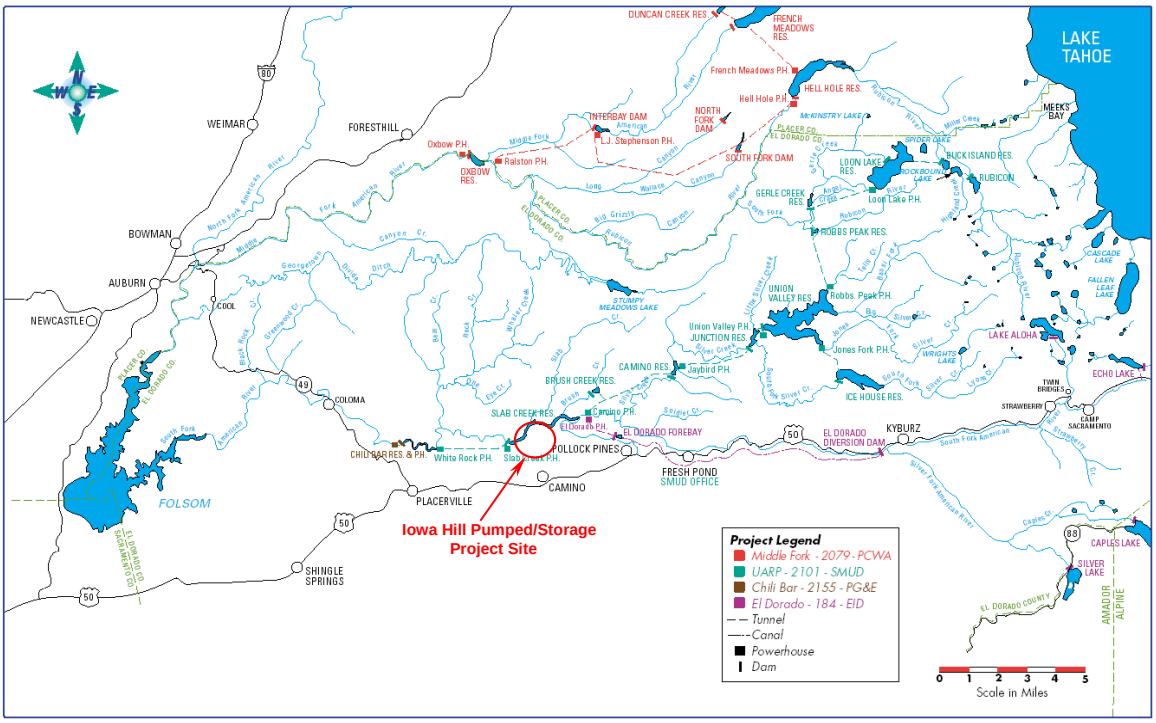

Figure 5-4: Iowa Hill Location within UARP

5.5 Lake-Folsom-Orangevale 230 kV Reconductoring

EXPECTED IN-SERVICE DATE

May 31, 2020

PROJECT SCOPE

The scope of this project is to reconductor the Lake-Folsom and Folsom-Orangevale 230 kV lines (in conjunction with Iowa Hill) with a higher ampacity conductor (1,714 Amps summer emergency). If necessary, an upgrade of associated line terminal equipments to accommodate the new ratings may be required.

BACKGROUND

The Iowa Hill Pumped Storage Plant provides many reliability benefits and increases SMUD's ability to reliability serve load. However, it causes thermal overloads on the 230 kV circuits which bring UARP power into the SMUD load center. Two of the 230 kV circuits are the Lake-Folsom and Folsom-Orangevale 230 kV lines.

The Lake-Folsom and Folsom-Orangevale 230 kV lines are approximately 6 and 4 miles long, respectively, and consist of 954 AAC conductors. It has a normal conductor rating of 801 Amps and an emergency rating of 924 Amps.

ONE-LINE DIAGRAM

- Figure 5-5: Lake-Folsom-Orangevale Area Diagram

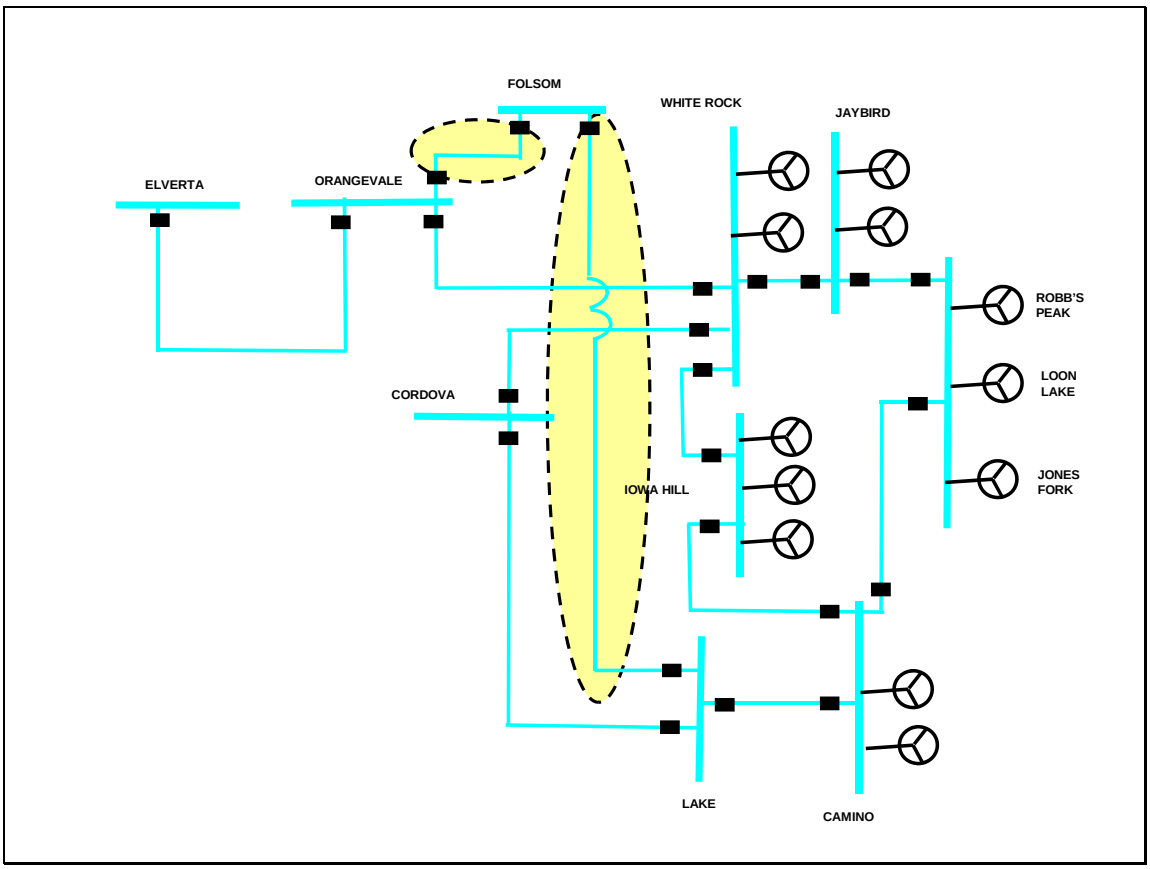

Figure 5-5: Lake-Orangevale Area Diagram

5.6 North City SPS

EXPECTED IN-SERVICE DATE

May 31, 2021

PROJECT SCOPE

The scope of this project is to install a SPS to trip and lockout North City 21 kV feeders sequentially until the overloads on the Elverta 230/115 kV transformer and Elverta-North City 115 kV line are mitigated.

BACKGROUND

The downtown area load is served by three main substations (Elverta and Hurley substations from the north and Hedge substation from the south). Hurley substation, a main and transfer bus arrangement, is a critical interconnection point with Western and a main hub for imports. A bus fault at Hurley results in the loss of the entire station.

SYSTEM IMPACTS

Under adverse peak conditions, a fault on the Hurley 230 kV or 115 kV bus causes thermal overloads on the Elverta 230/115 kV transformer and the Elverta-North City 115 kV line.

ONE-LINE DIAGRAM

None

Chapter 6:
Transmission Projects Needing Further Analysis

6 Transmission Projects Needing Further Analysis

The projects listed in this chapter are transmission projects that are still in the preliminary stages and will require further analysis. This chapter provides details for each transmission projects:

6.1 Tracy 500 kV Interconnection 37

6.1 Tracy 500 kV Interconnection

BACKGROUND

A Tracy 500 kV Interconnection adds transmission system infrastructure to increase SMUD LSC. Currently, the Tracy 500 kV Interconnection is still in the conceptual phase. One of the delivery points is within SMUD's territory just south of the City of Elk Grove (referred to as Switching Station in this report). This project will be sponsored by Western, though SMUD requested the transmission service.

Two alternatives were examined and all alternatives included the following models as the base:

- New 500/230 kV Switching Station
- New 500 kV line from Tracy to the Switching Station.

Alternative 1 includes looping the Franklin-Rancho Seco 230 kV Line and the Pocket-Rancho Seco 230 kV Line into the Switching Station. Refer to Figure 6-1.

Alternative 2 includes looping the Franklin-Rancho Seco 230 kV Line and the Elk Grove-Rancho Seco 230 kV #1 Line into the Switching Station. Refer to Figure 6-2.

The analysis evaluated the system impacts on SMUD's transmission system with the addition of the 500 kV source. In addition, there may be various other alternatives to be taken into consideration in future assessments.

SYSTEM IMPACTS

Power flow analysis performed on the alternatives indicated that Alternatives 1 and 2 could have impact on the following SMUD 230 kV and 115 kV transmission lines, specifically:

- Campbell-Hedge 230 kV Line
- Hurley-Procter 230 kV Line
- Hedge-South City 115 kV #1 and #2 Lines
- East City-Hedge 115 kV Line.

ONE-LINE DIAGRAMS

- Figure 6-1: Alternative 1
- Figure 6-2: Alternative 2

Alternative 1: Loop Franklin-Rancho Seco and Pocket-Rancho Seco 230 kV Lines into Switching Station

This alternative involves looping the Franklin-Rancho Seco and Pocket-Rancho Seco 230 kV lines into the new Switching Station.

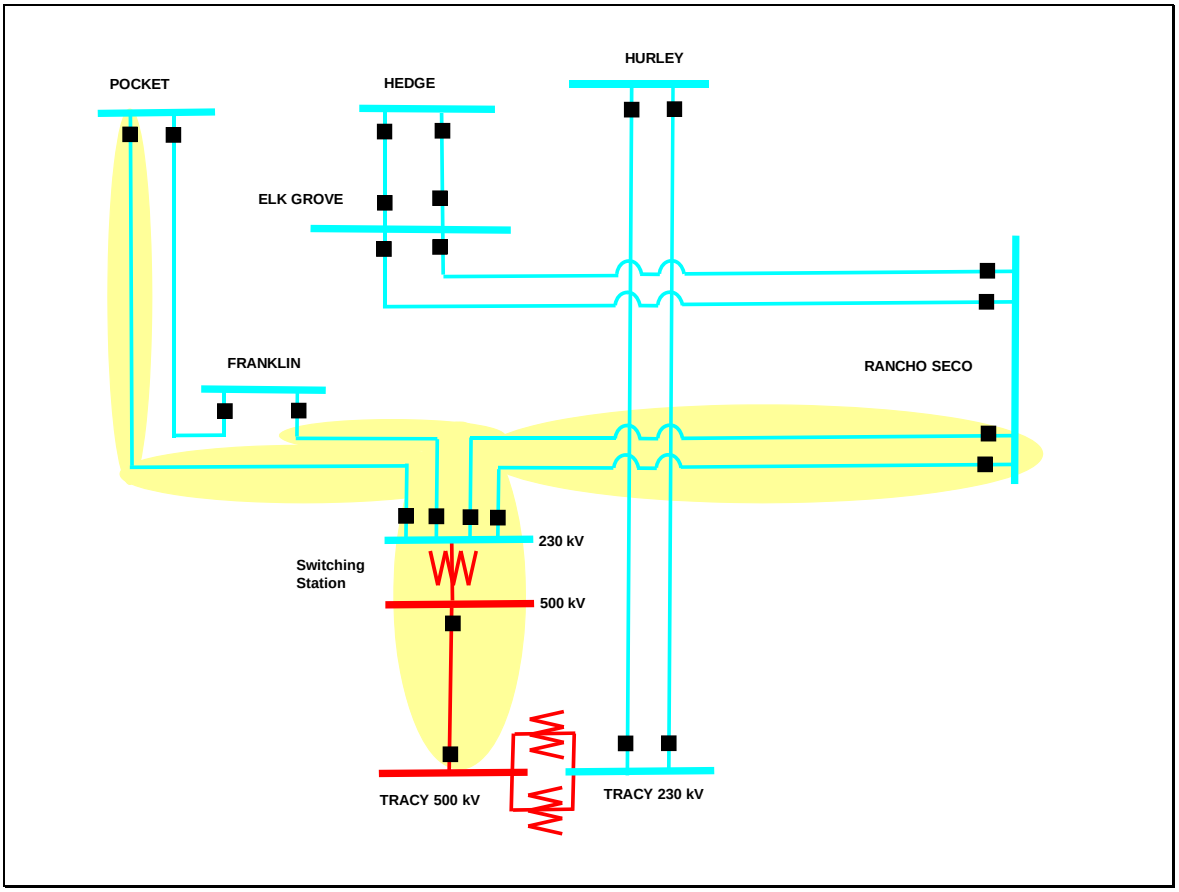

Figure 6-1: Alternative 1

Alternative 2: Loop Franklin-Rancho Seco and Elk Grove-Rancho Seco 230 kV #1 Lines into Switching Station

This alternative involves looping the Franklin-Rancho Seco and Elk Grove-Rancho Seco 230 kV #1 lines into the new Switching Station.

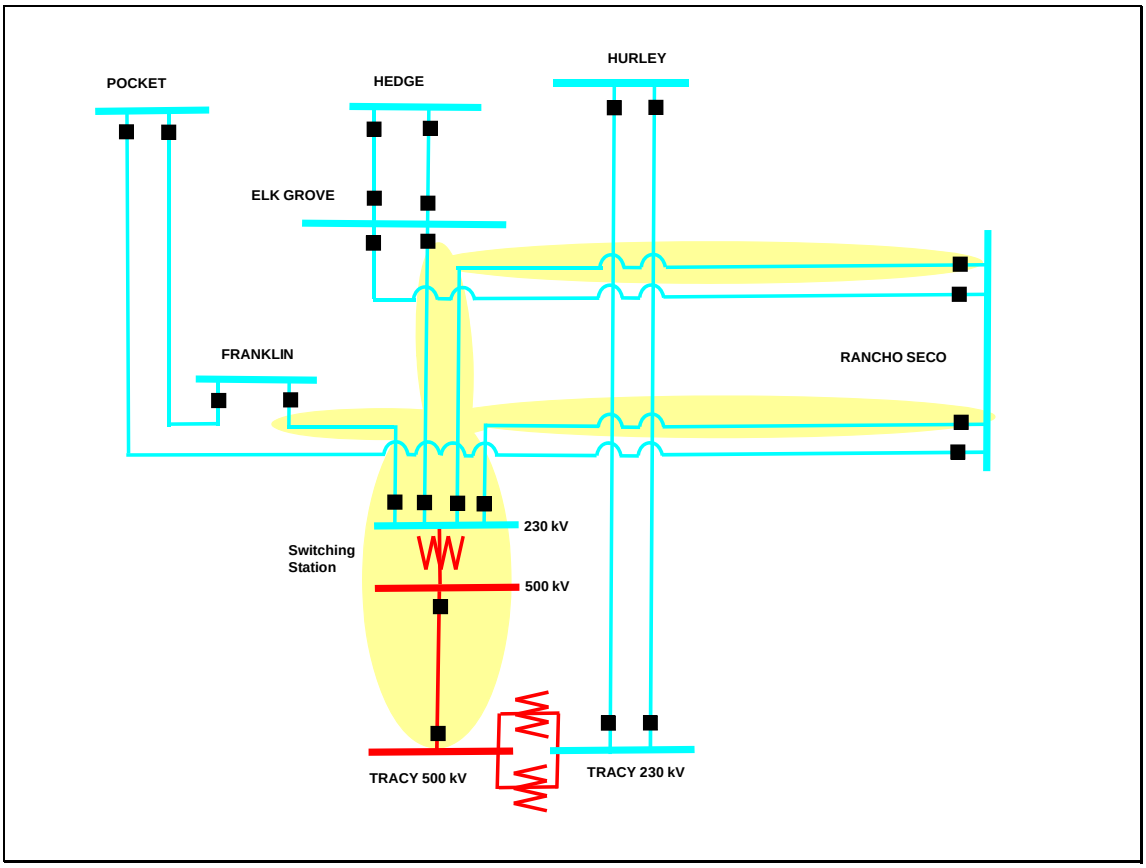

Figure 6-2: Alternative 2

Chapter 7:
New Transmission Project Proposals

7 New Transmission Project Proposals

There are no new upgrade proposals for the 2013 transmission assessments.

Chapter 8:
Integrated Resouce Plan

8 Integrated Resource Plan

SMUD's Integrated Resource Plan (IRP) develops strategies and recommendations for developing a reliable, sustainable and environmentally responsible portfolio of supply and demand side resources while maintaining competitive rates for the next twenty years. In this section, Grid Planning lists additional projects studied as part of the IRP which were not discussed in previous sections of this document. These conceptual projects, if completed, will increase SMUD's LSC.

8.1 Gas Turbine Siting Assessment 44
8.2 Ione Renewable Energy Resources Interconnection 45
8.3 Solano Renewable Screening Analysis 46
8.4 Compressed Air Energy Storage 47

8.1 Gas Turbine Siting Assessment

BACKGROUND

A natural gas turbine generator interconnection increases SMUD LSC. Currently, the natural gas siting is still in the conceptual phase. Several potential sites for the proposed 50 MW gas turbine generator within SMUD service area includes:

- Hedge substation
- Elk Grove substation
- Elverta 230 kV substation
- Procter substation
- Campbell Soup substation

All these substations have room for expansion, but Hedge, Elk Grove, and Elverta would require gas pipeline extensions.

SYSTEM IMPACTS

All sites are reasonably comparable with LSC increases ranging between 33 and 39 MW. However, additional generation at Elverta could exacerbate existing thermal overloads in the Elverta area. Table 8-1 lists the LSC increases associated with each site.

Table 8-1: LSC Gain

Site	LSC Gain (MW)	Gas Availability	Note
Procter	36	On-Site	Unloads Elverta area facilities
Hedge	36	1.5 miles	Unloads Elverta area facilities
Elverta	39	Approx. 15 miles	Exacerbates Elverta area facilities
Campbell	34	On-Site	
Elk Grove	33	3.6 miles	

ONE-LINE DIAGRAM

None

8.2 Ione Renewable Energy Resources Interconnection

BACKGROUND

SMUD's Integrated Resource Plan (IRP) steering committee requested Grid Planning to assess the high-level transmission issues associated with interconnection of a potential solar thermal plant and the recently approved purchase power agreement with a biomass plant near Ione, California to SMUD service area.

Two options, a 230 kV and 69 kV interconnections, were evaluated for the combined renewable energy output at 200 MW and 90 MW, respectively. Both interconnection points are near Rancho Seco site.

SYSTEM IMPACTS

A direct interconnection to SMUD provides benefits to SMUD. Both 230 kV and 69 kV options increase the SMUD's LSC between 30 MW and 70 MW.

ONE-LINE DIAGRAM

None

8.3 Solano Renewable Screening Analysis

BACKGROUND

Currently, Solano's wind generating capacity is 230 MW and is interconnected through the PG&E transmission network. IRP steering committee requested GP to assess the high-level transmission issues associated with interconnection potential future SMUD projects at Solano including the installation of the Solano Wind Generation Phase 3 (100 MW) and the solar PV (200 MW), which could bring the total Solano generation to 400 MW.

SYSTEM IMPACTS

The following three options were evaluated for LSC gain:

- Alternative 1 - A 45 mile 230 kV interconnection to Rancho Seco increases SMUD's LSC by 0.5 (i.e., 2 MW generation increases LSC by 1 MW) and requires an upgrade to the Campbell Soup-Hedge 230 kV line if the renewable resources exceed 200 MW.

- Alternative 2 - A 500 kV loop in of COTP to a new switchyard provides no additional LSC benefits to SMUD.

- Alternative 3 - In addition to Alternative 2, a 30 mile 500 kV interconnection to Dillard Road Substation increases SMUD's LSC by 320 MW and requires an upgrade to the following SMUD 230 kV transmission lines:

    - Campbell Soup-Hedge 230 kV
    - Dillard Road-Franklin 230 kV
    - Hurley-Procter 230 kV.

ONE-LINE DIAGRAM

None

8.4 Compressed Air Energy Storage

BACKGROUND

The proposed Compressed Air Energy Storage (CAES) Project (135 MW or 270 MW generation output) is located south of the City of Elk Grove. Three interconnection alternatives were evaluated to determine the transmission system impacts:

- Alternative 1 – Interconnect to the Tracy-Hurley 230 kV lines
- Alternative 2 – Interconnect to the future Franklin 230 kV substation
- Alternative 3 – Interconnect to the Elk Grove 230 kV substation.

SYSTEM IMPACTS

Based on preliminary assessments, significant transmission upgrades or additions will be required to accommodate either a 270 MW or 135 MW CAES project interconnected to WAPA's Tracy-Hurley 230 kV lines.

Interconnections to SMUD's Franklin or Elk Grove stations would not require additional upgrades but would require transmission to be constructed to the CAES project site.

ONE-LINE DIAGRAM

None

Chapter 9:
Balancing Authority Coordination Projects

9 Balancing Authority Coordination Projects

This section details transmission projects coordinating between Balancing Authority of Northern California (BANC) and other BA's. These projects are in the preliminary stages and if completed, could increase transmission system reliability.

9.1 Elverta 230 kV Line Swap 50

9.1 Elverta 230 kV Line Swap

BACKGROUND

This is the Western Area Power Administration's (WAPA) project to move the O'Banion-Elverta 230 kV line #2 to the Roseville-Elverta 230 kV line position and the Roseville-Elverta 230 kV line to the O'Banion-Elverta 230 kV line position at Elverta Substation. This project addresses loading issues on the Elverta-Hurley 230 kV #2 line following the Elverta 1182 stuck breaker failure and mitigates the need to limit Sutter Energy Center output under certain operating conditions.

ONE-LINE DIAGRAM

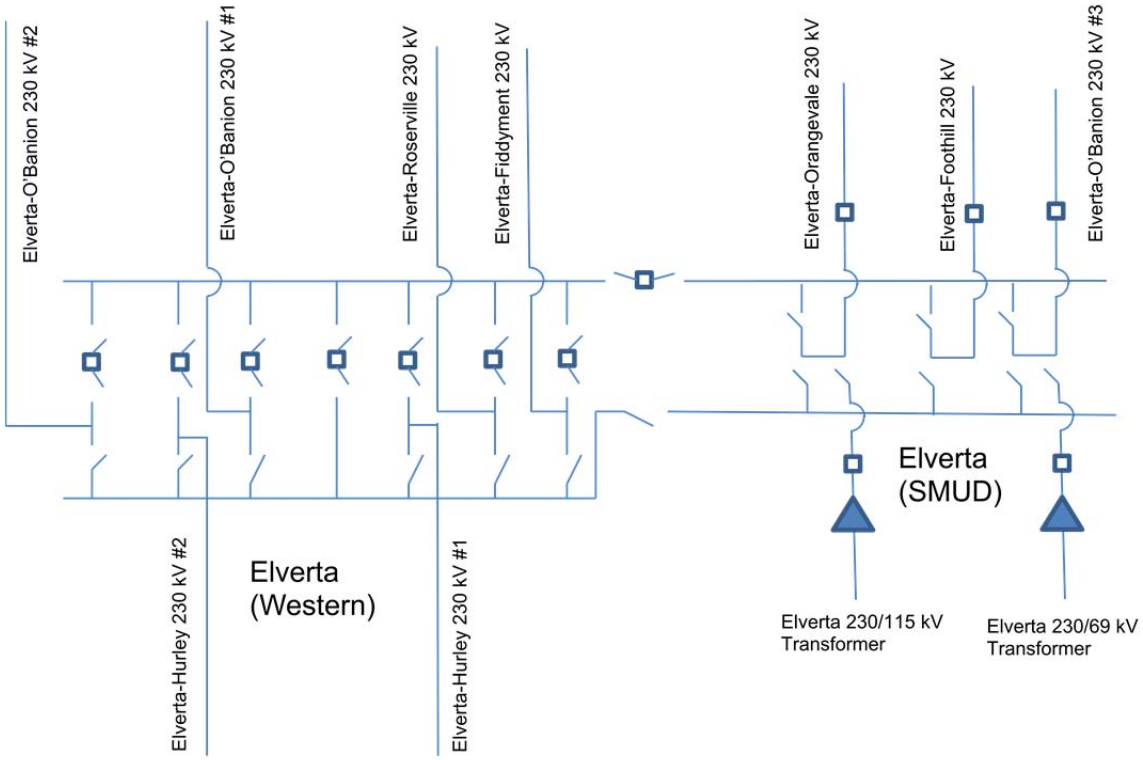

Figure 9-1: Existing Elverta Substation

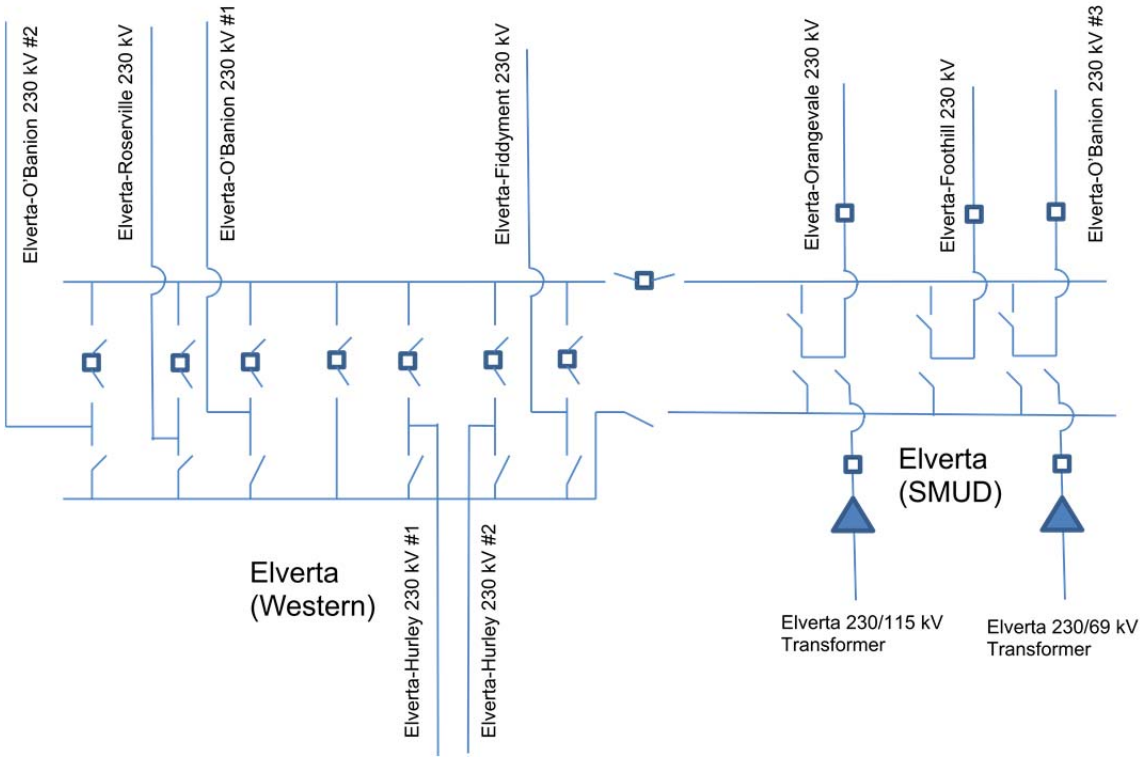

Figure 9-2: Elverta 230 kV Line Swap

Chapter 10:
Sutter Energy Center Sensitivity

10 Sutter Energy Center Sensitivity

The Sutter Energy Center (SEC) is a natural gas fired, combined-cycle facility located near Yuba City, California with a total maximum output of 525 MW. It commenced commercial operation in 2001 and provides voltage support to the Sacramento area region. Currently, SEC is interconnected to the transmission system operated by the Western Area Power Administration (WAPA) and operates in the CAISO markets pursuant to a pseudo-tie arrangement with the CAISO. The generation plant is owned by Calpine.

In March of 2013, Calpine submitted a Petition for Modification for SEC[3] proposing modifications including a new substation and 230 kV underground generation tie-line that would change the interconnection point to the CAISO.

SMUD is evaluating any potential impacts and whether mitigation will be required.

[3] http://docketpublic.energy.ca.gov/PublicDocuments/Compliance/97-AFC-2C/TN%2070201%2003-22-13%20Calpine%20Corporation's%20Petition%20for%20Modification.pdf

Appendices

Appendix 1: Special Protection Systems

There are several Special Protection Systems (SPS) in the Sacramento Area designed to protect equipment and/or to maintain system reliability in the event of severe contingencies.

Sutter Special Protection System (SPS)

Refer to WASN's OP-61 Special Protection Schemes for Sutter Special Protection Scheme, under Section b on page 5.

Procter Special Protection System (SPS)

The Procter SPS will trip the Hurley-Procter 230 kV Line in the event that a disturbance causes the Procter-Hedge 230 kV Line to overload. A worst-case scenario (CPP off-line) for this is the double contingency loss of the Rancho Seco-Bellota 230 kV lines and all SPS actions associated with the contingency occurred at the same time.

SMUD Direct Load Tripping (DLT)

The SMUD DLT is an automated Load Shedding application on the SMUD EMS. The scheme is available to be armed by SMUD dispatchers under certain scenarios. EMS must be operating for SMUD DLT to be activated since both detection and activation are performed by EMS.

The SMUD DLT monitors the line status on the following three 230 kV tie-line group:

1. N-2: Rancho Seco-Bellota #1 and #2
2. N-2: Tracy-Hurley #1 and #2
3. N-4: Elverta-O'Banion #1 & #2 & #3, and Natomas-O'Banion

In addition, voltages at Elverta, Hurley, Rancho Seco, Pocket, and Lake are also monitored. The scheme implements a dispatcher specified amount of load shed in approximately 10 seconds upon the detection of the loss of any one of the three tie-line groups listed above, or if the majority of the monitored voltages (4 out of 6 buses or more) drop to less than 212 kV for 10 consecutive seconds.

The Load Shedding scheme consists of individual 12 kV distribution substation feeders that have SCADA control. The scheme receives real-time information on the loading and status of each of these distribution feeders and determines the number of feeders to trip to give the desired amount of Load Shedding. The application opens just enough feeder breakers to shed the desired load amount. Interrupting smaller increments of load at the 12 kV levels, instead of shedding load at the bulk transformer or 69 kV feeder level gives better control in shedding the specified amount of load, and limits the amount of excess load shedding.

Under Voltage Direct Load Shedding Scheme (UVDLS)

SMUD also has an UVDLS located at several substations. This scheme is armed continuously and acts as an added safety net to shed load automatically for severe contingencies.

The UVDLS Timer will reset when the 230 kV system voltage recovers above 218 kV for 6 cycles or 220 kV instantaneously. That is, UVDLS will operate when the 230 kV system voltage at local substations drops below 212 kV and stays below 218 kV for 15 consecutive seconds. See the diagram below for more details.

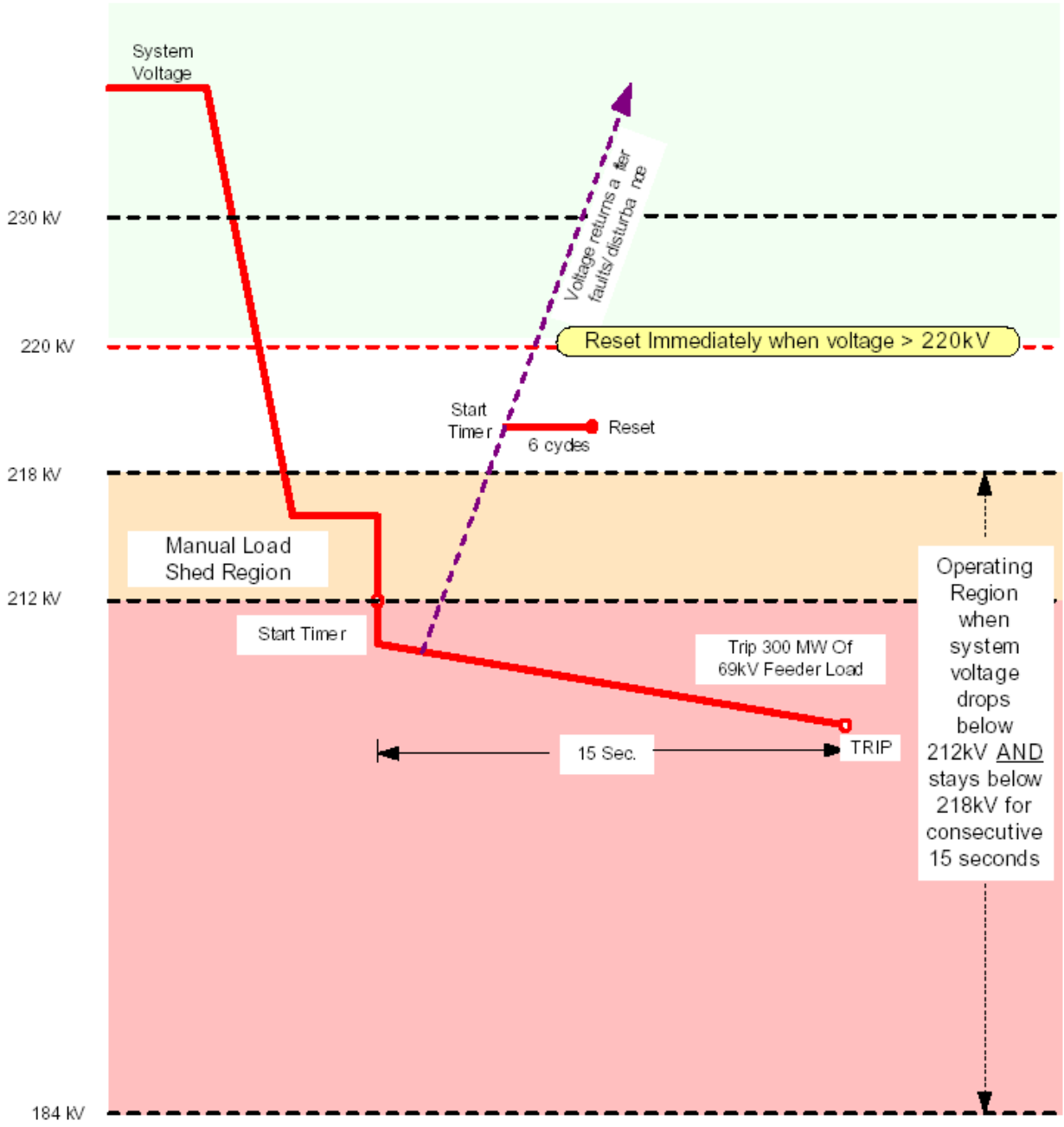

UARP Special Protection System (SPS)

A Special Protection System (SPS) has been installed to eliminate overloads due to high UARP generation levels for loss of double line outages. This scheme monitors the current for the White Rock -Orangevale and Jaybird–White Rock lines. The SPS is normally armed at all times and will runback Camino Generators 1 & 2 and White Rock Generators 1 & 2, as necessary, to mitigate potential thermal overloads on the White Rock-Orangevale and Jaybird–White Rock 230 kV lines, depending on the SPS seasonal setting.

Carmichael Special Protection System (SPS)

The Carmichael-Hurley 230 kV line has two sections: an overhead line section and a pipe-type underground cable section. The 230 kV line is limited by the underground cable section for normal conditions and limited by the overhead section during emergency conditions.

The SPS is to protect the 230 kV line under the following double line outage: the Folsom-Orangevale and Orangevale-White Rock 230 kV lines.

The SPS consists of non-directional overcurrent relays installed at Carmichael that monitor the current through the Carmichael-Hurley 230 kV line. The SPS will be always in service, but deployed only when line ampacity is above the summer emergency rating of 925 Amps (368 MVA).

Appendix 2: Contingency List

The complete Category A, B, C, and D contingency list is available upon request

Appendix 3: NERC/WECC Reliability Standards

SMUD utilizes the NERC/WECC Reliability Standards, the WECC reactive margin criteria and study methodology, and study guidelines unique to the Sacramento Area and SMUD's reliability needs.

NERC/WECC Reliability Standards

The NERC/WECC Reliability Standards state that transmission system performance assessments shall be conducted on an annual basis and that future study years and critical system conditions are studied as deemed appropriate by the responsible entity.

The fundamental purpose of the interconnected transmission system is to move electric power from areas of generation to areas of customer load. The transmission system must be planned, designed, constructed, and operated so that it is capable of reliably performing this function over a wide range of system conditions. The transmission system must be capable of withstanding both common contingencies and the less probable extreme contingencies. The transmission system is planned so that it should be able to operate within thermal, voltage, and stability limits during normal and emergency conditions.

The NERC Reliability Standards define the measures needed to maintain reliability of the interconnected bulk electric systems using the following two terms:

Adequacy - The ability of the electric systems to supply the aggregate electrical demand and energy requirements of their customers at all times, taking into account scheduled and reasonably expected unscheduled outages of system elements.

Security - The ability of the electric system to withstand a sudden disturbance such as an electric short circuit or the unanticipated loss of a system element.

The NERC/WECC Reliability Standards for System Adequacy and Security address these concepts and are summarized in Table A3-1. System performance assessments shall indicate that the system limits are met for all planned facilities in service (Category A), loss of a single element (Category B), loss of two or more elements (Category C), and extreme events resulting in two or more elements removed or cascading out of service (Category D). Extreme contingencies measure the robustness of the transmission system and should be reviewed for reliability and evaluated for risks and consequences.

The ability of the interconnected transmission systems to withstand probable and extreme contingencies must be determined by both Planning and Operating studies. Assessments should also include the effects of existing and planned protection schemes, backup or redundant protection schemes, and control devices to ensure that

protection systems and control devices are sufficient to meet the system performance criteria as defined in Categories C and D of Table A3-1. The transmission system must be capable of meeting Category C and D requirements while accommodating the planned outage of any bulk electric equipment (including protection systems or their components) at all demand levels for which planned outages are performed.

Table A3-1: Transmission System Standards - Normal and Emergency Conditions

Category	Contingencies	System Limits or Impacts		
	Initiating Event(s) and Contingency Element(s)	System Stable and both Thermal and Voltage Limits within Applicable Rating*	Loss of Demand or Curtailed Firm Transfers	Cascading Outages
A. No Contingencies	All Facilities in Service	Yes	No	No
B. Event resulting in the loss of a single element	Single Line Ground (SLG) or 3Phase (3∅Fault, with Normal Clearing: 1. Generator 2. Transmission Circuit 3. Transformer Loss of an Element without a Fault	Yes	No[b]	No
	Single Pole Block, Normal Clearing[e]: 4. Single Pole (dc) Line	Yes	No[b]	No
C Event(s) resulting in the loss of two or more multiple elements.	SLG Fault, with Normal Clearing[e]: 1. Bus Section 2. Breaker(Failure or internal Fault)	Yes	Planned/ Controlled[c]	No
	SLG or 3∅ Fault, with Normal Clearing[e], Manual system Adjustments, followed by another SLG or 3∅ Fault, with Normal Clearing[e]: 3. Category B (B1,B2,B3 or B4) contingency, manual System adjustments, followed by another Category B (B1,B2,B3, or B4) Contingency	Yes	Planned/ Controlled[c]	No
	Bipolar Block, with Normal Clearing[e]: 4. Bipolar (dc) Line Fault (non 3∅), with Normal Clearing[e]: 5. Any tow circuits of a Multiple circuit towerline[f]	Yes	Planned/ Controlled[c]	No
	SLG Fault, with Delayed Clearing[e] (stuck breaker or protection system failure): 6. Generator 7. Transformer 8. Transmission Circuit 9. Bus Section	Yes	Planned/ Controlled[c]	No
D[d] Extreme Event resulting in two or more (multiple elements removed or Cascading out of service.	3∅ Fault, with delayed Clearing[e] (stuck breaker or protection system failure): 1. Generator 2. Transformer 3. Transmission Circuit 4. Bus Section	Evaluate for risks and consequences. • May involve substantial loss of customer Demand and generation in a widespread area or areas. • Portions or all of the interconnected systems may not achieve a new, stable operating point. • Evaluation of these events may require joint studies with neighboring systems.		
	3∅ Fault, with Normal Clearing[e]: 5. Breaker (failure or internal Fault).			

	6. Loss of towerline with three or more circuits 7. All Transmission lines on a common right-of-way 8. Loss of a substation (one voltage plus transformers) 9. Loss of switching station (one voltage level plus transformers) 10. Loss of all generating units at a station 11. Loss of a large Load or major Load center 12. Failure of a fully redundant Special Protection (or remedial action scheme) to operate when required 13. Operation, partial operation, or misoperation of a fully redundant Special Protection System (or Remedial Action Scheme) in a response to an event or abnormal system condition for which it was not intended to operate 14. Impact of severe power swings or oscillations from disturbances in another Regional Reliability Organization.	

a) Applicable rating refers to the applicable Normal and Emergency facility thermal rating or system voltage limit as determined and consistently applied by the system or facility owner. Applicable Ratings may include Emergency ratings applicable for short durations as required to permit operating steps necessary to maintain system control. All Ratings must be established consistent with applicable NERC Reliability Standards addressing Facility Ratings.

b) Planned or controlled interruptions of electric supply to radial customers or some local Network customers connected to or supplied by the Faulted element or by the affected area, may occur in certain areas without impacting the overall reliability of the interconnected transmission systems. To prepare for the next contingency, system adjustments are permitted, including curtailments of contracted Firm (non-recallable reserved) electric power Transfers.

c) Depending on system design and expected system impacts, the controlled interruption of electric supply to Customers (load shedding), the planned removal from service of certain generators, and/or the curtailment of contracted Firm (non-callable reserved) electric power Transfers may be necessary to maintain the overall reliability of the interconnected transmission systems.

d) A number of extreme contingencies that are listed under Category D and judged to be critical by the transmission planning entity(ies) will be selected for evaluation. It is not expected that all possible outages under each listed contingency of Category D will be evaluated.

e) Normal clearing is when the protection system operates as designed and the Fault is cleared in the time normally expected with proper functioning of the installed protection systems. Delayed clearing of a Fault is due to failure of any protection system component such as a relay, circuit breaker, or current transformer, and not because of an intentional design delay.

f) System assessments may exclude these events where multiple circuit towers are used over short distances (e.g., station entrance, river crossings) in accordance with Regional exemptions criteria.

WECC Disturbance Performance and Reactive margin Criteria

The NERC/WECC Reliability Standards discussed in the previous section do not specifically address the criteria or study methodology required to ensure reliability for the more severe contingencies involving transient stability or voltage collapse. As a result, WECC has developed criteria and a methodology for conducting transient and voltage stability studies. The WECC criteria and methodology are aligned with the NERC disturbance categories and specify limits for voltage, frequency, damping, and real/reactive power margins.

Transient stability analysis is typically performed from the initiation of a disturbance to approximately 10 seconds after the disturbance. Voltage stability criteria and real/reactive power margins address the period after transient stability oscillations have damped out and before manual actions to adjust generation or interchange schedules can be implemented. This is typically in the period between 10 seconds to 3 minutes after a disturbance. An area susceptible to voltage collapse can be identified by a power flow contingency analysis. Cases that exhibit large voltage deviations or fail to

converge to a solution are typically at or near a voltage unstable operating point. Note that voltage collapse typically occurs after the VAR capability of the region is depleted.

There are two types of analysis typically conducted to address voltage collapse. These include Power-Voltage (PV) and Voltage-Reactive Power (QV). Both PV and QV analysis should be assessed to determine the reactive margin. Either method may be used for a general voltage stability evaluation, but more detailed studies should demonstrate adequate voltage stability margin for both PV and QV analysis. Sole reliance on either PV or QV analysis is not sufficient to assess voltage stability and the proximity to voltage collapse. The system must be planned and operated to maintain minimum levels of margin. This margin is required to account for uncertainties in data, equipment performance, and differences in the transmission network conditions. In addition, PV and QV analysis can be used to determine the required amounts of undervoltage load shedding and to address the proper combination of static and dynamic reactive power support.

PV Analysis

PV analysis is a study technique that relates voltage at a point in the transmission network to either of the following:

- A load within a defined region, or
- A power transfer across a transmission interface.

The benefit of this methodology is that it provides an indication of the proximity to voltage collapse throughout a range of load levels or power transfers on an interface path. With this technique, the load or transmission interface power transfers are increased and the critical voltage points are recorded at each load level. As the load or power transfers into a region are increased, the voltage profile of the region will become lower until an incremental increase in the load or power transfer causes the voltage to increase rather than decrease. When this occurs, the point of voltage collapse is reached.

The WECC criteria for performing PV analysis are as following:

- 5.0% below the load or interface path flow at the voltage collapse point on the PV curve for Category B disturbances (N-1).
- 2.5% below the load or interface path flow at the voltage collapse point on the PV curve for Category C disturbances (N-2).

QV Analysis

QV analysis is a study technique that relates VAR margin at a point in the transmission network to the voltage at that point in the network. The benefit of this methodology is that it provides an indication of the proximity to voltage collapse due to a shortage of VAR resources at a specific point in the system. With this technique, a fictitious VAR

device is modeled at a critical point in the transmission system. The voltage of this device is set to a desired value, and the VAR output required maintaining this voltage is recorded. As the voltage is decreased, the VAR device must produce more VARs to maintain the desired voltage. The point of voltage collapse is reached when an incremental decrease in voltage also causes a decrease in the VAR output of the device. The output of the VAR device represents the amount of reactive power deficiency at that point of the system. The VAR deficiency at any point in the system must be less than the margin determined from the WECC VQ methodology.

The WECC criteria for performing QV analysis are as following:

- The most reactive deficient bus must have adequate reactive power margin for the most severe Category B disturbance (N-1) to satisfy the following conditions;
    - A 5% increase beyond the maximum forecasted load or interface flows.
- A Category C disturbance (N-2) requires a 2.5% increase beyond the maximum load forecast load or interface flow.

Appendix 4: Steady State Power Flow Plots

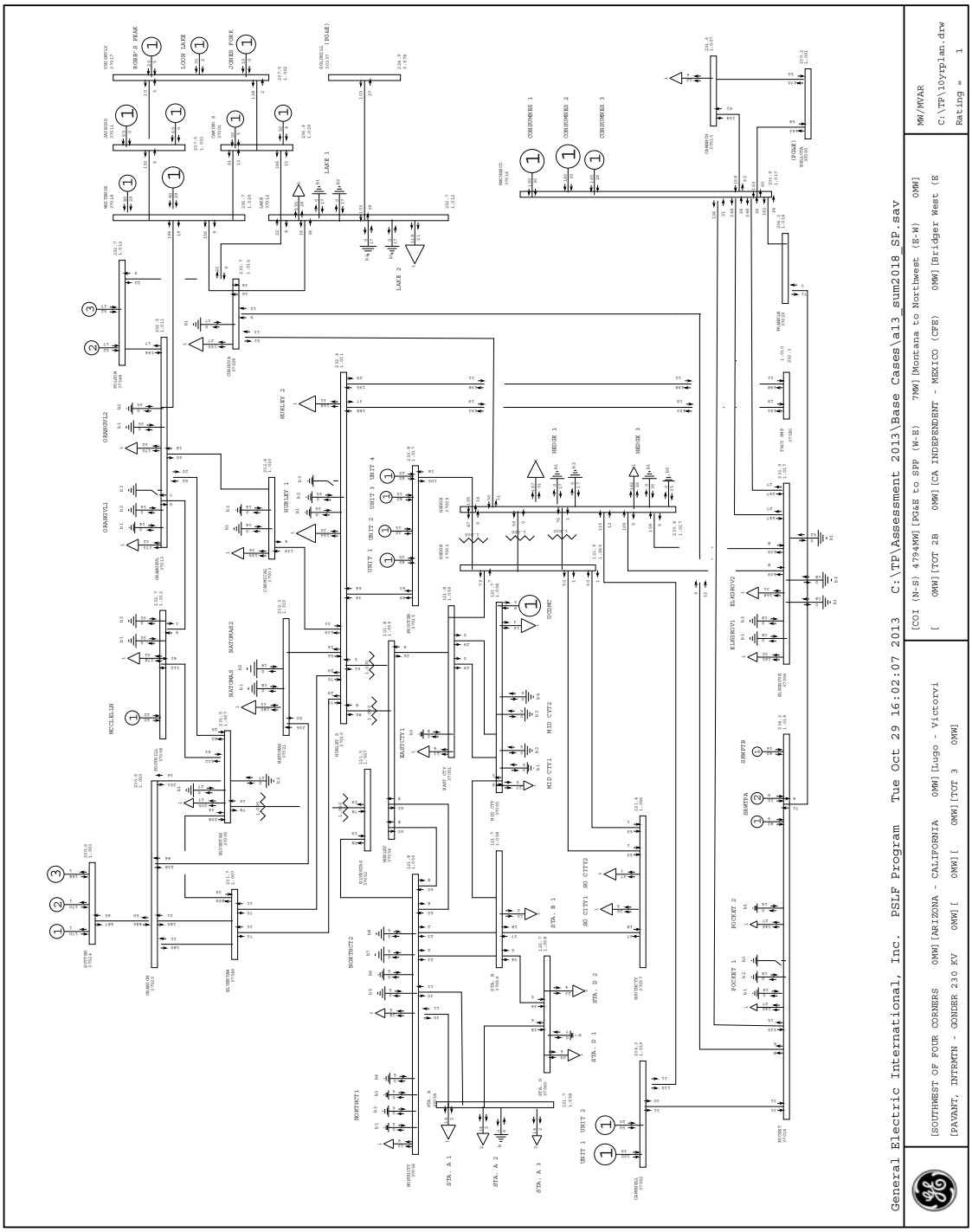

Figure A4-1: Category A (Normal) Summer Peak Condition

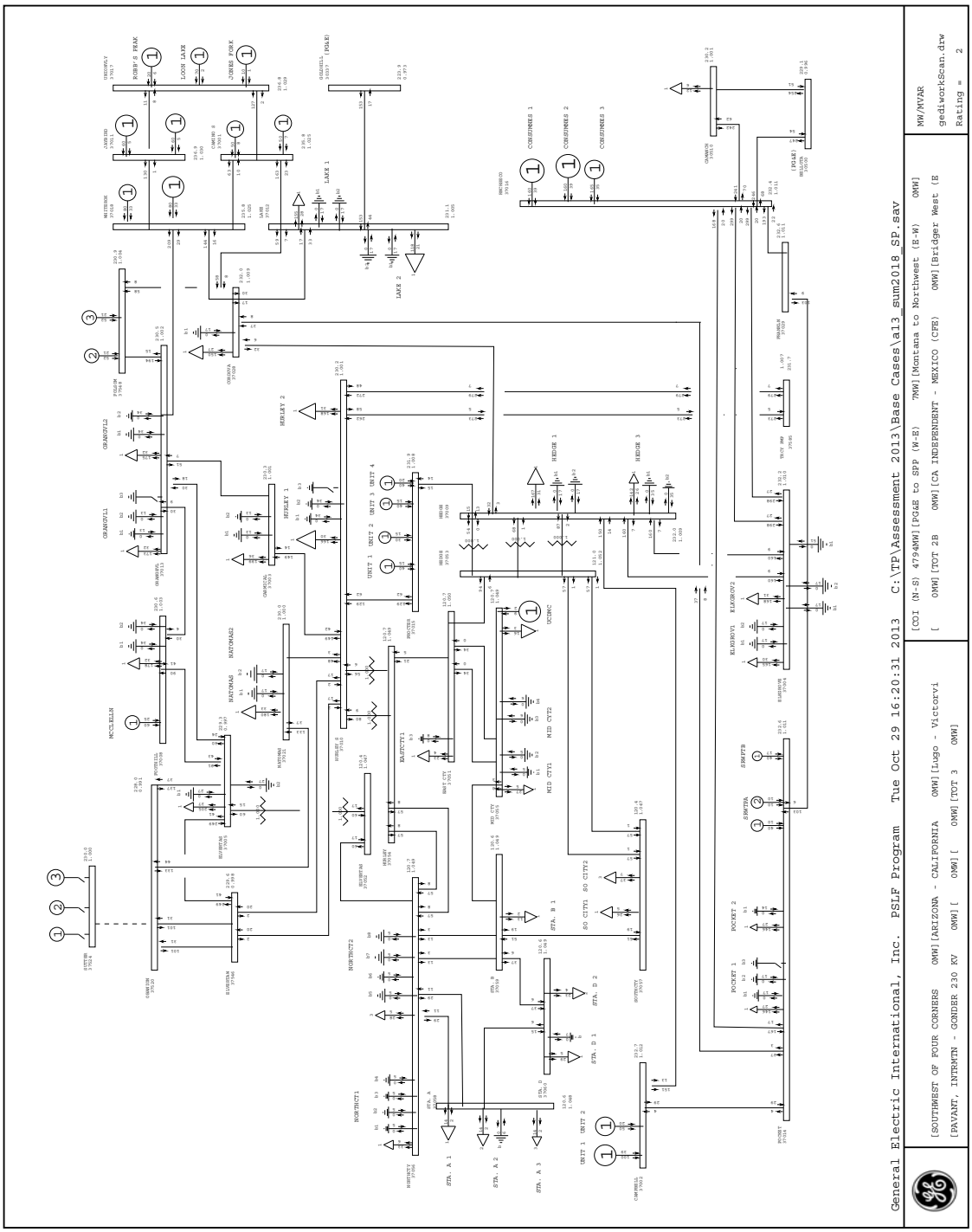

Figure A4-2: Category B (O'Banion-Sutter 230 kV Outage) Summer Peak

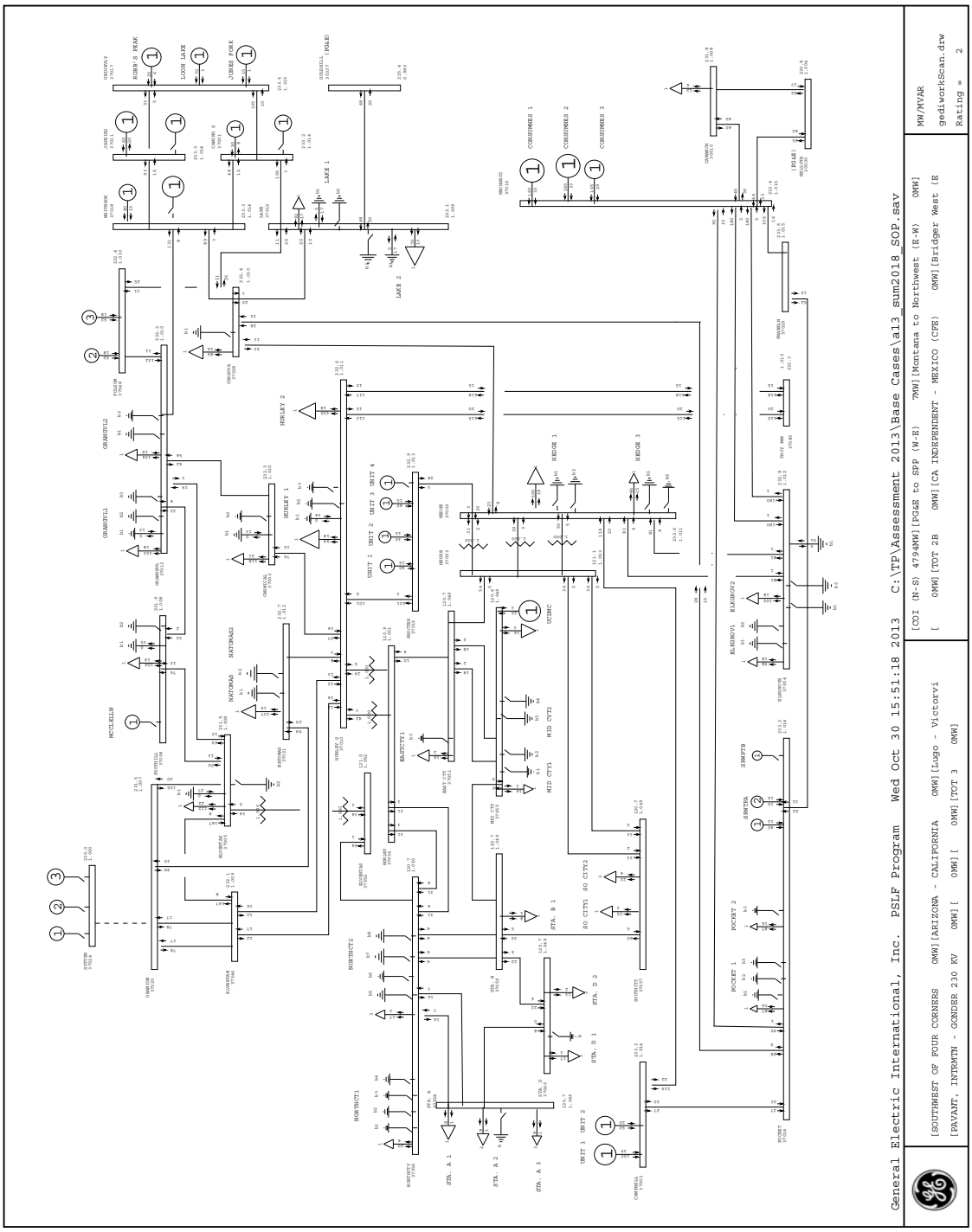

Figure A4-3: Category B (O'Banion-Sutter 230 kV Outage) Summer Off-Peak

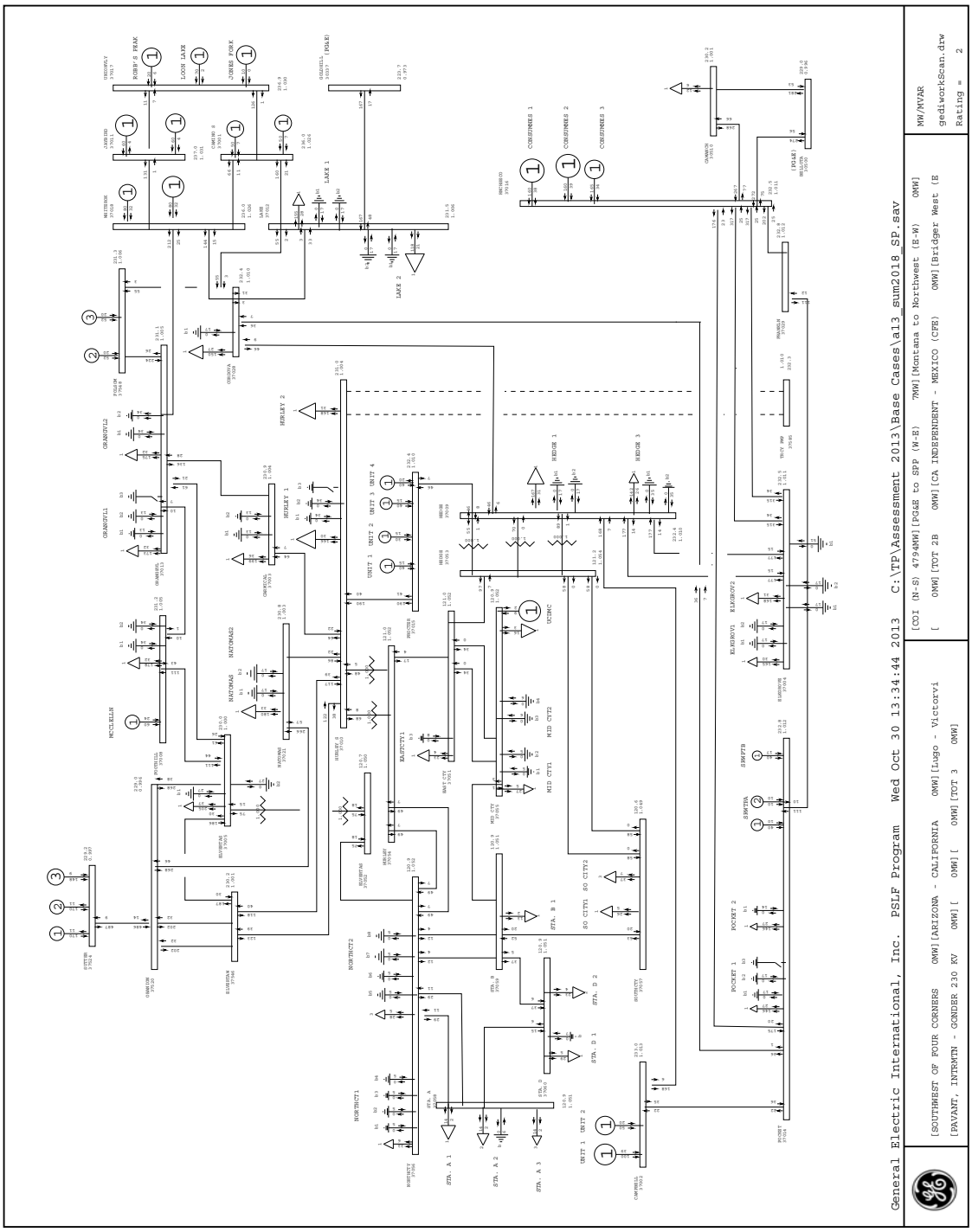

Figure A4-4: Category C (Tracy-Hurley 230 kV #1 and #2 Outage) Summer Peak

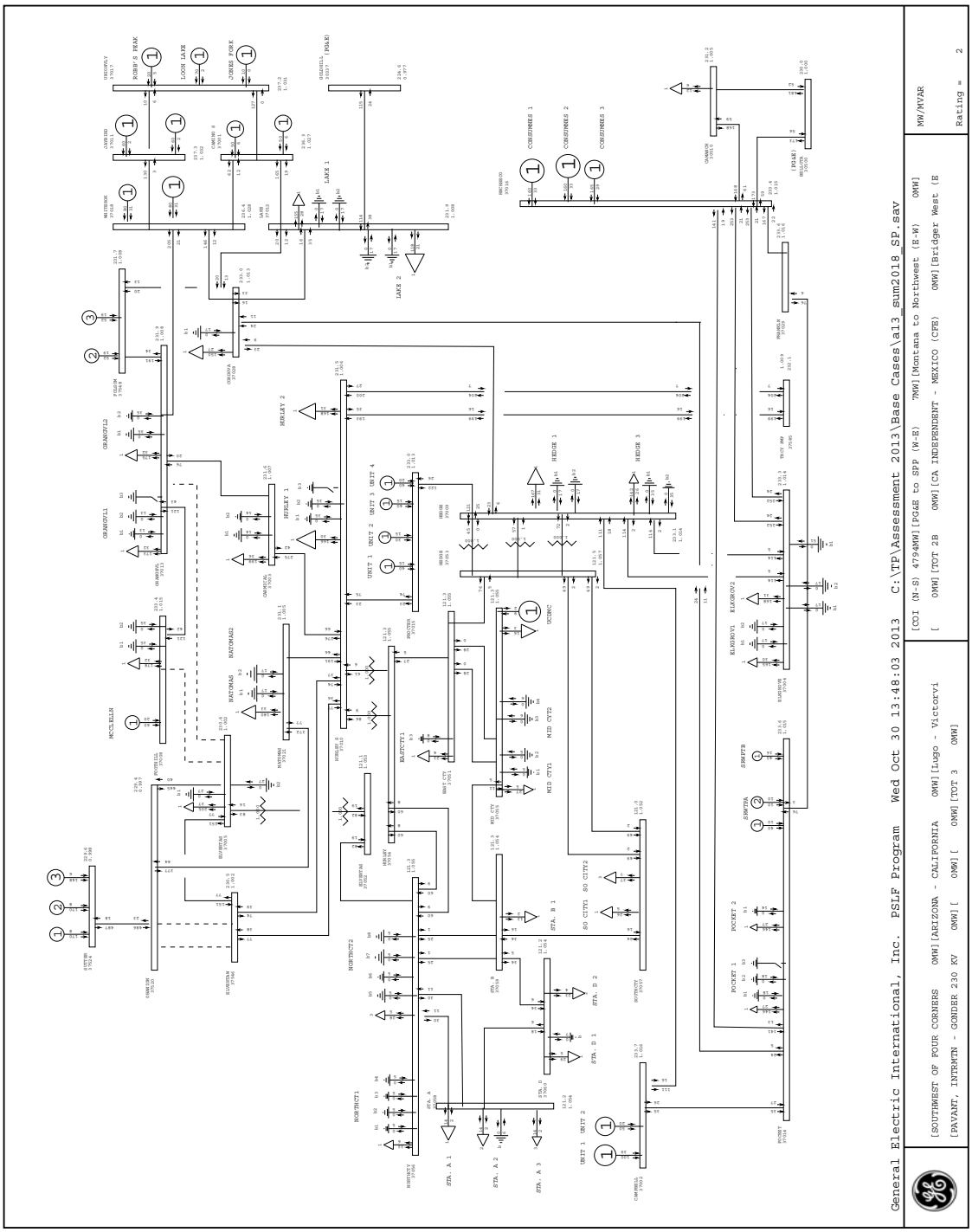

Figure A4-5: Category D (Elverta-Orangevale 230 kV Corridor Outage) Summer Peak

Appendix 5: Dynamic Stability Plots

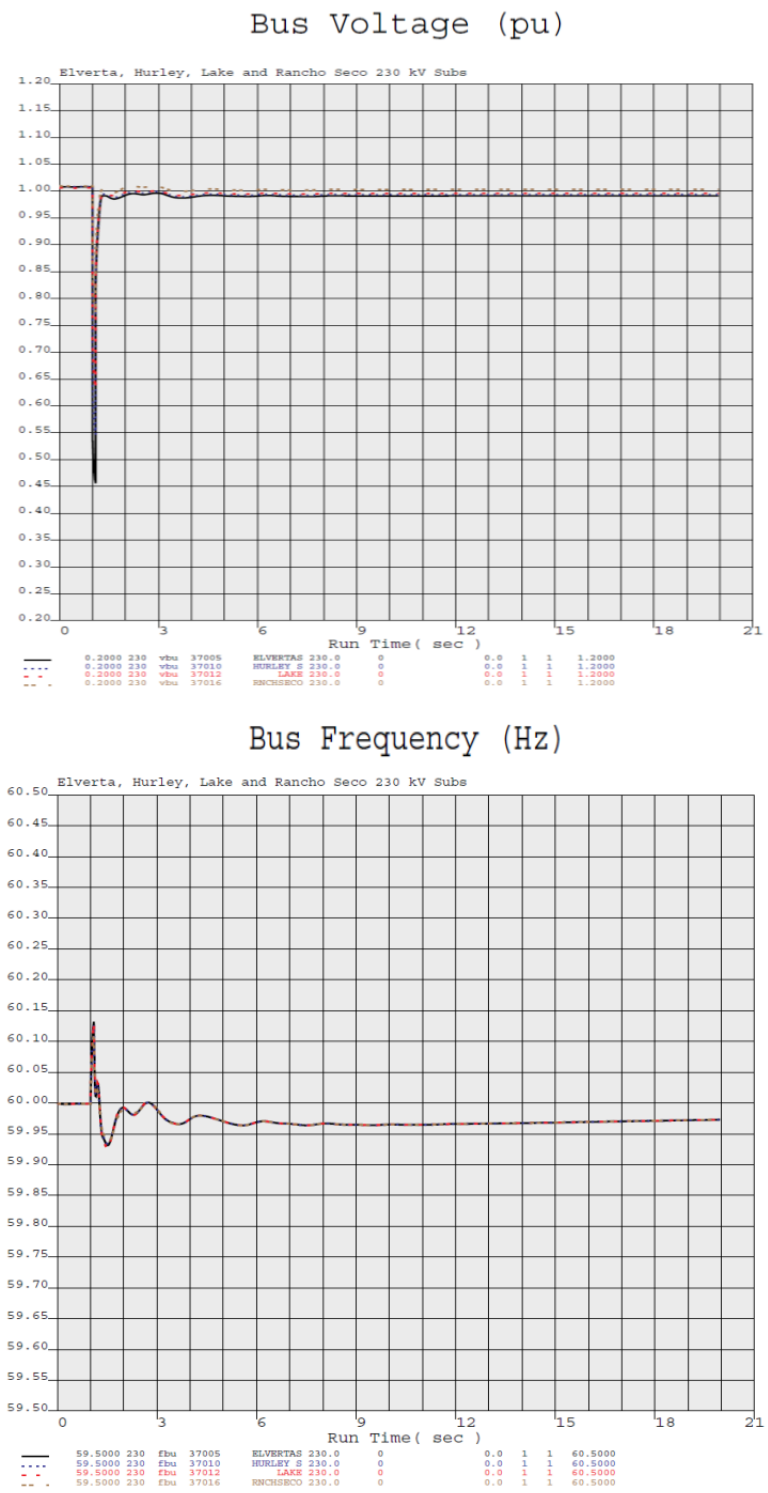

Figure A5-1: Category B (O'Banion–Sutter 230 kV Outage) Summer Peak

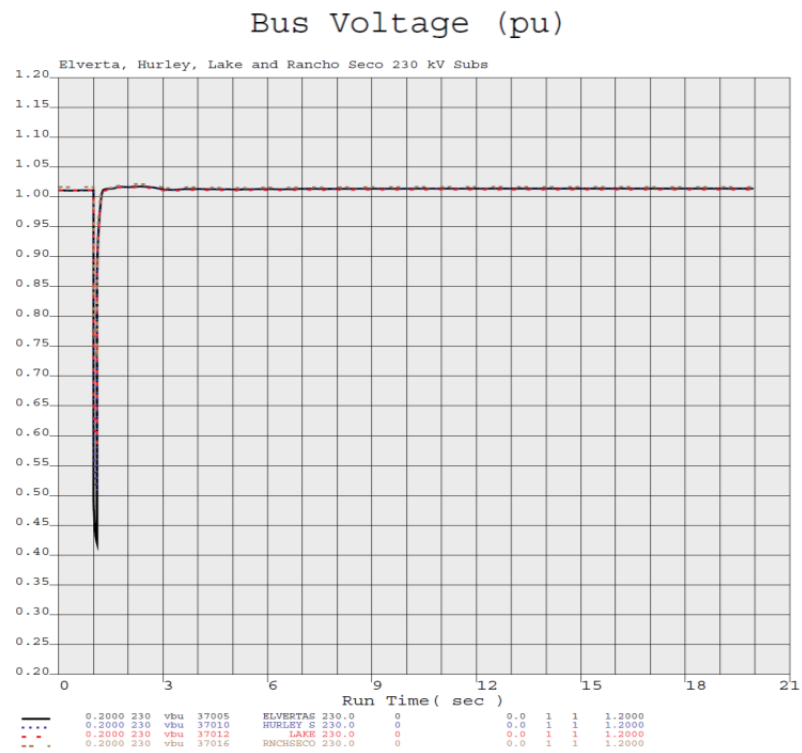

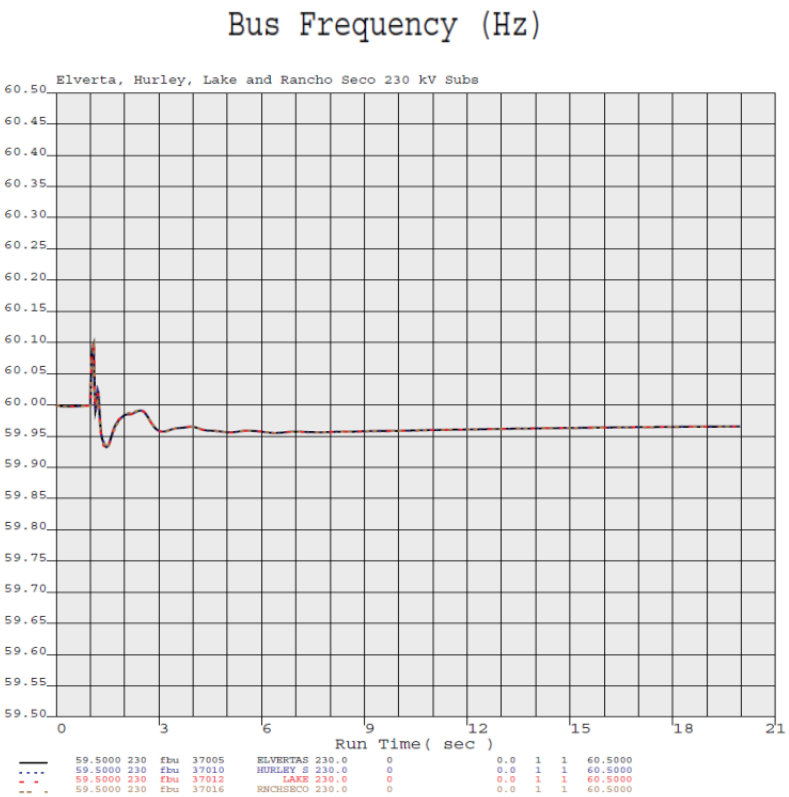

Figure A5-2: Category B (O'Banion–Sutter 230 kV Outage) Summer Off-Peak

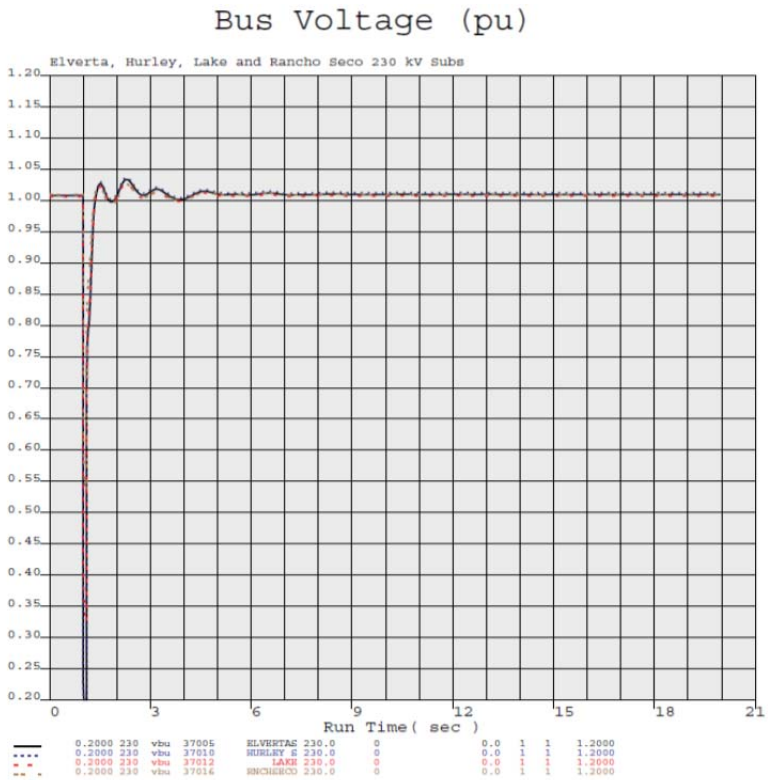

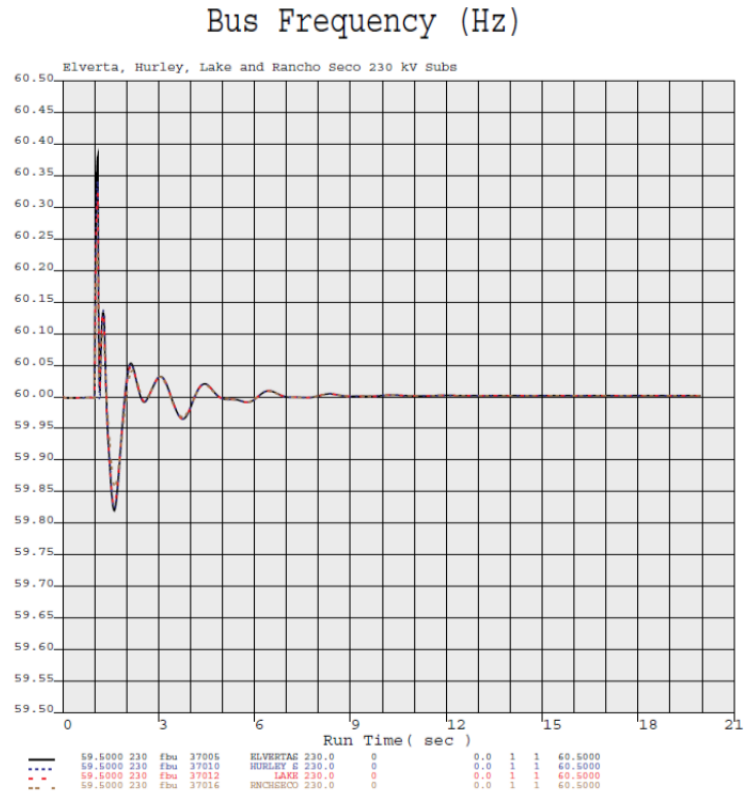

Figure A5-3: Category C (Tracy-Hurley 230 kV #1 and #2 Outage) Summer Peak

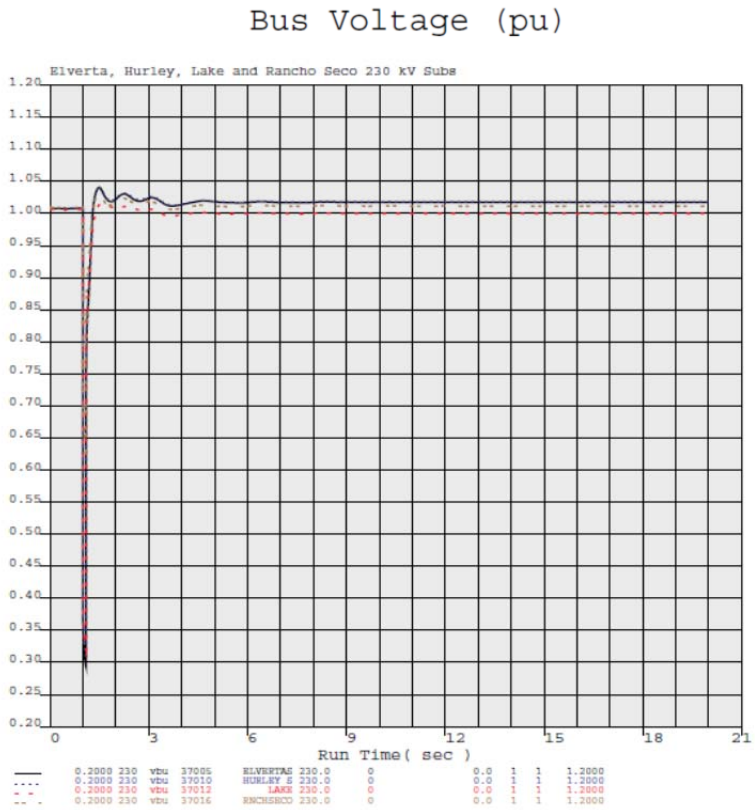

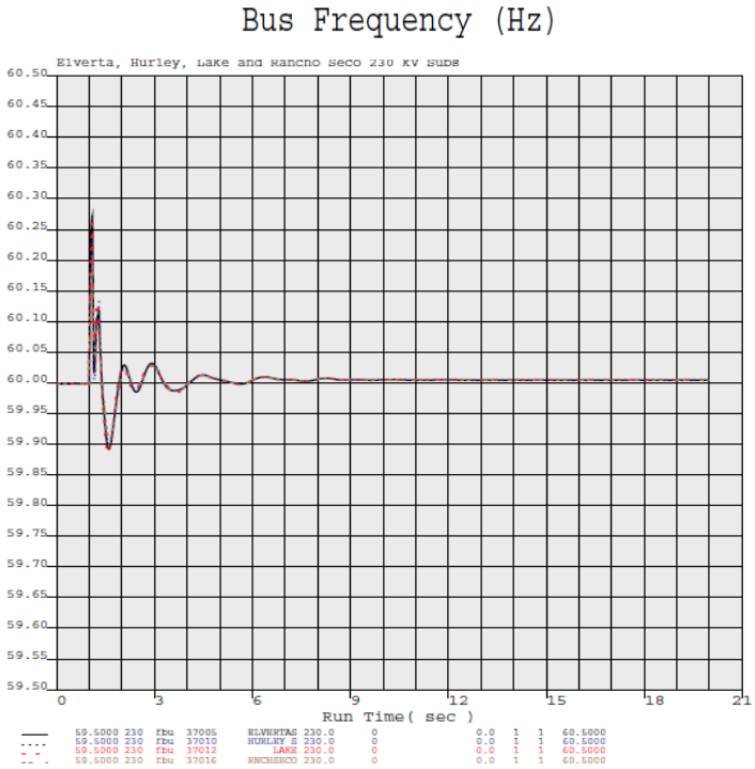

Figure A5-4: Category D (Elverta-Orangevale 230 kV Corridor Outage) Summer Peak