Tri-State Generation and Transmission Association, Inc.

Interconnection Feasibility Study Report

Request Number TI-06-0505

120 MW Wind Generation Facility at Vilas Substation

12 April 2007

Tri-State Power System Planning

Executive Summary

Tri-State Generation and Transmission Association, Inc. ("Tri-State") received a generation interconnection request to determine the feasibility of interconnecting 120 MW of new Customer owned wind turbine generation at Tri-State's Vilas Substation located in Baca County, Colorado. The point of interconnection to the Tri-State transmission system is at the Vilas Substation 115 kV bus. The Customer proposed commercial operation date is December 31, 2007.

The initial request asked for evaluation only under the Network Resource Interconnection Service (NR) designation. Subsequently this was changed to a request for analysis under both the NR and Energy Resource (ER) definition as defined under the Tri-State OASIS tariff[1]. The NR evaluation consisted of a power flow analysis assuming delivery of the full 120 MW of the wind facility to customers in the Denver Metropolitan Area while meeting applicable transmission performance standards and a short circuit analysis. Other projects in Tri-State's OASIS queue, with earlier dates of application were given due consideration in the study. A concurrent similar analysis was conducted to determine the maximum allowable generation for use of the existing system without upgrades for the ER designation.

In both circumstances, it was assumed that Tri-State would make certain system improvements in its transmission system in the Boone-Lamar area independent of the interconnection request. These improvements consist of removing limitations on power flow due to the current transformers used for system protection purposes and placing additional shunt capacitors for voltage regulation purposes on Tri-State's 115 k V system in the area. These adjustments would be done without cost to the Customer.

For system intact conditions and to minimize curtailments of Customer's generation for outages on the existing Boone-Lamar area transmission system, the wind facility could generate up to a 75 MW level without network upgrades. As further discussed in this report, this conclusion assumes a transfer trip scheme is used to remove the wind farm from the system for loss of the Vilas-Lamar 115 kV line. The cost of direct interconnection at Vilas Substation is estimated to be $.94 million.

The Customer also requested an estimate of the cost to connect to Tri-State's Vilas-Lamar 115 kV transmission line at a point four miles north of Vilas Substation. This connection would be in lieu of the connection at Vilas Substation. The estimated cost for a switching station and interconnection at this location is $1.950 million.

[1] Energy Resource Interconnection Service allows for use of the existing firm or non-firm transmission capacity on an as available basis.

Besides the Vilas interconnection proposed by the Customer, the results of this analysis find that to provide transmission service under the NR request designation an additional transmission path between the wind turbine installation of the Customer and Lamar Substation is the minimum feasible requirement. The termination of this additional line could be at other locations east of Lamar as further described in this report but the Lamar connection appears to be the least expensive alternative that meets the minimum system performance criteria.

As further discussed in this report, even with these network upgrades there may be periods of time during the commissioning phase of the first Holcomb Unit in which no transmission capacity is available to the Customer. Whether this limitation occurs is dependent on the amount of transmission completed for the first phase of the Holcomb project prior to initial generation.

The minimum upgrades in the Boone-Lamar area were evaluated to deliver the full 120 MW of generation as an NR request to Midway Substation for delivery to the Colorado Front Range. The total estimated cost of the network upgrades to accommodate the project is approximately $25.44 million in 2008 dollars and includes:

- $.94 million for Customer Interconnection Facilities at Vilas Substation
- $24.50 million for network upgrades consisting of the following:
    - 115 kV switching station at the wind facility for a three breaker ring bus
    - 115kV transmission line from wind facility to Lamar
    - 115 kV line termination at Lamar
    - Acceleration of Lamar 230-115 kV #2 transformer in-service date
    - 15 MVAR of shunt capacitors at Tri-State's La Junta Substation
    - Uprate 10 miles of SECPA's 69 kV line from Vilas to Walsh
    - Uprate 59 Miles of Tri-State's 115 kV line from Willow Creek to La Junta

According to the interconnection request, the Customer would engineer, permit, construct, and finance the 19 mile 115 kV transmission line that will interconnect its facilities to the Tri-State Vilas Substation.

While the above noted cost assumes the minimum system additions attributable to the Customer's request, Tri-State may desire to provide additional capacity or terminate the second line at another location for its purposes.

The existing transmission system in the Boone-Lamar area is shown in Figure 1 of Appendix A. Figure 2 is a one-line diagram of the major existing transmission facilities of Tri-State and Xcel in the Boone-Lamar area. Figure 3 is a one-line diagram of the facilities of Tri-State and SECPA in the Vilas-Lamar-Willow Creek

area. One-line diagrams of the proposed interconnection and network upgrades are shown in Figures 4 through 6. The time required to engineer and construct the interconnection facilities by Tri-State is at least 18 months. The network upgrades will likely take at least 24 months for Tri-State to construct. Permitting and ROW acquisition timeframes are unknown.

Additional details of the studies can be found under the Power Flow Study Results.

Introduction

Tri-State received this large generator interconnection request on May 5, 2006, to interconnect eighty 1.5 MW, GE doubly fed induction generator (DFIG) wind turbines, for a total of 120 MW of generation, with a commercial operation date of December 31, 2007. The proposed wind farm would be located south of Lamar, Colorado and would interconnect into the Tri-State transmission system via a Customer-owned and constructed 19-mile radial 115 kV line terminating at the Tri-State's Vilas Substation. Initially, the Customer requested that this Project be evaluated as a Network Resource (NR) with the output scheduled to the Denver Metropolitan area. By letter dated December 5, 2006, the Customer requested evaluation as both a NR and an Energy Resource (ER) and that the output be scheduled to Shiprock, New Mexico. On March 1, 2007, the Customer requested that the analysis again assume power delivery to the Denver area.

As shown in Figures 2 and 3 of Appendix A, the southeast end of Tri-State's transmission system in the Boone-Lamar area is the 115 kV transmission line between Tri-State's Vilas and Lamar Substations. This transmission line is conductored with 795 MCM ACSR with a conductor thermal rating of 195 MVA. At Lamar Substation, Tri-State owns a fifty percent share of the 230-115 kV, 100 MVA transformer with Xcel which connects to the Lamar-Boone 230 kV transmission line. This 230 kV line is thermally rated for 495 MVA and Tri-State owns 44 percent, *i.e.* 218 MVA, of the thermal capacity of the line. At Lamar Substation, Tri-State also owns the Lamar-Willow Creek-La Junta-Boone 115 kV line that is conductored with 477 MCM ACSR with a thermal rating of 126 MVA based on a maximum conductor temperature of 65 °C. This line is connected to the Boone 230 kV bus through a 230-115 kV, 142 MVA transformer owned by Xcel. Tri-State has capacity rights to fifty percent of this transformer. Tri-State also owns 40 percent, *i.e.* 189 MVA, of the Boone-Midway 230 kV transmission line which has a thermal rating of 472 MVA. All other 230 kV lines terminating at Boone Substation are wholly owned by Xcel. At Midway, numerous transmission paths and connections are available to and through other utilities such as Xcel, Western and CSU.

The reliability of the Boone-Lamar 230 kV and the Lamar-Vilas 115 kV lines has been below average in the past. Based on the last available statistical summary for the Tri-State system during the period of 1994-2003, the Boone-Lamar line had 28 unplanned interruptions which were more than tabulated for any other Tri-State 230 kV transmission line in that period. The Lamar-Vilas was the eighth worst performing 115 kV line with 22 interruptions over the same period.

Figure 7 provides a summary of the expected number of hours that the wind farm of the Customer may face curtailment based upon historical outage data for the limiting transmission elements. The critical limiting transmission elements are as shown on the one-line diagram for the Vilas-Lamar-Boone area. Without

modification of the system shown in the one-line diagram, an output of 120 MW by the wind facility would result in some form of curtailment for an outage of any these elements. For these elements, shown in dark outline, the average number of interruptions (forced outages) per year over the fourteen year historical period of 1993 through 2006 have been calculated and included on the diagram. Also included is the average length of a forced outage as well as the median value for a forced outage over this time period. These outage rates are independent of each other and roughly half typically occur in the summer which is mid-May to mid-September.[2] Typically, these lines are not removed from service for scheduled maintenance so there is no assumed average annual scheduled outage. Occasionally, rarely, a maintenance outage lasting approximately two days could occur.

Tri-State delivers power to its Member system, SECPA and provides Network Service, i.e. wheeling, to ARPA in this area. Transformation from Tri-State's 115 kV system to 69 kV at Willow Creek and Vilas Substation are used to deliver power to these entities. Primarily the Tri-State system in the Boone-Lamar area is a radial feed from Midway which was designed and is used for delivering power to these entities. Tri-State does have the contractual ability with Xcel to schedule power from the Ault, Weld or Story substations through Xcel's transmission system to the 230 kV bus at Xcel's Comanche Station or Boone Substation but this is only in a north to south direction.

Study Scope and Analysis

The Interconnection Feasibility Study identified the transmission requirements, Network Upgrades, necessary to allow the proposed interconnection to the existing Tri-State transmission system as a NR. It consisted of power flow and short circuit analyses. The power flow analysis identified thermal or voltage limit violations resulting from the interconnection, and was also used to determine the generation limit under the ER designation using just the existing transmission system. The short circuit analysis reviewed circuit breaker short circuit capability limits that might be exceeded as a result of the Interconnection and delivery of the proposed generation.

Tri-State adheres to NERC / WECC Reliability Criteria, as well as internal criteria for planning studies. During system intact conditions, criteria are to maintain transmission system bus voltages between 0.95 and 1.05 per-unit of system nominal / normal conditions, and steady state power flows within 1.0 per-unit of all elements thermal (continuous current or MVA) ratings. Operationally, Tri-State tries to maintain a transmission system voltage profile ranging from 1.02 per-unit

[2] Assuming similar historical data for the Boone transformer as that of the Lamar transformer, the cumulative expected number of curtailment hours would be approximately 81 hours with 66 hours due to transformer outages based on the historical average outage length data.

or higher at generation buses, to 1.0 per-unit or higher at transmission load buses.

Following a single contingency element outage, transmission system steady state bus voltages must remain within 0.90 per-unit to 1.10 per-unit, and power flows within the elements continuous thermal ratings. Also, steady state voltages should not deviate by more than 5 percent during a contingency. The power flow modeling was performed assuming load tap changers, phase shifters, and switched shunt devices can operate during contingencies.

Impacts on the neighboring utilities were monitored, and addressed in the course of this study. Should the Customer continue this request and move on to the System Impact Study, all utilities with the potential to be impacted by the project and the proposed upgrades will be notified and invited to participate. For this project, potentially affected parties could include Xcel Energy (PSCo), Aquila (WPE), Arkansas River Power Authority (ARPA), Southeast Colorado Power Association (SECPA), and the Western Area Power Administration (Western/WAPA).

Power Flow Study Models:

Modeling Methodology

The power flow analysis for this study was run utilizing Rev. 30.3 of Siemens/Power Technologies Inc. (PTI)'s Power System Simulator (PSS/E) software package. For the 230 kV system and selected 115 kV transmission lines east of Boone Substation, individual power flow simulations were run to review impacts on the Boone-Lamar area transmission system. A Tri-State in-house IPLAN program known as REGIONOUT was used to drive the PSS/E program for use as a screening tool on each of the modified base cases to identify contingencies in a larger area stretching from Vilas to Colorado Springs and Walsenburg to identify possible impacts on adjacent utilities.[3] REGIONOUT analyzed the system by sequentially taking each transmission line in the voltage class from 69 kV to 230 kV in the selected study area out of service. This was done for the modified base case with and without the Customer wind project. For additional contingencies that did not solve in the REGIONOUT run with the wind project, individual AC power flow solutions were reviewed for the modified base case with the wind project. The output for REGIONOUT was captured in a database for comparison purposes. The results of the simulations are included in this report in a database format in Appendix G.

[3] REGIONOUT functions in a manner similar to the PSS/E activity ACCC which calculates an AC power flow solution for a specified set of contingencies. However, REGIONOUT returns to the original base case prior to solution of the contingency.

Several power flow models were used in the analysis. The power flow study models were created from the existing Western Electricity Coordinating Council (WECC) 2007 Heavy Summer Operating case, the WECC 2006-07 Light Winter Operating case, the WECC 2011 Heavy Summer Planning case and the WECC 2010-11 Light Winter Planning case.

The 2007 cases were used to test the ability of the system to accommodate the proposed generation in the near term with the transmission system as it exists today. The 2011 cases were used to review the impact of the proposed wind farm on the transmission system after the addition of Xcel's Pawnee Unit Three generator and associated transmission upgrades in the Pueblo-Midway area which is currently scheduled to occur by 2010. The 2011 cases were also used as the base case to add the transmission system for generation additions proposed by Tri-State at Holcomb, Kansas for review of the impact of the Customer's proposed generation on that system.[4] Light winter and heavy summer cases were used for both years to review the impact of the Customer's proposed generation on the transmission system in the Boone-Lamar area during times of light and heavy loads.

These WECC power flow cases were modified for certain operating assumptions that were expected to impact the transmission system in the study area within the next few years. For the 2006-07 Light Winter WECC case, the following adjustments were made:

- The Gladstone-Walsenburg 230 kV transmission line and supporting substation facilities was assumed to be in-service.

- The thermal rating for Tri-State's Vilas-Lamar and Lamar-Willow Creek-La Junta-Boone 115 kV lines was assumed to be 120 MVA and 39 MVA for SECPA's Vilas-Walsh-Willow Creek 69 kV line. The two 10 MVAR shunt reactors at Boone were moved from the 115 kV to the 230 kV bus.

- Full generation, with associated transmission, was assumed at the ARPA Lamar Coal Plant Project (39 MW). In addition, the Rocky Ford diesel generation (10 MW) was assumed to be off-line.

- Xcel's Lamar DC Tie was scheduled at 156 MW into the region to model power transfers into the regional transmission system. The existing Colorado Green generation was modeled at an output of 120 MW; slightly

[4] Holcomb Units One and Two are respectively scheduled for commercial operation in the 2012-2013 time frame. No consideration was given to generation at the Lamar Energy Center in this analysis. The earliest in-service data for this generation is 2020 or later which is beyond a typical transmission planning horizon.

less than half of full output such that the total Xcel generation at Lamar did not exceed Xcel's ownership rights in the Boone-Lamar 230 kV line.

- ARPA wind generation at Lamar (6 MW) and Springfield (1.5 MW), was assumed to be on in the cases. Other generation in the Boone-Lamar area was assumed to be off-line.

- The proposed generation was scheduled to peaking units located in and around Denver for NR analysis.

Similar adjustments were made to the 2007 Heavy Summer WECC case and both 2011 cases except the Gladstone-Walsenburg system was included in those cases.

The 2011 cases were modified to include the Holcomb Generation Project through various stages from start-up testing through full operation of both 700 MW (net) units and the transmission system associated with it, i.e. also known as the Eastern Plains Transmission Project (EPTP), to gauge any limitations in the Lamar area due to the first two phases of that generation project.

Consideration of the generation at Lamar for ARPA and the generation for the Holcomb plant is appropriate in this analysis as these projects have a higher position in the Tri-State OASIS queue, even though the in-service date is beyond that requested by the Customer.[5]

Generation at the Colorado Green wind farm south of Lamar was assumed to be 120 MW in all scenarios. Total capability is currently 162 MW with the proposed addition of another 81 MW by 2011. In the 2007 HS case the Xcel system modeled another generator at a location designated as Twin Butte with an output of 8 MW. Xcel's DC tie at Lamar was modeled as being on in the power flow cases with an output of 156 MW directed into the WECC system except for the 2007 HS case when it was modeled at 148 MW to adjust for the Twin Butte generation. Full output for the Lamar DC tie into the WECC system is 210 MW. The DC tie was modeled in this fashion to reflect maximum use of the transmission system. Review of actual data for light load situations generally indicate that the DC tie is either not used or directed out of the WECC system. Xcel's transmission rights on the Boone-Lamar 230 kV transmission line limits its generation schedules out of the Lamar area to 276 MW which is its 56 percent share of the maximum power transfer capability on that line. Other generation exists in the Boone-Lamar area but are primarily small units on cold-standby. These were not included in the analysis.

[5] See http://www.oatioasis.com/TSGT/TSGTdocs/INTERCONNECTION_REQUEST_FORM_3-27-2007.pdf and http://www.oatioasis.com/TSGT/TSGTdocs/TRANSMISSION_SERVICE_FORM_1-26-2006.pdf

The Tri-State 115 kV system in the area was modeled in the power flows assuming that the conductor thermal capability of the Vilas-Lamar and Lamar-Willow Creek-La Junta-Boone was the limiting factor for those transmission lines. However, investigation as to whether there were any other limiting factors has found that certain current transformers (CTs) installed in the substations on these lines are set at values limiting the power transfer capability to less than the conductor rating as shown in Figure 8 in Appendix A. Some of these CTs are currently set with ratios of 200:5 or 300:5. At this time, assuming the thermal rating factor for the existing CTs is 1.5; the maximum thermal ratings on these lines are 90 MVA from Vilas-Lamar, 90 MVA from Lamar to Willow Creek, 60 MVA from Willow Creek to La Junta and 60 MVA from La Junta to Boone.[6] Tri-State believes that these CTs can easily be reset with 600:5 or higher settings or replaced with CTs having that capability. This would provide a line rating of at least 120 MVA for the aforementioned transmission lines. Further analysis and CT replacement would be necessary so that the line rating would be limited only by the conductor rating. Resetting or replacement of the CTs would be an internal expense of Tri-State.

To gauge the impact in the Boone-Lamar area from the initial start up through full operation of the proposed Holcomb Project, the 2011 power flow cases were modified in steps to include the Holcomb generators and the required transmission lines for the EPTP. For unit commissioning purposes, the only lines that have been predetermined to be in-service before the first unit at Holcomb can generate is the Lamar Energy Center to Holcomb 500 kV and the two Lamar Energy Center to Lamar 230 kV transmission lines along with line reactors and the associated 500-230 kV transformers at the Lamar Energy Center.[7] Specific facilities at Lamar Substation deemed necessary for this initial phase of the EPTP are a second 230-115 kV transformer and a 60 MVAR capacitor bank at Lamar. This configuration has assumed to be adequate to support 250 to 300 MW of net generation from Holcomb during the testing process. To compensate for this additional generation in the power flow case, generation at Tri-State resources in eastern and western Colorado were proportionally reduced.

[6] To avoid saturation of metering and relay instruments, the maximum power capacity of these lines is about two-thirds of these values.
[7] The Lamar Energy Center is assumed to be located approximately 20 miles from Tri-State's existing Lamar Substation as shown in Figure 9 of Appendix A.

Minimum Holcomb Start-Up System

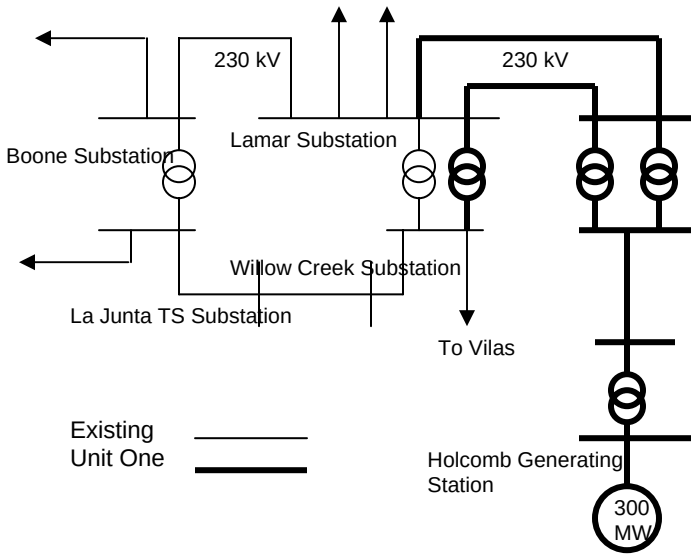

Although the single 500 kV line between the Lamar Energy Center and Holcomb has been identified as the minimum requirement for commissioning purposes, it is more likely that the transmission system in place before any generation occurs would include another 500 kV line to Burlington from Holcomb and a 500 kV line between Burlington and Big Sandy Substation. Associated with these lines would be two 500-230 kV transformers at Burlington Substation and at least one 500-230 kV transformer at Big Sandy Substation.

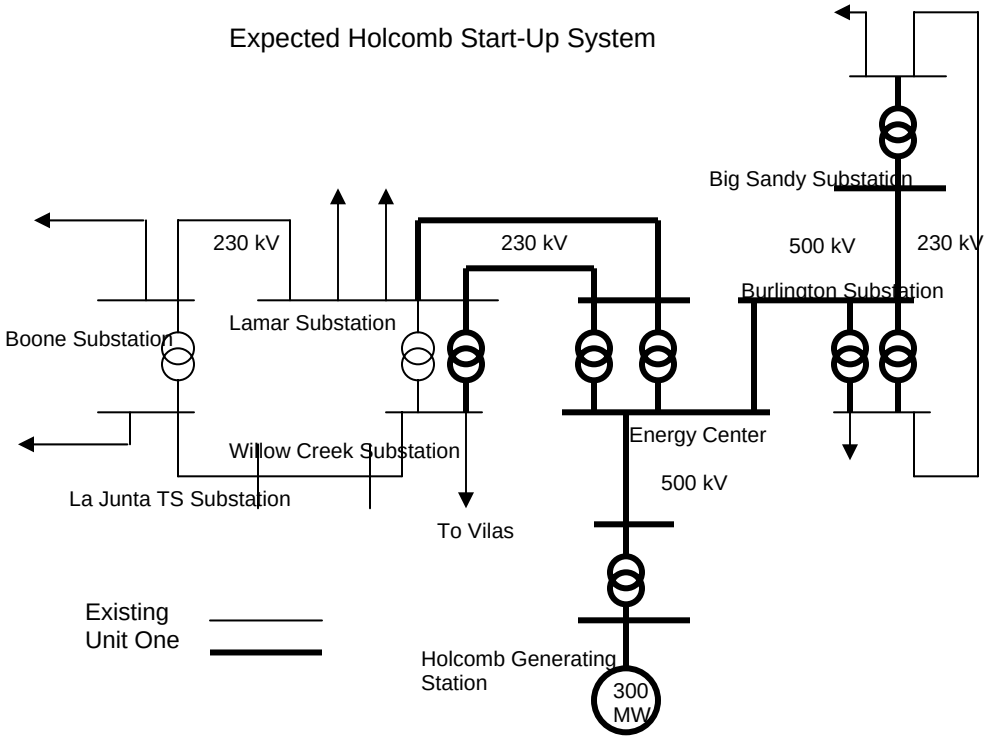

Next the initial phase of the EPTP transmission system likely to be required for full operation of a new generation source of 700 MW net was modeled. This consisted of the addition to the previously described expected Holcomb Start-up system of a 500 kV line between Lamar and Boone Substations with 500-230 kV transformers at Boone Substation and a 500 kV line between the Lamar Energy Center and Burlington Substations. As shown on page two of Figure 9 of Appendix A, this additional increment is an option but may be required for stability purposes. Finally, the expected EPTP transmission system necessary to support 1400 MW of net generation at Holcomb was modeled. This consisted of the addition of a 500 kV line between Boone and Midway Substations with 500-230 kV transformers at Midway Substation. Additional load was added to the 230 kV bus at Big Sandy and Midway Substation to compensate for the second 700 MW generation addition to the 2011 power flow cases.

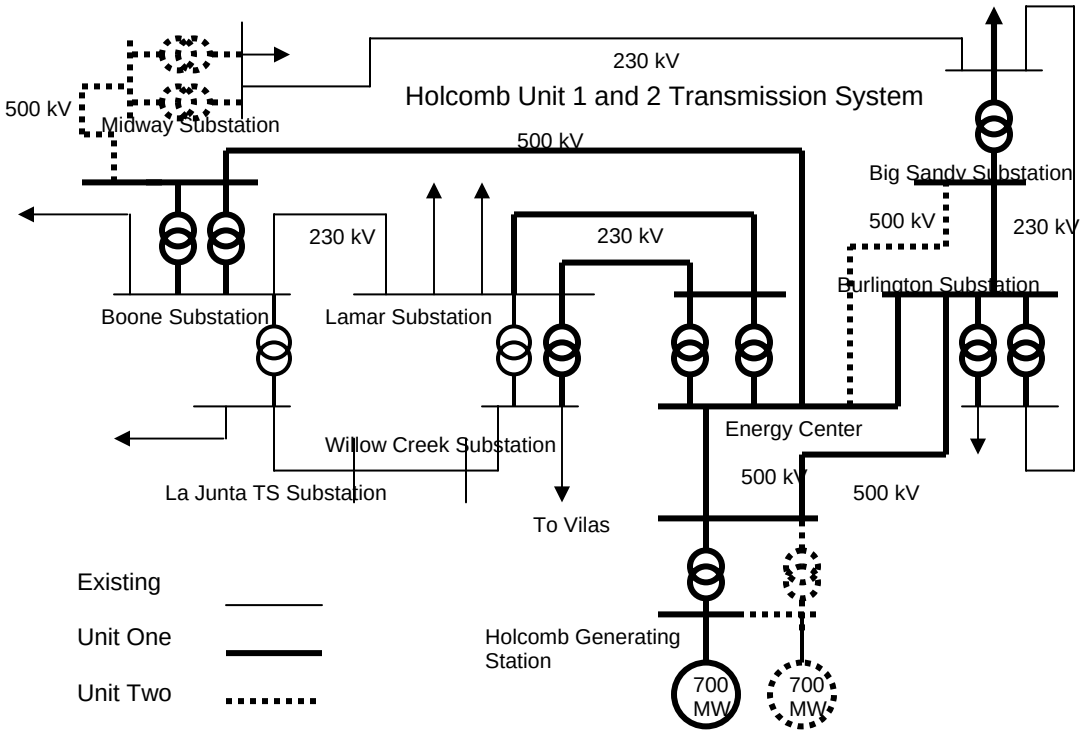

The proposed 120 MW wind project was modeled in its entirety in the power flows. This consisted of 80 1.5 MW conventional generators (120 MW total) with a 0.95 pu lag power factor and a 0.9 pu lead power factor (+.49/-.73 MVAR) to simulate the VAR capabilities of the generators (39/-58 MVAR total). The generator model was based on the assumption that General Electric (GE) 1.5 MW DFIG turbines with power factor and voltage control capability will be used as was stated in the Customer request. The .6-34.5 kV step-up transformers for the individual generators, the 34.5 kV distribution and feeder lines as well as the 34.5-115 kV power transformer at the wind farm substation were also modeled based on the data provided by the Customer for the project. This modeling is shown in Figures 10-14 of Appendix A. To ensure adequate voltage at the wind farm 115 kV bus, the generators were assumed to regulate to a voltage of 1.03 per unit at the 34.5 kV bus of the wind farm 34.5-115 kV transformer.

The Customer indicated the wind project would need a 19 mile long 115 kV line to tie the wind project to Vilas Substation. However, additional information on the type of structure or conductor was not supplied. For purposes of the analysis, Tri-State assumed that the line was typical H-frame construction with a single 477 MCM ACSR conductor per phase for a 140 MVA thermal rating. This was assumed to be the minimal viable line design for the wind farm.

Review of Power Flow Load Data

Tri-State load data for SECPA at the load buses in the Boone-Lamar-Vilas area in the WECC power flow cases was reviewed to determine consistency with recent system demand projections and actual historical data. Table 1 in Appendix B tabulates Tri-State's 2004 load forecast for SECPA and wheeling deliveries to ARPA from Tri-State facilities in the area. This data is then allocated among the power flow buses as is typically done for WECC data submittals and compared to the load bus data in the WECC power flows.

Overall, as shown on page 1 of Table 1 in Appendix B, it was found that power flow bus loads for the 2007 heavy summer case were too high and those for the 2011 heavy summer case were similar to the forecasted load for SECPA delivery points. Adjustments were made to direct and wheeling loads served by SECPA delivery points so that the total SECPA delivered load modeled in the power flows for the summer cases was 75MW in 2007 and 76.5 MW in 2011.

In terms of historical data, SCADA information was compared to the forecast and recent historical data in Table 1. Figure 1 of Appendix B is the actual load net of any generation on the 115 kV system east of Boone Substation as measured on Tri-State's Boone-La Junta 115 kV line and on the 230-115 kV transformer at Lamar. Generally, this indicates a summer peak load of 80 MW, including losses, in the area with a peak load of over 90 MW. During the winter, the typical peak daily load is about 40 MW and the minimum is typically in the range of 22 to 25 MW. As shown on pages 1 and 2 of Table 1, the Total SECPA and ARPA Lamar Area load for 2006 compares reasonably well to these values. For the Vilas-Willow Creek 69 kV line load shown in Figure 2, the data for the row entitled 'Net Vilas and Willow Creek" in Table 1 provides a reasonably comparable estimate of this value from the SECPA forecast data. Figure 2 of Appendix B is the actual net load requirement on the 69 kV system between Willow Creek and Vilas Substation as measured on SECPA's Willow Creek-Holly/Walsh 69 kV line, i.e. Willow Creek Circuit Breaker 552, and Tri-State's 115-69 kV transformer at Vilas. This data indicates a summer peak load of about 28 MW with a peak load of about 30 MW. During the winter the peak load on this 69 kV line is about 12 MW with a minimum of about 5 to 7.5 MW.

As shown in Figure 1 of Appendix B, the winter load of about 40 MW is the maximum expected to occur for about seventy percent of the hours of the year with the average daily load being about 30 MW and the minimum being about 25 MW. This peak value of 40 MW compares reasonably well with the forecasted maximum loads shown on page two of Table 1 of Appendix B. The loads tabulated from the WECC light winter cases for 2006-07 and 2011-12 were higher than this value. As the power flow cases used in this study were for light winter loading and to determine the most severe load conditions for evaluation of

the Customer's proposed generation, the WECC light winter base case loads were adjusted. In terms of the power flow cases used in this study, the 2006-07 winter case loads for the SECPA delivery points were adjusted to 25 MW and those for the 2011-12 were adjusted to 25.6 MW.

Power Flow Case Naming Convention

The naming convention used in this report for individual power flow cases is that the first four to six letters denote the year and the season of the modeled case, i.e. 06-07 lw or 11hs. The next letter indicates whether the case was run without (A) or with (B) the wind farm. Some cases in the report have a different designation such as C or D for this letter. These are variations of the B series. For example, C would denote cases run with only 100 MW of output from the wind farm and D would be for a 75 MW output level. Some of the cases are B cases with an additional transmission line in the area to provide for the wind farm generation. Examples would be the F and G series cases. Designations of an additional letter(s) with the B series cases such as H, HF or H2F indicate comparisons of the impact of the wind farm on the various phases of the 500 kV system for the 2011 cases. The letter H designates Holcomb start-up cases; HF implies full output from Holcomb Unit 1 and H2F implies full output from the first two Holcomb units. The next letter indicates the run sequence for the cases. Generally the designation of 1 is the WECC base case and 2 is the modified base case used in the power flow simulations. Subsequent numbers indicate various n-1 contingencies.

Power Flow Study Results and Conclusions

Energy Resource (ER) Study Conclusions:

With the network improvements by Tri-State of revising the CT settings for its 115 kV relaying system and adding shunt capacitors on the Willow Creek-La Junta 115 kV system as described in this report, the studies show that there is sufficient capacity in the Tri-State transmission system in the region to accommodate energy from a 75 MW project for system intact and all local single contingency outages in the Boone-Lamar area. The only exception to this is the loss of the Midway-Boone 230 kV line which severs the ownership path of Tri-State from the Lamar area to Midway but produces no physical system performance problems.

This assessment does assume that the 115 kV transmission line from Vilas to Lamar Substation is viewed as a radial 115 kV line without support from SECPA's parallel 69 kV line. A transfer trip scheme will be employed for the wind facility for loss of the Lama-Vilas 115 kV line to avoid overloading the

SECPA 69 kV system if the Customer decides to only pursue the ER designation. Otherwise, the maximum generation capacity for the wind facility under the ER designation is slightly less than 40 MW.

Network Resource (NR) Study Conclusions:

With the required network additions described in the following paragraphs, the study showed that with certain network upgrades there is sufficient transmission capacity in the Tri-State transmission system in the region to accommodate a 120 MW project on a firm basis for system intact and all local single contingency outages in the Boone-Lamar area. The only exception to this is the loss of the Midway-Boone 230 kV which severs the ownership path of Tri-State from the Lamar area to Midway but this produces no physical system performance problems.

At a minimum such network upgrades include a new 115 kV transmission line from the wind farm to Lamar with the associated substation facilities, 15 MVArs of additional shunt capacitors, uprating of Tri-State's Willow Creek Substation to La Junta Substation 115 kV line, and uprating of SECPA's Vilas Substation to Walsh Substation 69 kV line. Connection of a second line between the wind farm and substations west of Lamar appear to provide better performance for the Tri-State system but are more expensive.

Modeling of Tri-State's Holcomb Generation Project was included in this analysis. Only for commissioning purposes of the first unit at Holcomb does it appear that this may possibly impact the Customer's proposed project. This is dependent upon the transmission constructed by that time for the Holcomb project.

Power Flow Results

Base Case

The 2006-07 and 2011-12 light winter, 2007 and 2011 heavy summer, WECC power flows were modified as previously described and compared with and without the 120 MW wind farm to evaluate impacts on the transmission system east of Boone. The summer power flow cases were also used with the previously described REGIONOUT driver for PSS/E to review impacts over a larger area extending from Lamar to Colorado Springs and Walsenburg. The summer cases were chosen for the large area analysis because the higher summer loads in the area would provide more stress to the large area system when evaluating the Customer's proposed generation.

For the 2006-07 light winter adjusted base case, there were no performance criteria violations for this case or the specific single contingency outages on the transmission system east of Boone reviewed in the study, *i.e.* cases 06-07 lw A2 through 10. With the addition of the 120 MW wind farm to the adjusted base case, i.e. case 06-07 lw B2, the power flow on the Lamar-Vilas 115 kV line and the Lamar 230-115 kV transformer is reversed. Comparison of the adjusted 2006-07 light winter base cases finds that of the 114 MW of generation that reaches the Vilas 115 kV bus, approximately 93 MW flows on the 115 kV line to Lamar and 21 MWs on SECPA's 69 kV system. Of the amount directed into Lamar, roughly 81 MWs flows onto the 230 kV system at Lamar with 7 MW flowing on the Lamar-Willow Creek 115 kV line. Comparing voltage levels for the base case with and without the wind farm, finds a 3.9 percent drop on the La Junta Tri-State 115 kV bus to a level of .966 pu. Comparing Case 06-07 lw A2 to Case 06-07 lw B2 also finds the power angle difference between the Vilas 115 kV bus and the Boone 115 kV bus to increase from 18 to 56 degrees. Similar results for the Boone-Lamar area are seen for a comparison of the 2011-12 lw base case with and without the wind farm.

Results for comparison of the 2007 and 2011 heavy summer adjusted base cases with and without the wind farm were also similar to the preceding description for the light winter cases. Because of the heavier loads modeled in the Boone-Lamar area, voltages were slightly more depressed with a 4.8 percent voltage drop to .957 per unit for case 07 hs B2 compared to 07 hs A2. In the 2007 heavy summer cases, the power angle difference between the Vilas 115 kV bus and the Boone 115 kV bus is less than for the light winter cases but still increases from 14 to 51 degrees when the 120 MW wind farm is included.

Addition of the minimal EPTP system necessary for start up power for the Holcomb generator in the 2011-12 LW and 2011 HS base cases found that approximately 83 percent of assumed 250 MW net output would flow over the Boone-Lamar 230 kV line with the rest flowing on the Lamar-Willow Creek-Boone 115 kV line, e.g. case 11 lw A2 compared to 11 lw AH3. For these cases, the voltage at Tri-State's La Junta Substation declined at least five percent under system intact conditions as well as utilizing fully Tri-State's share of the Boone-Lamar 230 kV line. If the Customer's proposed 120 MW wind farm is included in the minimum EPTP system base case, the maximum output of the Holcomb generator is limited to 185 MWs of net output for the light load scenario, i.e. case 11-12 lw BH3 or 100 MWs in the heavy load scenario, i.e. case 11 hs BH3. Overall, the results shown in these cases indicate that the minimal EPTP system provides insufficient support in the Boone-Lamar area to provide a transmission path for the wind farm of the Customer plus all generation and the DC Tie injection into the area as well as the Holcomb start up power. Start-up testing of the Holcomb units would likely occur over a period of several months beginning in the spring of 2011. While the likelihood of the simultaneous export of this

much power from this area occurring may be questionable, addition of the wind farm of the

Customer to the system would potentially limit the ability of projects with higher positions in Tri-State's OASIS queue to operate.

As in-service dates for the transmission lines associated with the first phase of the EPTP are expected to sequentially occur within a month or two of the previous completed line, a more likely transmission scenario for start-up power testing of the first Holcomb unit would include the previously described minimum system and the addition of a 500 kV transmission line between Holcomb and Tri-State's Burlington Substation and from Burlington to Tri-State's Big Sandy Substation with installation of 500-230 kV transformers at these substations. In this instance, flow into the Boone-Lamar area from a net Holcomb output of 250 MW is reduced to 60 MW for the heavy loading scenario, case 11 hs BH4 or 95 MW for the light load conditions, case 11-12 lw BH4 and system intact conditions with the 120 MW wind farm are acceptable.

The rest of the first phase of the EPTP contemplated by the time of commercial operation of the Holcomb Unit 1 generator, would consist of additional 500 kV transmission lines between the Lamar Energy Center Substation and Burlington Substation and a 500 kV line between the Lamar Energy Center Substation and Boone Substation with 500-230 kV transformers installed at Boone Substation. This system is expected to be adequate to meet contingency and stability requirements for the first Holcomb unit. Comparison of cases 11-12 lw AHF2 with 11-12 lw BHF2 or cases 11 hs AHF2 with 11 hs BHF2 indicate that roughly 72 and 45 percent of the wind farm generation flows onto the 500 kV system through Lamar respectively for the light and heavy load scenarios. The difference for the summer case flows through the Boone-Lamar 230 kV line. As shown by the BHF2 cases, system intact conditions with the 120 MW wind farm are acceptable.

The second phase the EPTP required to meet the contingency and stability requirements for commercial operation of the Holcomb Unit 2 generator, would consist of an additional 500 kV transmission lines between the Boone Substation and Midway Substation and a 500 kV line between the Lamar Energy Center Substation and Big Sandy Substation with 500-230 kV transformers installed at Midway Substation. Comparison of cases 11-12 lw A2HF2 with 11-12 lw B2HF2 or cases 11 hs A2HF2 with 11 hs B2HF2 provides similar results as for that found for the first phase of the EPTP.

Base cases were run forming a looped transmission system for the wind farm for purposes of the NR analysis and to determine the extent to which this lessened the impacts of the 120 MW wind farm on the transmission system in the Boone-Lamar area. Case 06-07 lw G2 and 11hs G2 were run with an additional 75 mile

115 kV transmission line from the wind farm to the La Junta Tri-State Substation and a 2 mile long connection between the La Junta substations of Tri-State and

Aquila. Another set of cases, i.e. 11-12 lw F2 and 11 hs F2, were run with an additional 42 mile 115 kV line between the wind farm and Lamar Substation. These lines were assumed to built for eventual operation at 230 kV with 1272 MCM ACSR conductor. Finally, base case 11 hs H2 was run with an additional 115 mile long 230 kV, 1272 MCM ACSR line connecting the wind farm site to Boone Substation.

Base cases were also run with reduced generation levels for the Customer's proposed wind farm. Case 06-07 lw C2 limited the wind farm output to 100 MW. Cases 06-07 lw D2 and 07 hs D2 limited the wind farm output to 75 MW. Comparison of the light load cases to the respective adjusted base case 06-07 lw A2 without the wind farm finds that both are acceptable, with the voltage drop at La Junta Tri-State being 2.8 percent with the 100 MW case and 1.9 percent with the 75 MW case. Subsequent discussion of single contingency results for these two scenarios will find that the 75 MW maximum output for the wind farm output results in no limitations on use of the existing system, thereby qualifying as the ER allowed output.

For the modified base cases with and without the 120 MW wind farm, which were run using PSS/E with the REGIONOUT program, the wide area analysis flagged an overload of the La Junta W (Aquila) 115-69 kV transformer but this is not impacted by inclusion of the wind farm in the base case. No attempt was made to include the EPTP system in the wide area analysis.

Significant Outages East of Boone

Lamar – Boone 230 kV Line

For heavy east to west flows from Lamar for the Xcel system, loss of the Lamar to Boone 230kV line eliminates Xcel's only transmission path to Boone and overloads the remaining Tri-State transmission system. Xcel has implemented operating procedures to alleviate those overloads until additional transmission can be built to Lamar.[8] The current operating procedures for the loss of the Boone to Lamar 230 kV line as well as the Lamar 230-115 kV transformer are:

1. Trip the existing Colorado Green Wind Farm off-line and
2. Shut down power injections from the Lamar HVDC tie.

[8] See Lamar HVDC Tie Operating Guide and Operating Procedures and Practices for Existing and Potential 2003 Least Cost Resource Plan Wind Generation at www.rmao.com/wtpp/PSCO_Operating_Studies.html as well as such prior studies by Xcel in the Lamar area as GI-2004-4 that can be found at www.rmao.com/wtpp/PSCO_Transmission_Studies.html

The individual power flows for this contingency were run assuming implementation of these operating guide lines.[9]

As previously noted, for the 2006-07 light winter adjusted base case, there were no performance criteria violations for the specific single contingency outages on the transmission system east of Boone reviewed in the study, i.e. cases 06-07 lw A2 through 10. For the addition of the 120 MW wind farm to an outage of the Boone-Lamar 230 kV line, as shown by case 06-07 lw B10, this single contingency results in the Tri-State's Willow Creek-La Junta-Boone 115 kV line overloading and the voltage sinks to about .91 per unit at La Junta even with the installation of 60 MVArs of capacitors at Willow Creek and La Junta. A similar situation is found for case 11-12 lw B10a except the voltage at Tri-State's La Junta Substation only declines to .95 per unit with the addition of 52.5 MVArs of capacitors at Willow Creek and La Junta. For the addition of the wind farm to the 2007 heavy load scenario in case 07 hs B10, there are no line overloads but the voltage declines to about .89 per unit at La Junta. As shown in case 07 hs B10a, addition of 22.5 MVArs of shunt capacitors at Willow Creek and La Junta brings the system voltage back to the acceptable level of .963 per unit. Similar results were found for the 2011 heavy load case in but 35 MVArs of capacitors were required to raise the La Junta voltage to the .95 per unit for this outage.

For inclusion of the expected Holcomb start-up system in the case model, this contingency did not cause line overloads but did result in voltage declining to .938 per unit for case 11-12 lw BH10 and to .908 per unit in case 11 hs BH10 at Tri-State's La Junta Substation. Addition of 15 MVArs of capacitors at La Junta did bring the voltage back to .936 per unit for the heavy load scenario. For modeling of either the Holcomb Unit 1 or Unit 1 and 2 transmission systems, this contingency with the 120 MW wind farm did not result in any criteria violations as shown in cases 11-12 lw BHF10, 11-12 lw B2HF10, 11 hs BHF10, or 11 hs B2HF10.

With an additional line between the wind farm and Lamar modeled, for the light load scenario in case 11-12 lw F10a, Tri-State's Willow Creek-La Junta-Boone 115 kV line overloads and the voltage sinks to about .92 per unit at La Junta with the installation of 45 MVArs of capacitors at Willow Creek and La Junta. However, for the addition of the wind farm to the 2011 heavy load scenario in case 11 hs B10, there are no line overloads and no voltage criteria violations.

[9] As stated in the referenced Xcel documents, the DC tie can be ramped down to zero output in 10 cycles. Activation of a transfer tripping scheme for the Colorado Green wind farm is also assumed to occur within that same time frame. For steady state analysis purposes, no power injection into the Lamar area transmission system for either the DC tie or wind farm were assumed in the power flow for this contingency.

Addition of a transmission line between the wind farm and La Junta shows no overloads, with one minor exception, or voltage criteria violations for the light load scenario in case 06-07 lw G10. The exception is the overload of Aquila's Boone-La Junta 115 kV line but it is only rated for 40 MVA in these cases. It is likely this is a CT limitation that can be eliminated with minimal cost. Similar results were found for the heavy load case 11 hs G10 except that the Aquila line was not loaded above its 40 MVA rating.

For the reduced generation cases, output of 100 MWs by the wind farm appears to be acceptable with shunt capacitors installed at Willow Creek and La Junta TS as shown in Case 06-07 lw C10. A reduced output of 75 MWs results in no criteria violations as shown in Case 06-07 lw D10. A similar result was found for the heavy load scenario in case 07 hs D10.

This contingency did not solve for the 2007 heavy summer case without the wind farm which was run using PSS/E with the REGIONOUT program. This was likely due to not eliminating the Colorado Green generation and DC tie injection at Lamar.

Lamar Energy Center – Boone 500 kV Line

Power flow analysis indicates that this line outage has the greatest impact on the transmission capacity in the Boone-Lamar area among possible EPTP system line outages when considering the EPTP system for the Holcomb generating units. For the 700 MW output of the first Holcomb unit with the first phase of the EPTP in place, it appears from case 11-12 lw BHF15 that during light load conditions with the wind farm generation of 120 MW and Xcel's full use of its 276 MW share of the Boone-Lamar 230 kV line no criteria violations occur. Flow on the Boone-Lamar 230 kV line is approximately 339 MVA. Comparison of this case to case 11-12 lw AH15 indicates that approximately 60 percent of the wind farm generation flows onto the 500 kV system and the remainder is split on a 75 to 25 ratio respectively between the 230 and 115 kV system in the area. For the 2011 heavy summer scenario as shown in case 11 hs BHF 15, the results are similar although only slightly more than 50 percent of the wind farm generation flows onto the 500 kV system.

For the full net output of 1400 MWs from both Holcomb units and the second phase of the EPTP system in place, more flow is experienced on the Boone-Lamar area transmission system for this outage. With wind farm generation of 120 MW and Xcel's full use of its 276 MW share of the Boone-Lamar 230 kV line, the results in light load case 11-12 lw B2HF15 find lower voltages with loading of 104 MVA on the Willow Creek-Boone 115 kV line and a flow on the Boone-Lamar

230 kV line of approximately 472 MVA which is very close to the existing 495 MVA thermal rating of this transmission line. The flow on the Boone-Lamar line

is 445 MVA for the equivalent heavy load case shown in 11 hs B2HF15. In comparison, the line flow in case 11 hs A2HF15 without the wind farm is 407 MVA and 88MVA on the Willow Creek-Boone 115 kV line. Based on review of this single contingency, it appears with sufficient installation of capacitor banks that the existing Boone-Lamar transmission system can just accommodate the Customer's proposed wind farm at the 120 MW level as a NR during this outage on the EPTP system. There does not appear to be any additional capacity left in the system during this contingency to serve more than this nominated amount of 120 MW as an NR.

For full output from the Holcomb units with the Phase Two EPTPT system in place, assuming full use of Xcel's share of the Boone-Lamar 230 kV line and 120 MW of output from the Customer's wind farm plus an additional 115 kV line from the wind farm to Lamar with 15 MVAR of capacitors at La Junta TS, an outage on the Lamar Energy Center-Boone 500 kV line places a high flow on the existing Lamar-Boone 230 kV line as shown in case 11 hs F2HF15a. The power flow on the Lamar-Boone 230 kV line is 448 MVA. For an additional 115 kV line between the wind farm and Tri-State's La Junta Substation as shown in case 11 hs G2HF15, the flow on the Lamar Boone line is reduced to 405 MVA. For an additional 230 kV line between the wind farm and Boone Substation as shown in case 11 hs H2HF15, the flow on the Lamar Boone line is reduced but still significant at 382 MVA. This latter case implies that construction of another 230 kV line between the wind farm and Boone Substation would allow a larger amount of generation to be placed by the Customer but the amount may be significantly less than the nominal thermal capacity of the additional 230 kV line.

Lamar 230-115 kV Transformer

Xcel also implements the same operating procedures for loss of the 230-115 kV transformer at Lamar as it does for loss of the Boone-Lamar 230 kV transmission line. The individual power flows for this contingency were run assuming implementation of these operating guide lines.

For modeling the 120 MW wind farm without additional transmission lines, the results in the outage case 06-07 lw B9a were similar to that found for the outage of the Boone-Lamar 230 kV transmission line for case 06-07 lw B10a. For case 11-12 lw B9a it was found that approximately 22.5 MVArs more shunt capacitors were needed for this outage relative to the amount required for the Boone-Lamar transmission line outage. This increased need for capacitor support relative to the Boone-Lamar transmission line outage was also found for the 2007 and 2011 heavy summer load cases. In case 07 hs B9a and for 11 hs B9a an additional 22.5 MVArs was required over that required for the transmission line outage.

This occurs because any voltage support from the 230 kV system is eliminated with the transformer outage. With the first phase of the EPTP a second

transformer is planned for Lamar which would eliminate this single contingency outage as a concern.

Boone 230-115 kV Transformer

For all case without additional transmission lines, the addition of the 120 MW wind farm does not produce thermal overloads of any transmission lines in the Boone-Lamar area for this outage.

For the light load scenario cases 06-07 lw B4 and B4a, it was found that approximately 15 MVAR of capacitors was needed to keep the La Junta Tri-State voltage above .95 per unit with the addition of a 120 MW wind farm. No problem was encountered for this outage during light load conditions without the wind farm. For the heavy load scenario, this outage produced low voltages on the adjacent Tri-State system even without inclusion of the wind farm. Case 07 hs A4a finds that 15 to 22.5 MVArs are needed to keep the voltage at La Junta Tri-State at .95 per unit. Addition of the 120 MW wind farm increases the amount of required capacitors to 45 MVAR as shown in case 07 hs B4 and in case 11 hs B4 this amount is needed to maintain a voltage of .915 per unit at Tri-State La Junta. (This analysis is only focused on correction of the voltages at the Tri-State load buses east of Boone. For impacts unrelated to the wind farm, it is assumed that other utilities would take further corrective actions to maintain voltages at acceptable levels west of Boone during contingencies.)

If an additional line between the wind farm and Lamar is modeled, for the light load scenario in case 11-12 lw F4, there are no line overloads or voltage criteria violations for this contingency for inclusion of the wind farm in the model. However, for the addition of the wind farm to the 2011 heavy load scenario in case 11 hs F4a, the voltage sinks to about .92 per unit at La Junta even with the installation of 37.5 MVArs of capacitors at Willow Creek and La Junta. For the 2011 heavy summer scenario, addition of a transmission line between the wind farm and La Junta shows no overloads and maintains the La Junta TS voltage at .92 per unit without shunt capacitors as shown in case 11 hs G4. Addition of 15 MVArs of capacitors brings the voltage at La Junta to .944 per unit.

For the reduced generation case 07 hs D4a, output of 75 MWs by the wind farm finds the voltage at La Junta TS being .922 per unit with 15 MVARS of capacitors.

In the REGIONOUT analysis, for the 2007 summer case with a 75 MW wind farm and 22.5 MVAR at La Junta TS, the voltage deviation at La Junta TS was slightly higher than desired at 6.3 percent with a voltage level maintained at .945 per

unit. For the 2011 summer case with the additional line to Lamar and an additional 15 MVArs in the La Junta area, the same results were found except

that the La Junta TS voltage was .954 per unit. Voltage deviation at Boone Tap 69 kV was also slightly above the 5 percent deviation limit in this scenario.

La Junta TS – Boone 115 kV
Willow Creek – La Junta TS 115 kV

These two single-contingencies generally impact the system in the same manner. However, the La Junta-Boone outage leaves Tri-State's La Junta Substation served radially from Willow Creek, approximately 60 miles away. For both cases 06-07 lw B5 with the La Junta-Boone outage and Case 06-07 lw B6 for the Willow Creek-La Junta, the 100 MVA 230-115 kV transformer at Lamar overloads by about 30 percent with 120 MW of wind farm generation. Installation of a second transformer at Lamar as shown in case 11-12 lw B6a eliminates this overload. For the heavy load scenario in Case 07hs B5 there was no overloads and the voltage at La Junta TS was corrected to above .95 per unit with a 7.5 MVAR capacitor. For the outage of the Willow Creek-La Junta line, case 07 hs B6 did find a six percent overload of the Lamar transformer. This situation was repeated in case 11 hs B6 with an 11 percent overload of the transformer.

Addition of a transmission line between the wind farm and La Junta shows no overloads or voltage criteria violations for the Willow Creek-La Junta outage in light load case 06-07 lw G6 or heavy load case 11 hs G6. An additional transmission line between the wind farm and Lamar does not eliminate this overload as shown by case 11-12 lw F6 in which the load on the Lamar transformer is 147 percent of its rating or case 11 hs F6 for which the transformer is overloaded by 13 percent.

For the reduced generation cases, output of 100 MWs by the wind farm overloads the Lamar transformer by 27 percent as shown in case 06-07 lw C6. A reduced output of 75 MWs for the light load conditions in case 06-07 lw D6 results in a one percent overload. Under the heavy load scenario in case 07 hs D6, there are no overloads for this contingency when the wind farm generates 75MWs.

In the REGIONOUT analysis, for the 2007 or 2011 summer case with the additional line to Lamar and an additional 15 MVArs in the La Junta area, the Lamar transformer did flag as overloading. Addition of a second transformer at Lamar would remove this overload. As noted in the minimal start-up system for the EPTP, Tri-State is planning on a second transformer for Lamar by 2011. Acceleration of the installation date for this transformer by several years would remove this problem for the proposed 120 MW wind farm installation.

Lamar – Willow Creek 115 kV

This outage leaves Tri-State's Willow Creek Substation radially served from Tri-State's La Junta Substation. For the light load scenario, this contingency presents no overload problems as shown by case 06-07 lw B7. For the heavy load scenario, case 07 hs B7 finds the Willow Creek voltage at .945 per unit and .9 per unit in case 11 hs B7 without shunt capacitor compensation.

The SECPA 69 kV system overloads for this contingency with the wind farm at a 120 MW output for the 2007 and 2011 summer scenarios. The flow of power on the SECPA 69 kV line between Vilas and Walsh Substation loads this line to 53 MVA or 136 percent of its thermal rating as shown in case 07 hs B7. The Walsh to Twin Buttes section of line, approximately 13 miles, is also overloaded. This transmission line is conductored with 267 MCM ACSR with thermal rating of 39 MVA at 50°C. A similar result is found in case 11 hs B7.

Addition of a transmission line between the wind farm and La Junta would not cause overloads for this contingency. An additional transmission line between the wind farm and Lamar reduces the overload to 15 percent between only Vilas and Walsh Substations, a distance of about 10 miles.

If the Customer desires to generate at full output for the outage of this line or others such as Tri-State's Vilas-Lamar 115 kV, portions of SECPA's 69 kV system may need to be up-rated. Unless a second line is built into the La Junta area, at least the section of 69 kV line between Vilas Substation to Walsh Substations would need to be uprated from a 50°C to a 75 °C thermal rating of 61 MVA.

As Tri-State does not own this line, *i.e.* it is owned by SECPA which is a Tri-State Member, the Customer will need to make arrangements with SECPA to reinforce that system as well to use it as a transmission path for certain contingencies on the Tri-State system. Otherwise, a transfer trip relaying scheme to disconnect some or all of the wind farm generation of the Customer may be necessary for this contingency. Based on typical costs, if the structures on this line are in good condition, it is likely the cost to up-rate this line between Vilas and Walsh Substations would be at least $.650 million.

Lamar – Vilas 115 kV

Without an additional line connecting the wind farm to the Tri-State system, an outage of the Lamar-Vilas 115 kV line would leave the SECPA 69 kV system as the only transmission path for the wind farm generation. Case 06-07 lw D11was run with the wind farm generation at 75 MW and found that low voltages and overloads occur along the entire SECPA 69 kV system from Vilas to Willow

Creek. At 50 MW of generation for case 06-07 lw E11 voltages appear acceptable but the existing 39 MVA rating of the 69 kV line is exceeded for its

total 78 miles of length between Vilas and Willow Creek Substations. Case 06-07 lw F11 was run with the wind farm generating 25 MW and this contingency caused no criteria violations on the SECPA 69 kV system. It appears that slightly less than 50 MW of generation could be accommodated on SECPA's 69 kV system with the previously described up-rating to 75 °C for the total line length.

As Tri-State does not own this line nor consider it part of its transmission system, it would employ a transfer trip relaying scheme to disconnect the wind farm generation of the Customer from the Tri-State transmission system for this contingency unless an additional transmission line owned and operated by Tri-State connected the wind farm to Tri-State's transmission system.

Significant Outages West of Boone

Boone – Midway 230 kV

Review of results for this contingency using the light and heavy load scenarios does not show any thermal overloads of any transmission lines east of the Boone-Lamar area. Only for case 11 hs B3 was the voltage at La Junta TS below .95 per unit and this was without consideration of shunt capacitors.

For the modified base cases with and without the wind farm, the wide area REGIONOUT analysis found this contingency caused the Hyde Park-Hyde Park 115 kV line to load to 100 percent of its 99 MVA thermal rating for the 2011 heavy summer scenario with 120 MW of generation by the wind farm plus the additional line to Lamar and 15 MVArs of capacitors and this outage increased the overload on the Hyde Park-Pueblo 115 kV line by about ten and six percent for the 2007 heavy summer case with the wind farm at respectively 120 and 75 MW relative to the outages found for no wind generation. For the 2007 heavy summer case, 120 MW of generation with the additional line to Lamar and 15 MVArs of capacitors causes the Hyde Park-West Station line to load to 104 percent of its rating and increased the overload on the Hyde Park-West Station 115 kV line by six percent for the 2007 heavy summer case with the wind farm at 75 MW relative to the case with no wind generation.

While the modeling results do not indicate any system criteria violations on the Tri-State system east of Boone, loss of this line does eliminate Tri-State's ability to provide a path for generation in the Lamar area to Midway. Tri-State does have a transmission service agreement with Xcel to allow for scheduling of power from Ault Substation through Xcel's transmission system to the 230 kV bus at Xcel's Comanche Station or Boone Substation but this is only in a north to south direction. In this instance, to provide a firm transmission path beyond Boone for

delivery of the wind farm generation would require another transmission line between Boone and Midway or a contractual wheeling agreement with Xcel to

provide an alternate path for the loss of this transmission line. With the second phase of the EPTP, Tri-State would have another transmission line between Boone and Midway in about 2014. To construct a 45 mile long 230 kV line between Boone and Midway with the associated 230 kV circuit breakers would cost approximately $23 million in 2008 dollars.

Comanche-Fuller 230 kV
Comanche-Midway PSCo 230 kV

As shown in the REGIONOUT analysis for the 2007 heavy summer scenario with the wind farm generation at 120 MW with the additional line to Lamar and 15 MVArs of capacitors, these two contingencies slightly load the Hyde Park-West Station 115 kV line above its stated rating of 99 MVA. [10]

Comanche-Midway 230 kV
Midway Western-Midway PSCo 230 kV
Midway-West Canon 230 kV
Midway PSCo 230-115 kV transformer
West Canon 230-115 kV transformer
Airport Memorial- Airport Park 115 kV
Airport Memorial – Airport Tap2 115 kV
Airport Park – Airport Tap 115 kV

Airport Tap2-DOT Tap 115 kV
Airport Tap-Northridge 115 kV
Canon City-Skala 115 kV
Midway PSCo-West Station 115 kV
Reader 115-69 kV transformer
Stem Beach-Walsenburg 115 kV
Walsenburg 115-69 kV transformer
Belmont-Blende 69 kV
Free Mary-Reader 69 kV

From the REGIONOUT data for the 2011 heavy summer scenario with the wind farm generation at 120 MW with the additional line to Lamar and 15 MVArs of capacitors, the first two contingencies slightly overload the Hyde Park-Pueblo 115 kV above its stated rating of 99 MVA. [11] The other contingencies slightly

[10] As shown in the Colorado Long Range Transmission Planning Study which is available on the Tri-State OASIS web site, this line is scheduled for reconductoring with a thermal limit of 162 MVA in 2007.

[11] As shown in the Colorado Long Range Transmission Planning Study, this line is scheduled for reconductoring with a thermal limit of 162 MVA in 2007.

overload this line for the 2007 heavy summer scenario with 120 MW of generation. The second, third, sixth, seventh, eighth, twelfth, and sixteenth,

listed contingencies also caused a slight overload to occur for the 2007 scenario with just 75 MW of wind farm generation.

Boone 115-69 kV transformer
Boone – Boone Tap 69 kV

For the 2011 heavy summer scenario with the wind farm generation at 120 MW with the additional line to Lamar and 15 MVArs of capacitors, the first two contingencies loads the Boone-La Junta W (Aquila) 115 kV line to its stated rating of 40 MVA. [12]

Pueblo-Reader 115 kV

For the 2011 heavy summer scenario with the wind farm generation at 120 MW with the additional line to Lamar and 15 MVArs of capacitors, this contingency loads the Free Mary-Reader 115 kV line to its stated rating of 99 MVA.

Miscellaneous Contingencies

As shown in the REGIONOUT output included in Appendix G, there are also a number of instances in which the wind farm generation increases the amount of overload on a facility found in the base case without the wind farm generation. In other words, the overload for that contingency exists in the base case; the wind farm generation does not trigger the overload. In a similar manner, a number of the voltage violations recorded in the REGIONOUT data were in addition to others in the base case without the wind farm or the initial voltage was well below the nominal value. Nevertheless, these are impacts of the addition of the wind farm to the transmission system and flagged in this data.

For the REGIONOUT results using the 2007 heavy summer scenario with the wind farm generation at 120 MW, there were four single contingency cases that did not solve. Upon review, a power flow solution was obtained for these cases without overloads attributed to the wind farm. A similar situation existed for the 2007 scenario with the wind farm generation at 75 MW for five single contingencies.

Short Circuit Study Results

The short circuit analysis was run utilizing the ASPEN One Liner Version 10.8, Build 2006.07.3 Group 1 software package. The per unit impedance values

[12] As previously noted, CT reset or replacement is likely to relieve this condition.

based on the generator rating for GE's 1.5 MW DFIG turbine used in this study were assumed to be as follows:

Subtransient Reactance X''_d	j .21032
Transient Reactance X'_d	j .30224
Synchronous Reactance X_d	j .31679

The study consisted of conducting three-phase and phase to ground faults at the 115 kV bus at Vilas without the 120 MW wind farm and at Vilas, Lamar and the Wind Farm substations with the 120 MW wind farm. At Vilas Substation, 69 kV circuit breaker 462 is rated at 72.5 kV with a continuous current rating of 1200 amperes and a short circuit capability of 26 kA. Circuit breaker 262 on the 115 kV bus is rated at 121 kV with a continuous current rating of 1200 amperes and a short circuit rating of 22 kA. As shown in the following table, the results of this analysis do not indicate that this 120 MW wind farm and its associated transmission line(s) would adversely impact the ratings of any existing equipment on the Tri-State transmission system. The results are as follows:

Table 1 Short Circuit Results (kA)

Fault Description	**System Description**	**Fault Current @ 6 Cycles (kA, RMS)**
LLLG[13] @ Vilas 115 kV	Existing System	1.072
SLG @ Vilas 115 kV	Existing System	1.179
LLLG @ Vilas 115 kV	Wind Farm-Vilas 115 kV with 120 MW	2.261
SLG @ Vilas 115 kV	Lamar-Wind Farm-Vilas 115 kV with 120 MW	1.851
LLLG @ BA 115 kV	Wind Farm-Vilas 115 kV with 120MW	2.473
SLG @ BA 115 kV	Wind Farm-Vilas 115 kV with 120 MW	1.980
LLLG @ Lamar 115 kV	Wind Farm-Vilas 115 kV with 120MW	3.343
SLG @ Lamar 115 kV	Wind Farm-Vilas 115 kV with 120 MW	3.689
LLLG @ Vilas 115 kV	Lamar-Wind Farm-Vilas 115 kV with 120 MW	2.401
SLG @ Vilas 115 kV	Lamar-Wind Farm-Vilas 115 kV with 120 MW	2.111
LLLG @ BA 115 kV	Lamar-Wind Farm-Vilas 115 kV with 120 MW	3.115
SLG @ BA 115 kV	Lamar-Wind Farm-Vilas 115 kV with 120 MW	2.816
LLLG @ Lamar 115 kV	Lamar-Wind Farm-Vilas 115 kV with 120 MW	3.750
SLG @ Lamar 115 kV	Lamar-Wind Farm-Vilas 115 kV with 120 MW	3.928

Costs Estimates and Assumptions:

Based on the results of this analysis, Tri-State should on its own accord reset or replace the CTs on its 115 kV system in the Boone-Lamar area. On its own accord, Tri-State should also provide approximately 22.5 MVARS of shunt capacitors at the La Junta TS Substation or a portion thereof at Willow Creek

[13] LLG means a simultaneous three phase fault, SLG is a single line to ground fault.

Substation to provide system voltage regulation for the contingency of the loss of the Boone 230-115 kV transformer or participate in the installation of a second

transformer at that location. These improvements to the existing system are either needed now or in conjunction with the initial phase of the EPTP. They would be available for the Customer's proposed project either as an ER or NR. This assumption is included in the following cost analysis.

The estimated costs shown are "indicative", with an anticipated accuracy within +/-30%, preliminary budgetary costs in **2008** dollars and are based upon planning cost estimates which are typical of construction costs for previously performed similar construction. These estimated costs include all applicable labor and overheads associated with the engineering, design, and construction of these new facilities. These estimates do not include any costs for any Customer-owned, supplied, and installed equipment and associated design and engineering.

The following table lists the interconnection cost required to accommodate the interconnection of the proposed wind farm at either 75 or 120 MW:

Table 2 Customer Interconnection Facilities

Element	**Description**	**Cost Est. ($Million).**
Vilas Switching Station	Connect Customer to Tri-State's 115kV bus. The new equipment includes dead-end structure, bus extension, 115 kV power circuit breaker metering, relaying and associated equipment and material.	**$920k**
Siting and Land Rights for required easements, reports, permits and licenses.		**$20k**
Total Cost		**$940k**

Table 3 Customer Interconnection Facilities

Element	**Description**	**Cost Est. ($Million).**
Wind Farm Switching Station	Construct new switching station on the Lamar-Vilas 115 kV line and connect Customer to Tri-State's 115kV bus at new switching station. The equipment includes bus work, 115 kV power circuit breaker, two motor operated disconnect switches, control house and power supply, communications, metering, relaying and associated equipment and material.	**$1900k**
Siting and Land Rights for required easements, reports, permits and licenses.		**$50k**

Total Cost	**$1950k**

Assumptions:
Substations
- Tri-State (or its contractor) crews will perform all construction and wiring associated with Tri-State-owned and maintained equipment.
- Minimal siting, permitting and land acquisition is included in the substation estimates.
- Detailed field investigations have not been conducted and could increase these estimates.
- No visual screening has been included in the estimated cost at any of the substations. If required, this additional cost could be significant.
- The estimated time for design and construction for these projects is at least 18 months after authorization to proceed has been received. Local and state approvals are not recognized in this estimate and could require additional time.

Transmission system improvements to allow the Customer to generate at 120 MW as a NR would require connection of a second line to the Customer's wind farm location along with other improvements to terminate this line. This analysis reviewed three potential means of meeting this requirement. All would appear to meet Tri-State's criteria although Tri-State would likely prefer that the additional line terminate at the farthest west location possible, *e.g.* Boone Substation. These options still assume primary interconnection at Villas as stated by the Customer in the interconnection request but loop the wind farm generation into a second point of termination through two separate transmission lines. This implies that the 19 mile long line the Customer proposes to construct to Vilas Substation may become a network upgrade. If the Customer desires to proceed with its proposal under the NR designation, discussion between Tri-State and the Customer concerning design of that line needs to be part of the negotiation process. The estimates for 115 kV operation are herein provided are only in terms of 115 kV construction. It is likely that Tri-State would desire to build the facility for operation at a higher voltage in anticipation of additional future demands.

The likely least expensive and least complicated in terms of coordination with other utilities option would be the construction of a second transmission line from the Customer's site to Lamar. This configuration is shown in Figure six of Appendix A. This would require a 115 kV ring bus at the Customer's site and termination of another 115 kV line at Lamar. For system reliability purposes, the second Lamar 230-115 kV transformer installation required for the EPTP is assumed to be accelerated by two years. This scenario would require an additional 15 MVAr of capacitors in the Willow Creek/La Junta TS area. To meet the requirements of the summer load scenario, this option would require uprating approximately 10 miles of the SECPA 69 KV line between Vilas and Walsh

Substation from a 50 °C to a 75 °C conductor temperature limit. Although it is unlikely that all generation and the DC tie in the Boone-Lamar area would be on at the levels modeled in the light winter cases in this analysis, this light winter scenario did indicate the need for uprating the 59 mile long Willow Creek to La Junta TS 115 kV line from a 65 °C to a 75 °C conductor temperature limit. While this cost is included in the estimate, it becomes unnecessary for this option with completion of the first phase of the EPTP. Therefore, if operationally acceptable, a short-term, approximately two years, transfer trip relaying scheme might be employed for the loss of the Boone-Lamar 230 kV line to avoid this cost. This option may also require uprating the Aquila 115 kV line from Boone Substation to DOT Tap line earlier than previously estimated. [14] However, the estimated overload for the second line to Lamar option is five percent or less so it is not included in this cost estimate.

Table 4 Tri-State Network Upgrades for an additional line terminated at Lamar required to deliver the proposed 120 MW increase from Wind Generation Facility as an NR Request

Element	Description	Cost Est. ($Million)
Wind Farm Switching Station	Construct new switching station at the Customer's site and connect Customer to Tri-State's 115kV bus at Lamar Substation as well as to Vilas Substation through a three breaker ring bus. The equipment includes bus work, 115 kV power circuit breakers, associated disconnect switches, control house and power supply, communications, metering, relaying and associated equipment and material. The estimate includes siting and land rights for required easements, reports, permits and licenses.	**$3.000**
Wind Farm – Lamar 115 kV transmission line	Construct a new 477 MCM ACSR 115 kV transmission line from the ring bus at the Wind Farm Switching Station to the 115 kV bus at Lamar Substation. This includes ROW cost for rural areas- 42 miles	**$10.800**
Lamar Substation	Terminate new 115 kV line from the Wind Farm Switching Station on 115 kV bus through a new 115 kV line breaker and accelerate installation of second 230-115 kV transformer	**$1.800**
La Junta	Two new 7.5 MVAR Capacitor Banks requiring a 115 kV circuit breaker, two 115 kV interrupter switches, associated steel, associated electrical bus work , control, and relaying	**$1.950**
SECPA Vilas-Walsh 69 kV transmission line	Uprate the existing 69 kV line between Vilas and Walsh Substation from a 50 °C to 75 °C conductor temperature rating - 10 miles	**$.650**

[14] As shown in the Colorado Long Range Transmission Planning Study, this three mile long line is scheduled for reconductoring with a thermal limit of 162 MVA in 2010.

Willow Creek-La Junta TS 115 kV transmission line	Uprate the existing 115 kV line between Willow Creek and La Junta Tri-State from a 65 °C to 75 °C conductor temperature rating - 59 miles	**$6.300**
Total Lamar additional Line Option	Total Cost	**$24.50**
Time Frame	Engineering and Construction 24 months, excludes permitting and ROW acquisition	

A slightly more expensive option and somewhat more complicated coordination problem as it requires a new point of interconnection for Tri-State is the construction of a second transmission line from the Customer's site to Tri-State's La Junta Substation. From that point of termination a 115 kV line would be constructed to the La Junta W Substation of Aquila to form a point of interconnection between Aquila and Tri-State. This would require a 115 kV ring bus at the Customer's site and termination of a 115 kV line at La Junta TS. Two line terminations at the La Junta TS Substation and one at the La Junta W Substation would be required. This option would likely also require uprating the Aquila 115 kV line from Boone Substation to DOT Tap to Airport Memorial Substation as theses line segments overload by about 15 percent for the light winter scenario with generation of 120 MW at the wind farm. [15] Again, it should be noted that the light winter case assumes a maximum generation scenario in the Boone-Lamar area. In this instance, only the eleven mile section not noted by Aquila for a planned uprating is shown as directly charged against the Customer's project. A cost estimate for acceleration by two years of the remaining line length uprate was also added to this number

Table 5 Tri-State Network Upgrades for an additional line terminated at La Junta with interconnection to Aquila required to deliver the proposed 120 MW increase from Wind Generation Facility as an NR Request

Element	Description	Cost Est. ($Million)
Wind Farm Switching Station	Construct new switching station at the Customer's site and connect Customer to Tri-State's 115kV bus at La Junta Substation as well as to Vilas Substation through a three breaker ring bus. The equipment includes bus work, 115 kV power circuit breaker, associated disconnect switches, control house and power supply, communications, metering, relaying and associated equipment and material. The estimate includes siting and land rights for required easements, reports, permits and licenses.	**$3.000**

[15] As shown in the Colorado Long Range Transmission Planning Study, Aquila has plans to upgrade about 11 miles of this 22 mile long line through a reconductor with a thermal limit of 162 MVA scheduled in 2010.

Wind Farm – La Junta 115 kV transmission line	Construct a new 477 MCM ACSR 115 kV transmission line from the ring bus at the Wind Farm Switching Station to the 115 kV bus at La Junta W Substation. This includes ROW cost for rural areas- 77 miles	**$21.800**
La Junta TS Substation	Terminate new 115 kV lines from the Wind Farm Switching Station and La Junta W on 115 kV bus through two new 115 kV line circuit breakers	**$1.750**
La Junta W Substation	Terminate new 115 kV line from La Junta TS Substation on the 115 kV bus through a new 115 kV line breaker including associated additional steel, electrical bus work, and disconnect switches.	**$1.250**
Aquila Boone-Airport Memorial 115 kV transmission line	Uprate the existing 22 mile long 115 kV line between Boone Substation through the DOT Tap to Airport Memorial Substation from a 99 MVA to a 162 MVA conductor rating - 11 miles new and 11 miles accelerated cost	**$2.900**
Total La Junta additional Line Option	Total Cost	**$30.700**
Time Frame	Engineering and Construction 24 months, excludes permitting and ROW acquisition	

The most expensive option is the construction of a second transmission line from the Customer's site to Xcel's Boone Substation which would be built and operated at 230 kV. Although this option provides the most new capacity and best performance for the Boone-Lamar transmission system, all noted options will perform adequately for the proposed wind farm. While Tri-State connects to the Xcel system at Boone, a limited amount of coordination is likely to still be required with Xcel for a new line termination at Boone Station. Under this scenario a 115 kV ring bus at the Customer's site would still be required as the initial termination point requested by the Customer was Vilas Substation. To operate the line at 230 kV, a 230-115 kV substation was assumed to be built at the Customer's wind farm site.

Table 6 Tri-State Network Upgrades for an additional 230 kV line terminated at Boone substation required to deliver the proposed 120 MW increase from Wind Generation Facility as an NR Request

Element	Description	Cost Est. ($Million)
Wind Farm Switching Station	Construct new switching station at the Customer's site and connect Customer to Tri-State's 230-115kV transformer at the Wind Farm Substation as well as to Vilas Substation through a three breaker ring bus. The equipment includes bus work, 115 kV power circuit breaker, associated disconnect switches, control house and power supply, communications, metering, relaying and associated equipment and material. The estimate includes siting and land rights for required easements, reports, permits and licenses.	**$3.000**
Wind Farm – Boone 230 kV transmission line	Construct a new 1272 MCM ACSR 230 kV transmission line from the 230 kV termination at the Wind Farm Substation to the 230 kV bus at Boone Substation. This includes ROW cost for rural areas- 115 miles	**$44.800**
Boone Substation	Terminate the new 230 kV line from the Wind Farm Substation on the 230 kV bus through two new 230 kV line breakers in a breaker and half switching scheme	**$2.400**
Wind Farm 230 kV Substation	Install 230-115 kV transformer and terminate new 230 kV line from Boone Substation.	**$4.250**
Total Boone 230 kV additional Line Option	Total Cost	**$54.450**
Time Frame	Engineering and Construction 24 months, excludes permitting and ROW acquisition	

Assumptions:

Substations

- Tri-State (or its contractor) crews will perform all construction and wiring associated with Tri-State-owned and maintained equipment.
- Minimal siting, permitting and land acquisition costs are included in the substation estimates
- Detailed field investigations have not been conducted and could increase these estimates.
- No visual screening has been included in the estimated cost at any of the substations. If required, this additional cost could be significant.
- The estimated time for design and construction for these projects is at least 18 months after authorization to proceed has been received. Local and state approvals are not recognized in this estimate and could require additional time.

Transmission Lines

- New ROW is assumed to be available at typical rural land costs.
- Minimal siting and permitting costs are included in the line construction estimates
- Detailed field investigations have not been conducted and could increase these estimates.
- Environmental and local permitting issues have not been addressed in this analysis and would need to be assessed in the next study.
- The estimated time for design and construction for the Tri-State transmission line network upgrades is approximately 24 months after authorization to proceed has been received. Permitting and ROW acquisition time frames are extremely subjective and depend on the situation. If there are problems with local, state, and environmental approvals, this could require considerable time which could be measured in years.