Interconnection Feasibility Study

Project TI-06-0929A

May 10, 2007

Table of Contents

1. Executive Summary 3
2. Project Summary 4
3. Study Assumptions 4
4. Power Flow Cases 5
5. Study Scope Summary 7
   5.1. Power Flow Analysis 7
   5.2. Short Circuit Analysis 9
6. Study Results 9
   6.1. Power Flow 9
      6.1.1. Mitigation 10
         6.1.1.1. Network Resource Mitigation Alternatives 10
         6.1.1.2. Energy Resource Mitigation 10
   6.2. Short Circuit 11
7. Cost and Construction Schedule Estimates 11
8. Re-Study 11

Appendix A - Contingency List
Appendix B - Power Flow Results
Appendix C - Power Flow Plots

1. Executive Summary

The Interconnection Customer (IC) submitted a completed Interconnection Request (IR) to Tri-State Generation and Transmission Association, Inc. (Tri-State) for their proposed Large Generating Facility (Project) designated TI-06-0929A in the Tri-State interconnection request queue. The Project is 100 MW of wind generation using 55 1.8 MW Vestas V80 turbines, located approximately 40 miles southwest from and interconnected to the Burlington 230 kV substation. The proposed in-service date of the Project is November 1, 2008.

In accordance with Federal Energy Regulatory Commission (FERC) Large Generator Interconnection Procedures (LGIP), Tri-State performed an Interconnection Feasibility Study (IFS). The IFS determined the following:

1. Preliminary identification of any circuit breaker short circuit capability limits exceeded as a result of the interconnection.
2. Preliminary identification of any thermal overload or voltage limits violations resulting from the interconnection.
3. Preliminary list of facilities, a non-binding good faith estimate of cost responsibility and a non-binding good faith estimated time to construct facilities necessary to interconnect the Project.

Nothing in this report confers or implies transmission service is available.

2. Project Summary

The Project consists of 55 1.8 MW Vestas V80 wind turbines for a maximum output of 100 MW. The Project is located approximately 40 miles southwest from and interconnected to the Burlington 230 kV substation. The proposed in-service date of the Project is November 1, 2008. Figure 1 below shows a conceptual single-line diagram.

Figure 1: TI-06-0929A 100 MW Wind Project Conceptual Single-Line Diagram

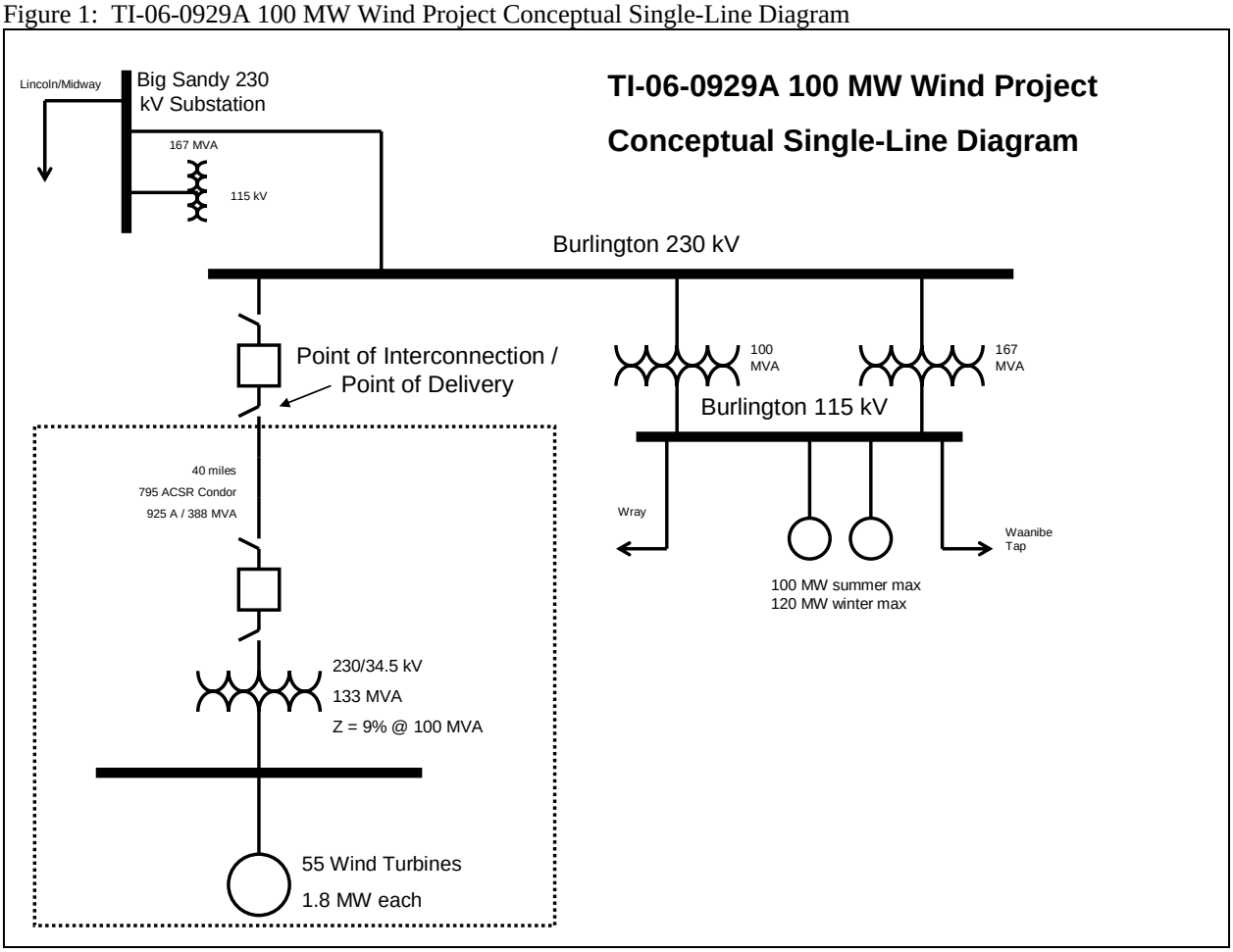

3. Study Assumptions

The following general assumptions were used for this study:

1. The Project consists of 55 1.8 MW Vestas V80 wind turbines for a maximum output of 100 MW.
2. The project will be interconnected to the Burlington 230 kV substation through a 40 mile 230 kV line with 795 ACSR Condor rated at 925 A/388 MVA.

3. The main step-up transformer was modeled as a 230/34.5 kV transformer rated at 133 MVA with 9% impedance at 100 MVA.
4. The secondary step-up transformer was modeled as a 34.5/0.69 kV transformer rated at 101.5 MVA with 7.5% impedance at 101.5 MVA and X/R ratio of 9.615.
5. Lower voltage collector lines were not modeled.
6. The Project was studied with the 100 MW output scheduled as a
    a. Network Resource (NR) to Metro Denver
    b. Network Resource to Tri-State
    c. Energy Resource (ER) to California
    d. The output level up to which no network upgrade costs are incurred to each of the three delivery points detailed in a, b, and c above.
7. The preferred method to account for power injection is to reduce generation at one or more generating units in the area where the Project output is scheduled for delivery.
8. Regional transmission projects that will be operational by 2009 were modeled in the power flow cases.
9. Proposed generation projects in the Tri-State, Western Area Power Administration (WAPA) and Xcel Energy interconnection queues that have a higher queue position than the Project and that will be operational before the Project were modeled in the power flow cases.

Table 1 identifies interconnection queue generation projects that were modeled in the power flow and short circuit cases.

Table 1 Modeled Interconnection Queue Generation Projects

Transmission Provider	Number	Point of Interconnection	Capacity (Technology)
WAPA	2004-G2	Akron 115 kV	100 MW (wind)
WAPA	2004-G4	Limon, CO area, Big Sandy 115 kV	100 MW (wind)
WAPA	2004-G8	Frenchman Creek/Wauneta 115 kV area	100 MW (wind)
Tri-State	TI-04-1123	Big Sandy 230 kV	120 MW (wind)
WAPA	2005-G1	Fleming/Haxtun 115 kV area	120 MW (wind)

4. Power Flow Cases

Two (2) pre-project power flow cases were developed using available Western Electricity Coordinating Council (WECC) base cases.

1. 2009 Heavy Summer
2. 2008/09 Light Winter

The WECC 2009 Heavy Summer base case “09hs2a” was used to represent heavy load conditions.

The WECC 2007 Light Winter base case “07lw1a” was used for light load conditions. The 2007 Light Winter case was modified to represent 2008/09 Light Winter load levels in the Colorado area and includes any regional transmission system changes consistent with the 2009 Heavy Summer case. Loads in Zone 712 (Aquila Western Plains) were scaled to 20% (97 MW) of the

2009 Heavy Summer levels (486 MW). Loads in Zone 752 (Eastern Colorado) were scaled to 14% (76 MW) of the 2009 Heavy Summer levels (565 MW). The generation dispatch in areas 70 and 73 was unchanged; therefore the decreased loads were balanced by exporting additional power to California area 30. Generation in the Idaho/Wyoming area was re-dispatched to reduce Path 19 Bridger West loading to be within the path rating limit of 2200 MW East to West.

These power flow cases model regional transmission projects that are expected to be operational by 2009. The power flow cases also modeled proposed generation projects that are expected to be operational by 2009 as shown in Table 1. Generation projects that are electrically far away from the Project were not modeled in the power flow cases.

The following changes were made to the 2009 heavy summer pre-project case:

1. Burlington Units 1 and 2 were dispatched at 50 MW each
2. Limon/Lincoln Units 1 and 2 were dispatched at 76 MW each
3. Added WAPA and Tri-State generation/transmission interconnection queue projects
4. Added WAPA line rating changes and queue projects plans of service
5. Added Tri-State planned line rating changes for Lincoln to Midway
6. Turned off Nucla, Rifle and Craig 3
7. Opened Joes Junction - Arickaree 115 kV line section (summer setup)
8. Closed Anton - Arickaree 115 kV line (summer setup)
9. Added Big Sandy-Smoky Hill 230 kV line and Weld 230/115 kV bank
10. Changed rating of Big Sandy-Lincoln-Midway 230 kV line to 442 MVA from 336 MVA in anticipation of Tri-State Generation and Transmission Association uprate in 4Q/2008.
11. Set rating 2 = rating 1 if rating 2 is 0 or less than rating 1
12. Modeled Project TI-06-0929A, 100 MW to Burlington 230 kV, offline

The following changes were made to the 2008/09 light winter pre-project case:

1. Burlington Units 1 and 2 were dispatched at 60 MW each
2. Limon/Lincoln Units 1 and 2 were dispatched at 0 MW each
3. Added WAPA and Tri-State generation/transmission interconnection queue projects
4. Added WAPA line rating changes and queue projects plans of service
5. Added Tri-State planned line rating changes for Lincoln to Midway
6. Turned off Nucla, Rifle and Craig 3
7. Closed Joes Junction - Arickaree 115 kV line section (winter setup)
8. Opened Anton - Arickaree 115 kV line (winter setup)
9. Added Big Sandy-Smoky Hill 230 kV line and Weld 230/115 kV bank
10. Changed rating of Big Sandy-Lincoln-Midway 230 kV line to 442 MVA from 336 MVA in anticipation of Tri-State Generation and Transmission Association uprate in 4Q/2008.
11. Set rating 2 = rating 1 if rating 2 is 0 or less than rating 1
12. Modeled Project TI-06-0929A, 100 MW to Burlington 230 kV, offline

Six (6) post-project power flow cases were developed from the pre-project cases.

1. 2009 Heavy Summer with Project output scheduled to Xcel Energy
2. 2009 Heavy Summer with Project output scheduled to Tri-State
3. 2009 Heavy Summer with Project output scheduled to California
4. 2008/09 Light Winter with Project output scheduled to Xcel Energy

5. 2008/09 Light Winter with Project output scheduled to Tri-State
6. 2008/09 Light Winter with Project output scheduled to California

For the post-project cases, the Project was turned on with an output level of 100 MW. To accommodate the 100 MW Project output, the following changes were made to the pre-project cases:

1. Scheduled 100 MW to Area 70 PSCO from Area 73 WAPA RM and reduced Cherokee 3 for output scheduled to Xcel Energy
2. Decreased Craig Unit 2 by 100 MW for output scheduled to Tri-State
3. Scheduled 100 MW to Area 30 PG&E from Area 73 WAPA RM and reduced Pittsburg Unit 7 for output scheduled to California as Energy Resource

The loads and resources are summarized in Table 2.

Table 2: Power Flow Cases Load and Resource Summary

Load and Resource Summary	**2009 Heavy Summer (MW)**				**2009 Light Winter (MW)**			
	pre	**pst-caer**	**pst-psco**	**pst-tsgt**	**pre**	**pst-caer**	**pst-psco**	**pst-tsgt**
Generation								
Area 70	6,507	6,507	6,412	6,507	3,659	3,660	3,562	3,659
Area 73	6,220	6,322	6,325	6,222	4,837	4,944	4,944	4,842
MBPP 1-2 (swing)	1,017	1,018	1,021	1,028	1,051	1,058	1,058	1,056
Craig 1-2-3	883	883	883	783	740	740	740	640
Nucla	0	0	0	0	0	0	0	0
Rifle	0	0	0	0	0	0	0	0
Limon/Lincoln	152	152	152	152	0	0	0	0
Burlington	100	100	100	100	120	120	120	120
Tri-State/WAPA Queue Generation	540	640	640	640	540	640	640	640
TI-06-0929A	0	100	100	100	0	100	100	100
Load								
Area 70	7,580	7,580	7,580	7,580	4,561	4,561	4,561	4,561
Area 73	4,751	4,751	4,751	4,751	2,960	2,960	2,960	2,960
Zone 712	486	486	486	486	97	97	97	97
Zone 752	565	565	565	565	76	76	76	76
Interchange								
Area 70	-1,262	-1,262	-1,362	-1,262	-992	-992	-1,092	-992
Area 73	1,293	1,393	1,393	1,293	1,743	1,843	1,843	1,743

5. Study Scope Summary

This IFS consists of power flow and short circuit studies in order to identify a preliminary list of facilities, a non-binding good faith estimate of cost responsibility and a non-binding good faith estimated time to construct facilities necessary to interconnect the Project.

Nothing in this report confers or implies transmission service is available.

5.1. Power Flow Analysis

Power flow analysis considers a snapshot in time where tap changing transformers, switched voltage devices and automatic generation control have had time to adjust. In addition, a swing bus balances the system during each contingency scenario.

Power flow analysis was performed using the National Electric Reliability Corporation (NERC)/WECC planning standards. Power flow analysis was used to evaluate thermal and voltage performance of the transmission system for NERC/WECC Category A normal (all elements in-service) conditions and NERC/WECC Category B emergency (one element out of service) conditions. Category A (N-0) normal overloads are those that exceed 100% of normal ratings that occur with all facilities in service. Category B emergency overloads are those that exceed 100% of emergency ratings that occur due to a Category B contingency.

Reported normal thermal loading was limited to the condition where a modeled transmission component was loaded above 95% of the normal MVA rating (Rating 1 as entered in the power flow case), and the incremental increase in component loading, between pre-project and post-project, exceeded 1%. Reported emergency thermal loading was limited to the condition where a modeled transmission component was loaded over 95% of its appropriate emergency MVA rating (Rating 2 as entered in the power flow case), and the incremental increase in component loading, between pre-project and post-project, exceeded 1%.

Reported normal voltage violations were limited to the conditions where per unit (pu) voltages were less than 0.95 or greater than 1.05. Reported emergency voltage violations were limited to the conditions where per unit voltages were less than 0.90 or greater than 1.10. In addition, only voltage deviations greater than 5% between the pre and post-contingency and a 1% increase in voltage deviation between the pre and post-project power flow cases were recorded.

Power flow analysis was performed on all pre-project and post-project cases. The results were compared to determine the impacts caused solely by the addition of the Project and to identify the system reinforcements necessary to mitigate the adverse impacts.

The Energy Resource (ER) portion of the study indicates the highest available interconnection capacity without Network Upgrades under NERC/WECC Category A and Category B conditions.

The Category B contingencies included all single element outages in Zones 700 (Denver Metro), 704 (South of Denver Metro), 706 (North of Denver Metro) and 752 (Eastern Colorado) as entered in the power flow cases. A complete listing of contingencies is included in Appendix A.

All power flow analysis was conducted with version 16.0 or higher of General Electric's PSLF/PSDS/SCSC software.

5.2. Short Circuit Analysis

Short circuit analysis was performed to determine the maximum fault currents on buses in the vicinity of the Project. This study assessed the impact of increased fault duty resulting from the Project for single line-to-ground and three-phase faults. Equipment that may become over-stressed as a result of the added generation was identified if the fault duty exceeds 100% of its applicable interrupting capability.

6. Study Results

6.1. Power Flow

For 2009 Heavy Summer, post project scenarios, as described in Section 4, there were no facilities that overloaded for Category A normal conditions and two (2) facilities that overloaded for Category B emergency conditions.

The loss of the Big Sandy - Burlington 230 kV line causes Category B emergency overloads on the two (2) facilities shown in Table 3.

Table 3: 2009 Heavy Summer Category B Emergency Overloads

2009 Heavy Summer Category B Emergency Percent Loading		Rating	Case Percent Loading			
Overloaded Element	Contingency Description		pre	pst-caer	pst-psco	pst-tsgt
BONNY CK 115.00-SO. FORK 115.00 #1 1	Open Line B.SANDY 230-BURLNGTN 230 #1	733 A	35	102	102	102
BURLNGTN 115.00-BONNY CK 115.00 #1 1	Open Line B.SANDY 230-BURLNGTN 230 #1	733 A	38	105	105	105

For 2009 Light Winter, post project scenarios, as described in Section 4, there were no facilities that overloaded for Category A normal conditions and seven (7) facilities that overloaded for Category B emergency conditions shown in Table 4.

Table 4: 2009 Light Winter Category B Emergency Overloads

2009 Light Winter - Category B Emergency Percent Loading		Rating	Case Percent Loading			
Overloaded Element	Contingency Description		pre	pst-caer	pst-psco	pst-tsgt
BONNY CK 115.00-BURLNGTN 115.00 #1 1	Open Line B.SANDY 230-BURLNGTN 230 #1	733 A	73	144	145	145
BONNY CK 115.00-SO. FORK 115.00 #1 1	Open Line B.SANDY 230-BURLNGTN 230 #1	733 A	72	144	144	144
FLEMING 115.00-GALIEN 115.00 #1 1	Open Line B.SANDY 230-BURLNGTN 230 #1	607 A	95	103	103	103
GALIEN 115.00-STERLING 115.00 #1 1	Open Line B.SANDY 230-BURLNGTN 230 #1	607 A	94	102	102	102
IDALIA 115.00-VERNONTP 115.00 #1 1	Open Line B.SANDY 230-BURLNGTN 230 #1	733 A	69	140	140	140
SO. FORK 115.00-IDALIA 115.00 #1 1	Open Line B.SANDY 230-BURLNGTN 230 #1	733 A	70	141	141	141
VERNONTP 115.00-WRAY 115.00 #1 1	Open Line B.SANDY 230-BURLNGTN 230 #1	733 A	68	140	140	140

The loss of the Big Sandy - Burlington 230 kV line also causes voltage deviation violations in the Burlington/Wray 115 kV area. The voltage deviation violations are shown in Table 5.

Table 5: 2009 Light Winter Category B Voltage Deviation Violations

2009 Light Winter - Category B Voltage Deviation Violations			Area	Case Percent Voltage Deviation			
Bus Name	Base Voltage	Contingency Description		pre	pst-caer	pst-psco	pst-tsgt
ARICKARE	115	Open Line B.SANDY 230-BURLNGTN 230 #1	73		-9	-9	-9
BONNY CK	115	Open Line B.SANDY 230-BURLNGTN 230 #1	73		-8	-8	-8
HELL CK	115	Open Line B.SANDY 230-BURLNGTN 230 #1	73		-9	-9	-9
HELL TAP	115	Open Line B.SANDY 230-BURLNGTN 230 #1	73		-10	-10	-10
IDALIA	115	Open Line B.SANDY 230-BURLNGTN 230 #1	73		-12	-12	-12
JOES	115	Open Line B.SANDY 230-BURLNGTN 230 #1	73		-9	-9	-9
LIBERTY	115	Open Line B.SANDY 230-BURLNGTN 230 #1	73		-9	-9	-9
SAGEBRSH	115	Open Line B.SANDY 230-BURLNGTN 230 #1	73		-9	-9	-9
SANDHILL	115	Open Line B.SANDY 230-BURLNGTN 230 #1	73		-8	-8	-8
SO. FORK	115	Open Line B.SANDY 230-BURLNGTN 230 #1	73		-9	-9	-9
VERNONTP	115	Open Line B.SANDY 230-BURLNGTN 230 #1	73		-12	-12	-12
WRAY	115	Open Line B.SANDY 230-BURLNGTN 230 #1	73		-9	-9	-9
WRAY TAP	115	Open Line B.SANDY 230-BURLNGTN 230 #1	73		-9	-9	-9
WRAYWAPA	115	Open Line B.SANDY 230-BURLNGTN 230 #1	73		-9	-9	-9

Complete listings of all power flow results are included in Appendix B and selected power flow plots are included in Appendix C.

6.1.1. Mitigation

The overloaded facilities from the power flow study require transmission upgrades and/or additional facilities in order to interconnect the Project to the Tri-State transmission system.

6.1.1.1. Network Resource Mitigation Alternatives

The preferred transmission upgrade alternative was tested to verify that all criteria violations identified in Section 6.1 were mitigated and that the upgrades do not cause any additional criteria violations. The preferred mitigation includes:

- Add 2nd Big Sandy - Burlington 230 kV line (80.47 miles 1-954 ACSR)

6.1.1.2. Energy Resource Mitigation

The maximum allowable generator output without network upgrades is 90 MW for heavy summer conditions and 35 MW for light winter conditions with the Joes Junction - Anton 115 kV line section open. The limiting contingency is loss of the Big Sandy - Burlington 230 kV line with the Burlington - Bonny Creek 115 kV line section being the limiting facility.The maximum allowable generator output without network upgrades is 90 MW for heavy summer conditions and 15 MW for light winter conditions with the Joes Junction - Anton 115 kV line section closed. The limiting contingency is loss of the Big Sandy - Burlington 230 kV line with the Arickaree - Anton 115 kV line section being the limiting facility. The maximum allowable generator output is the amount of project output that can be dispatched without causing any category b thermal overloads or voltage violations.

6.2. Short Circuit

No equipment short circuit ratings in the vicinity of the project were exceeded as a result of the project. However, assumptions were made in the analysis regarding transmission line and transformer zero sequence impedance and may affect final results.

7. Cost and Construction Schedule Estimates

Non binding opinion of cost and schedule for the Network Resource Alternative is summarized in Table 6.

Table 6: Non Binding Opinion of Cost

Non Binding Opinion of Cost			
	Description	**Cost**	**Schedule***
WIND SITE IC SUB	No Transformer, 230 kV, 2000 A bkr	$2,500,000	36 mo
WIND SITE TO BURLINGTON SUB	40 miles, 954 ACSR, Wood H-Frame, OPGW	$16,000,000	36 mo
BURLINGTON 230 KV SUB	2 ring bus position, 3-2000 A	$7,500,000	36 mo
BURLINGTON #2 230 KV LINE	80.5 miles, 954 ACSR, Wood H-Frame, OPGW	$32,200,000	36 mo
BIG SANDY 230 KV SUB	1 ring bus position, 2000 A	$2,500,000	36 mo
TOTAL		$60,700,000	36 mo

* Typical Tri-State permit, design, and construct schedule would not meet in service date.

8. Re-Study

The IFS was performed according to the assumptions shown in Section 3. A Re-study may be required if a higher queued project drops out of the queue, there is a modification of a higher queued project or any there are changes to the assumptions in this study. Any cost of Re-study shall be borne by the Interconnection Customer (IC). If a Re-study is required, Tri-State will notify the IC in writing. Such Re-study shall take not longer than forty-five (45) Calendar Days from the date of notice.

Appendix A - Contingency List

```
#
# TI-06-0929A IFS category b contingency list
# L-1, T-1 and G-1 for Zones 700 (Denver Metro), 704 (South of Denver Metro),
# 706 (North of Denver Metro) and 752 (Eastern Colorado)
#
#   Case Number 100
#   Base Case Normal Conditions
0
#
#   Case Number 101
1  70005 70397  "1 "    0     # LINE  from  BRUSH SS 115.00 to B.CK PS  115.00  "1 "
0
#
#   Case Number 102
1  70005 70397  "2 "    0     # LINE  from  BRUSH SS 115.00 to B.CK PS  115.00  "2 "
0
#
#   Case Number 103
1  70018 70100  "1 "    0     # LINE  from  SODALAKE 230.00 to CHATFLD  230.00  "1 "
0
#
#   Case Number 104
1  70018 70266  "1 "    0     # LINE  from  SODALAKE 230.00 to LOOKOUT  230.00  "1 "
0
#
#   Case Number 105
1  70021 70322  "1 "    0     # LINE  from  ROCKYTMP 115.00 to PLAINVW  115.00  "1 "
0
#
#   Case Number 106
1  70023 70242  "1 "    0     # LINE  from  ALLISON  115.00 to KENDRICK 115.00  "1 "
0
#
#   Case Number 107
1  70023 70400  "1 "    0     # LINE  from  ALLISON  115.00 to SODALAKE 115.00  "1 "
0
#
#   Case Number 108
1  70036 70037  "1 "    0     # LINE  from  ARAPAHOA 115.00 to ARAPAHOB 115.00  "1 "
0
#
#   Case Number 109
1  70036 70384  "1 "    0     # LINE  from  ARAPAHOA 115.00 to SHERIDAN 115.00  "1 "
0
#
#   Case Number 110
1  70036 70442  "1 "    0     # LINE  from  ARAPAHOA 115.00 to UNIVERS2 115.00  "1 "
0
#
#   Case Number 111
1  70036 70531  "1 "    0     # LINE  from  ARAPAHOA 115.00 to AIR LIQ  115.00  "1 "
0
#
#   Case Number 112
1  70037 70165  "1 "    0     # LINE  from  ARAPAHOB 115.00 to ENGLE3TP 115.00  "1 "
0
#
#   Case Number 113
1  70037 70167  "1 "    0     # LINE  from  ARAPAHOB 115.00 to ENGLEWD2 115.00  "1 "
0
#
#   Case Number 114
1  70037 70398  "1 "    0     # LINE  from  ARAPAHOB 115.00 to SOUTH1TP 115.00  "1 "
0
#
#   Case Number 115
1  70038 70141  "1 "    0     # LINE  from  ARAPAHOE 230.00 to DAKOTA   230.00  "1 "
0
#
#   Case Number 116
```

```
1  70038 70527  "1 "    0     # LINE  from  ARAPAHOE 230.00 to SANTEFE  230.00  "1 "
0
#
#   Case Number 117
1  70039 70108  "1 "    0     # LINE  from  ARGO     115.00 to CHEROKEE 115.00  "1 "
0
#
#   Case Number 118
1  70039 70148  "1 "    0     # LINE  from  ARGO     115.00 to DENVTM   115.00  "1 "
0
#
#   Case Number 119
1  70040 70153  "1 "    0     # LINE  from  ARSENAL  115.00 to DERBY 1  115.00  "1 "
0
#
#   Case Number 120
1  70040 70217  "1 "    0     # LINE  from  ARSENAL  115.00 to HAVANA2  115.00  "1 "
0
#
#   Case Number 121
1  70041 70108  "1 "    0     # LINE  from  ARVADA   115.00 to CHEROKEE 115.00  "1 "
0
#
#   Case Number 122
1  70041 70369  "1 "    0     # LINE  from  ARVADA   115.00 to RUSSELL  115.00  "1 "
0
#
#   Case Number 123
1  70045 70208  "1 "    0     # LINE  from  BANCROFT 115.00 to GRAY ST  115.00  "1 "
0
#
#   Case Number 124
1  70045 70242  "1 "    0     # LINE  from  BANCROFT 115.00 to KENDRICK 115.00  "1 "
0
#
#   Case Number 125
1  70045 70398  "1 "    0     # LINE  from  BANCROFT 115.00 to SOUTH1TP 115.00  "1 "
0
#
#   Case Number 126
1  70046 70396  "1 "    0     # LINE  from  BUCKLY34 230.00 to SMOKYHIL 230.00  "1 "
0
#
#   Case Number 127
1  70046 70491  "1 "    0     # LINE  from  BUCKLY34 230.00 to TOLGATE  230.00  "1 "
0
#
#   Case Number 128
1  70047 70048  "1 "    0     # LINE  from  BARRLAKE 230.00 to GREENVAL 230.00  "1 "
0
#
#   Case Number 129
1  70047 70610  "1 "    0     # LINE  from  BARRLAKE 230.00 to REUNION  230.00  "1 "
0
#
#   Case Number 130
1  70048 70192  "1 "    0     # LINE  from  GREENVAL 230.00 to FTLUPTON 230.00  "1 "
0
#
#   Case Number 131
1  70048 70392  "1 "    0     # LINE  from  GREENVAL 230.00 to SKYRANCH 230.00  "1 "
0
#
#   Case Number 132
1  70048 70410  "1 "    0     # LINE  from  GREENVAL 230.00 to ST.VRAIN 230.00  "1 "
0
#
#   Case Number 133
1  70048 70526  "1 "    0     # LINE  from  GREENVAL 230.00 to IMBODEN  230.00  "1 "
0
#
```

```
#   Case Number 134
1  70048 70528  "1 "    0     # LINE  from  GREENVAL 230.00 to SPRUCE   230.00  "1 "
0
#
#   Case Number 135
1  70048 70590  "1 "    0     # LINE  from  GREENVAL 230.00 to RMEC     230.00  "1 "
0
#
#   Case Number 136
1  70048 70820  "1 "    0     # LINE  from  GREENVAL 230.00 to KEENSBG  230.00  "1 "
0
#
#   Case Number 137
1  70048 70820  "2 "    0     # LINE  from  GREENVAL 230.00 to KEENSBG  230.00  "2 "
0
#
#   Case Number 138
1  70061 70122  "1 "    0     # LINE  from  BOONE    230.00 to COMANCHE 230.00  "1 "
0
#
#   Case Number 139
1  70061 70286  "1 "    0     # LINE  from  BOONE    230.00 to MIDWAYPS 230.00  "1 "
0
#
#   Case Number 140
1  70067 70396  "1 "    0     # LINE  from  BUCKLY12 230.00 to SMOKYHIL 230.00  "1 "
0
#
#   Case Number 141
1  70067 70512  "1 "    0     # LINE  from  BUCKLY12 230.00 to JEWELL1  230.00  "1 "
0
#
#   Case Number 142
1  70068 70272  "1 "    0     # LINE  from  BURROCYN 115.00 to LUDLOTAP 115.00  "1 "
0
#
#   Case Number 143
1  70073 70075  "1 "    0     # LINE  from  CALIFOR1 115.00 to CALIFOR3 115.00  "1 "
0
#
#   Case Number 144
1  70073 70299  "1 "    0     # LINE  from  CALIFOR1 115.00 to NORTH542 115.00  "1 "
0
#
#   Case Number 145
1  70074 70075  "1 "    0     # LINE  from  CALIFOR2 115.00 to CALIFOR3 115.00  "1 "
0
#
#   Case Number 146
1  70074 70215  "1 "    0     # LINE  from  CALIFOR2 115.00 to HARRISPS 115.00  "1 "
0
#
#   Case Number 147
1  70087 70088  "1 "    0     # LINE  from  CAPHILL1 115.00 to CAPHILL2 115.00  "1 "
0
#
#   Case Number 148
1  70087 70215  "1 "    0     # LINE  from  CAPHILL1 115.00 to HARRISPS 115.00  "1 "
0
#
#   Case Number 149
1  70087 70300  "1 "    0     # LINE  from  CAPHILL1 115.00 to NORTH547 115.00  "1 "
0
#
#   Case Number 150
1  70088 70148  "1 "    0     # LINE  from  CAPHILL2 115.00 to DENVTM   115.00  "1 "
0
#
#   Case Number 151
1  70091 70117  "1 "    0     # LINE  from  CASTLRCK 115.00 to CROWFOOT 115.00  "1 "
0
```

```
#
#   Case Number 152
1  70091 70308  "1 "    0     # LINE  from  CASTLRCK 115.00 to PALMER   115.00  "1 "
0
#
#   Case Number 153
1  70091 70518  "1 "    0     # LINE  from  CASTLRCK 115.00 to BAYOU    115.00  "1 "
0
#
#   Case Number 154
1  70091 70520  "1 "    0     # LINE  from  CASTLRCK 115.00 to WOLFSBTP 115.00  "1 "
0
#
#   Case Number 155
1  70091 70584  "1 "    0     # LINE  from  CASTLRCK 115.00 to CRYSTVA  115.00  "1 "
0
#
#   Case Number 156
1  70093 70099  "1 "    0     # LINE  from  CF&IEAST 115.00 to CF&ISETP 115.00  "1 "
0
#
#   Case Number 157
1  70094 70122  "1 "    0     # LINE  from  CF&IFURN 230.00 to COMANCHE 230.00  "1 "
0
#
#   Case Number 158
1  70096 70099  "1 "    0     # LINE  from  CF&ISE1  115.00 to CF&ISETP 115.00  "1 "
0
#
#   Case Number 159
1  70098 70121  "1 "    0     # LINE  from  CF&ISE2  115.00 to COMANCHE 115.00  "1 "
0
#
#   Case Number 160
1  70099 70121  "1 "    0     # LINE  from  CF&ISETP 115.00 to COMANCHE 115.00  "1 "
0
#
#   Case Number 161
1  70100 70464  "1 "    0     # LINE  from  CHATFLD  230.00 to WATERTON 230.00  "1 "
0
#
#   Case Number 162
1  70107 70200  "1 "    0     # LINE  from  CHEROKEE 230.00 to GLENN PS 230.00  "1 "
0
#
#   Case Number 163
1  70107 70324  "1 "    0     # LINE  from  CHEROKEE 230.00 to LACOMBE  230.00  "1 "
0
#
#   Case Number 164
1  70107 70355  "1 "    0     # LINE  from  CHEROKEE 230.00 to RIDGE    230.00  "1 "
0
#
#   Case Number 165
1  70107 70362  "1 "    0     # LINE  from  CHEROKEE 230.00 to RIVERDAL 230.00  "1 "
0
#
#   Case Number 166
1  70107 70609  "1 "    0     # LINE  from  CHEROKEE 230.00 to SILVSADL 230.00  "1 "
0
#
#   Case Number 167
1  70108 70110  "1 "    0     # LINE  from  CHEROKEE 115.00 to TODD CRE 115.00  "1 "
0
#
#   Case Number 168
1  70108 70126  "1 "    0     # LINE  from  CHEROKEE 115.00 to CONOCO   115.00  "1 "
0
#
#   Case Number 169
1  70108 70153  "1 "    0     # LINE  from  CHEROKEE 115.00 to DERBY 1  115.00  "1 "
```

```
0
#
#   Case Number 170
1  70108 70154  "1 "    0     # LINE  from  CHEROKEE 115.00 to DERBY 2  115.00  "1 "
0
#
#   Case Number 171
1  70108 70174  "1 "    0     # LINE  from  CHEROKEE 115.00 to FEDERHT1 115.00  "1 "
0
#
#   Case Number 172
1  70108 70175  "2 "    0     # LINE  from  CHEROKEE 115.00 to FEDERHT2 115.00  "2 "
0
#
#   Case Number 173
1  70108 70276  "1 "    0     # LINE  from  CHEROKEE 115.00 to MAPLETO1 115.00  "1 "
0
#
#   Case Number 174
1  70108 70277  "1 "    0     # LINE  from  CHEROKEE 115.00 to MAPLETO2 115.00  "1 "
0
#
#   Case Number 175
1  70108 70298  "1 "    0     # LINE  from  CHEROKEE 115.00 to NORTH PS 115.00  "1 "
0
#
#   Case Number 176
1  70108 70299  "2 "    0     # LINE  from  CHEROKEE 115.00 to NORTH542 115.00  "2 "
0
#
#   Case Number 177
1  70112 70212  "1 "    0     # LINE  from  CLARK    230.00 to GREENWD  230.00  "1 "
0
#
#   Case Number 178
1  70112 70241  "1 "    0     # LINE  from  CLARK    230.00 to JORDAN   230.00  "1 "
0
#
#   Case Number 179
1  70115 70117  "1 "    0     # LINE  from  HPCYN    115.00 to CROWFOOT 115.00  "1 "
0
#
#   Case Number 180
1  70121 70412  "1 "    0     # LINE  from  COMANCHE 115.00 to STEM BCH 115.00  "1 "
0
#
#   Case Number 181
1  70122 70286  "1 "    0     # LINE  from  COMANCHE 230.00 to MIDWAYPS 230.00  "1 "
0
#
#   Case Number 182
1  70122 70286  "2 "    0     # LINE  from  COMANCHE 230.00 to MIDWAYPS 230.00  "2 "
0
#
#   Case Number 183
1  70122 70459  "1 "    0     # LINE  from  COMANCHE 230.00 to WALSENBG 230.00  "1 "
0
#
#   Case Number 184
1  70126 70377  "1 "    0     # LINE  from  CONOCO   115.00 to SANDOWN  115.00  "1 "
0
#
#   Case Number 185
1  70127 70191  "1 "    0     # LINE  from  COORSREC 115.00 to FTLUPTON 115.00  "1 "
0
#
#   Case Number 186
1  70127 70194  "1 "    0     # LINE  from  COORSREC 115.00 to FULTONTS 115.00  "1 "
0
#
#   Case Number 187
```

```
1  70138 70115  "1 "    0     # LINE  from  DANIELPK 115.00 to HPCYN    115.00  "1 "
0
#
#   Case Number 188
1  70139 70278  "1 "    0     # LINE  from  DANIELPK 230.00 to MARCY    230.00  "1 "
0
#
#   Case Number 189
1  70139 70284  "1 "    0     # LINE  from  DANIELPK 230.00 to SURREYRG 230.00  "1 "
0
#
#   Case Number 190
1  70139 70286  "1 "    0     # LINE  from  DANIELPK 230.00 to MIDWAYPS 230.00  "1 "
0
#
#   Case Number 191
1  70139 70311  "1 "    0     # LINE  from  DANIELPK 230.00 to PAWNEE   230.00  "1 "
0
#
#   Case Number 192
1  70139 70323  "1 "    0     # LINE  from  DANIELPK 230.00 to PRAIRIE2 230.00  "1 "
0
#
#   Case Number 193
1  70139 70331  "1 "    0     # LINE  from  DANIELPK 230.00 to PRAIRIE  230.00  "1 "
0
#
#   Case Number 194
1  70139 70427  "1 "    0     # LINE  from  DANIELPK 230.00 to TARRYALL 230.00  "1 "
0
#
#   Case Number 195
1  70139 70527  "1 "    0     # LINE  from  DANIELPK 230.00 to SANTEFE  230.00  "1 "
0
#
#   Case Number 196
1  70141 70149  "1 "    0     # LINE  from  DAKOTA   230.00 to DENVTM   230.00  "1 "
0
#
#   Case Number 197
1  70142 70400  "1 "    0     # LINE  from  DEERCREK 115.00 to SODALAKE 115.00  "1 "
0
#
#   Case Number 198
1  70142 70484  "1 "    0     # LINE  from  DEERCREK 115.00 to MARTN2TP 115.00  "1 "
0
#
#   Case Number 199
1  70144 70147  "1 "    0     # LINE  from  DENV12R   13.80 to DENVSYNC  13.80  "1 "
0
#
#   Case Number 200
1  70144 70150  "1 "    0     # LINE  from  DENV12R   13.80 to DENVTM1   13.80  "1 "
0
#
#   Case Number 201
1  70144 70151  "1 "    0     # LINE  from  DENV12R   13.80 to DENVTM2   13.80  "1 "
0
#
#   Case Number 202
1  70145 70150  "1 "    0     # LINE  from  DENV13R   13.80 to DENVTM1   13.80  "1 "
0
#
#   Case Number 203
1  70145 70152  "1 "    0     # LINE  from  DENV13R   13.80 to DENVTM3   13.80  "1 "
0
#
#   Case Number 204
1  70146 70151  "1 "    0     # LINE  from  DENV23R   13.80 to DENVTM2   13.80  "1 "
0
#
```

```
#   Case Number 205
1  70146 70152  "1 "    0     # LINE  from  DENV23R   13.80 to DENVTM3   13.80  "1 "
0
#
#   Case Number 206
1  70146 70479  "1 "    0     # LINE  from  DENV23R   13.80 to ZUNI2     13.80  "1 "
0
#
#   Case Number 207
1  70148 70173  "1 "    0     # LINE  from  DENVTM   115.00 to FEDCTRTP 115.00  "1 "
0
#
#   Case Number 208
1  70148 70208  "1 "    0     # LINE  from  DENVTM   115.00 to GRAY ST  115.00  "1 "
0
#
#   Case Number 209
1  70149 70177  "1 "    0     # LINE  from  DENVTM   230.00 to ELATI3   230.00  "1 "
0
#
#   Case Number 210
1  70149 70324  "1 "    0     # LINE  from  DENVTM   230.00 to LACOMBE  230.00  "1 "
0
#
#   Case Number 211
1  70149 70480  "1 "    0     # LINE  from  DENVTM   230.00 to WESTPS   230.00  "1 "
0
#
#   Case Number 212
1  70154 70216  "1 "    0     # LINE  from  DERBY 2  115.00 to HAVANA1  115.00  "1 "
0
#
#   Case Number 213
1  70157 70419  "1 "    0     # LINE  from  DIVIDE   115.00 to LKGRGE   115.00  "1 "
0
#
#   Case Number 214
1  70162 70430  "1 "    0     # LINE  from  EAST     115.00 to TOLGATE1 115.00  "1 "
0
#
#   Case Number 215
1  70162 70431  "1 "    0     # LINE  from  EAST     115.00 to TOLGATE2 115.00  "1 "
0
#
#   Case Number 216
1  70162 70537  "1 "    0     # LINE  from  EAST     115.00 to FITZSMNS 115.00  "1 "
0
#
#   Case Number 217
1  70162 70538  "1 "    0     # LINE  from  EAST     115.00 to CHAM48TH 115.00  "1 "
0
#
#   Case Number 218
1  70163 70170  "1 "    0     # LINE  from  ELATI1   230.00 to ELATI2   230.00  "1 "
0
#
#   Case Number 219
1  70163 70177  "1 "    0     # LINE  from  ELATI1   230.00 to ELATI3   230.00  "1 "
0
#
#   Case Number 220
1  70164 70322  "1 "    0     # LINE  from  ELDORADO 115.00 to PLAINVW  115.00  "1 "
0
#
#   Case Number 221
1  70164 70365  "1 "    0     # LINE  from  ELDORADO 115.00 to ROCKYFLA 115.00  "1 "
0
#
#   Case Number 222
1  70165 70168  "1 "    0     # LINE  from  ENGLE3TP 115.00 to ENGLEWD3 115.00  "1 "
0
```

```
#
#   Case Number 223
1  70165 70263  "1 "    0     # LINE  from  ENGLE3TP 115.00 to LITTLET1 115.00  "1 "
0
#
#   Case Number 224
1  70166 70167  "1 "    0     # LINE  from  ENGLEWD1 115.00 to ENGLEWD2 115.00  "1 "
0
#
#   Case Number 225
1  70166 70384  "1 "    0     # LINE  from  ENGLEWD1 115.00 to SHERIDAN 115.00  "1 "
0
#
#   Case Number 226
1  70167 70168  "1 "    0     # LINE  from  ENGLEWD2 115.00 to ENGLEWD3 115.00  "1 "
0
#
#   Case Number 227
1  70169 70234  "1 "    0     # LINE  from  ENNIS    115.00 to HUDSON   115.00  "1 "
0
#
#   Case Number 228
1  70170 70291  "1 "    0     # LINE  from  ELATI2   230.00 to MONROEPS 230.00  "1 "
0
#
#   Case Number 229
1  70172 70173  "1 "    0     # LINE  from  FED CNTR 115.00 to FEDCTRTP 115.00  "1 "
0
#
#   Case Number 230
1  70173 70342  "1 "    0     # LINE  from  FEDCTRTP 115.00 to QUAKERTP 115.00  "1 "
0
#
#   Case Number 231
1  70174 70382  "1 "    0     # LINE  from  FEDERHT1 115.00 to SEMPER   115.00  "1 "
0
#
#   Case Number 232
1  70191 70234  "1 "    0     # LINE  from  FTLUPTON 115.00 to HUDSON   115.00  "1 "
0
#
#   Case Number 233
1  70191 70307  "1 "    0     # LINE  from  FTLUPTON 115.00 to P.VALLEY 115.00  "1 "
0
#
#   Case Number 234
1  70191 70450  "1 "    0     # LINE  from  FTLUPTON 115.00 to VASQUEZ  115.00  "1 "
0
#
#   Case Number 235
1  70192 70311  "1 "    0     # LINE  from  FTLUPTON 230.00 to PAWNEE   230.00  "1 "
0
#
#   Case Number 236
1  70192 70410  "1 "    0     # LINE  from  FTLUPTON 230.00 to ST.VRAIN 230.00  "1 "
0
#
#   Case Number 237
1  70192 70410  "2 "    0     # LINE  from  FTLUPTON 230.00 to ST.VRAIN 230.00  "2 "
0
#
#   Case Number 238
1  70192 70529  "1 "    0     # LINE  from  FTLUPTON 230.00 to JLGREEN  230.00  "1 "
0
#
#   Case Number 239
1  70192 70605  "1 "    0     # LINE  from  FTLUPTON 230.00 to HENRYLAK 230.00  "1 "
0
#
#   Case Number 240
1  70198 70202  "1 "    0     # LINE  from  GILCREST 115.00 to GODFRETP 115.00  "1 "
```

```
0
#
#   Case Number 241
1  70198 70450  "1 "    0     # LINE  from  GILCREST 115.00 to VASQUEZ  115.00  "1 "
0
#
#   Case Number 242
1  70200 70461  "1 "    0     # LINE  from  GLENN PS 230.00 to WASHINGT 230.00  "1 "
0
#
#   Case Number 243
1  70202 70209  "1 "    0     # LINE  from  GODFRETP 115.00 to GREELEY  115.00  "1 "
0
#
#   Case Number 244
1  70202 70240  "1 "    0     # LINE  from  GODFRETP 115.00 to JOHNSTN  115.00  "1 "
0
#
#   Case Number 245
1  70208 70251  "1 "    0     # LINE  from  GRAY ST  115.00 to LAKEWOD1 115.00  "1 "
0
#
#   Case Number 246
1  70208 70252  "1 "    0     # LINE  from  GRAY ST  115.00 to LAKEWOD2 115.00  "1 "
0
#
#   Case Number 247
1  70208 70402  "1 "    0     # LINE  from  GRAY ST  115.00 to SOUTH 2  115.00  "1 "
0
#
#   Case Number 248
1  70209 70290  "1 "    0     # LINE  from  GREELEY  115.00 to MONFORT  115.00  "1 "
0
#
#   Case Number 249
1  70209 70470  "1 "    0     # LINE  from  GREELEY  115.00 to WELD  PS 115.00  "1 "
0
#
#   Case Number 250
1  70212 70323  "1 "    0     # LINE  from  GREENWD  230.00 to PRAIRIE2 230.00  "1 "
0
#
#   Case Number 251
1  70212 70331  "1 "    0     # LINE  from  GREENWD  230.00 to PRAIRIE  230.00  "1 "
0
#
#   Case Number 252
1  70212 70481  "1 "    0     # LINE  from  GREENWD  230.00 to MONACO12 230.00  "1 "
0
#
#   Case Number 253
1  70212 70482  "1 "    0     # LINE  from  GREENWD  230.00 to MONACO 3 230.00  "1 "
0
#
#   Case Number 254
1  70215 70259  "1 "    0     # LINE  from  HARRISPS 115.00 to LEETSDAL 115.00  "1 "
0
#
#   Case Number 255
1  70216 70538  "1 "    0     # LINE  from  HAVANA1  115.00 to CHAM48TH 115.00  "1 "
0
#
#   Case Number 256
1  70217 70538  "1 "    0     # LINE  from  HAVANA2  115.00 to CHAM48TH 115.00  "1 "
0
#
#   Case Number 257
1  70224 70265  "1 "    0     # LINE  from  HOGBACK  115.00 to LOOKOUT  115.00  "1 "
0
#
#   Case Number 258
```

```
1  70224 70400  "1 "    0     # LINE  from  HOGBACK  115.00 to SODALAKE 115.00  "1 "
0
#
#   Case Number 259
1  70238 70255  "1 "    0     # LINE  from  IDEALCEM  46.00 to LAPORTE   46.00  "1 "
0
#
#   Case Number 260
1  70239 70260  "1 "    0     # LINE  from  JEWELL2  230.00 to LEETSDAL 230.00  "1 "
0
#
#   Case Number 261
1  70239 70491  "1 "    0     # LINE  from  JEWELL2  230.00 to TOLGATE  230.00  "1 "
0
#
#   Case Number 262
1  70240 70470  "1 "    0     # LINE  from  JOHNSTN  115.00 to WELD  PS 115.00  "1 "
0
#
#   Case Number 263
1  70241 70313  "1 "    0     # LINE  from  JORDAN   230.00 to ORCHARD  230.00  "1 "
0
#
#   Case Number 264
1  70251 70354  "1 "    0     # LINE  from  LAKEWOD1 115.00 to RIDGE    115.00  "1 "
0
#
#   Case Number 265
1  70252 70354  "1 "    0     # LINE  from  LAKEWOD2 115.00 to RIDGE    115.00  "1 "
0
#
#   Case Number 266
1  70259 70377  "1 "    0     # LINE  from  LEETSDAL 115.00 to SANDOWN  115.00  "1 "
0
#
#   Case Number 267
1  70259 70443  "1 "    0     # LINE  from  LEETSDAL 115.00 to UNIVRSTP 115.00  "1 "
0
#
#   Case Number 268
1  70260 70291  "1 "    0     # LINE  from  LEETSDAL 230.00 to MONROEPS 230.00  "1 "
0
#
#   Case Number 269
1  70260 70481  "1 "    0     # LINE  from  LEETSDAL 230.00 to MONACO12 230.00  "1 "
0
#
#   Case Number 270
1  70262 70322  "1 "    0     # LINE  from  LEYDEN   115.00 to PLAINVW  115.00  "1 "
0
#
#   Case Number 271
1  70263 70264  "1 "    0     # LINE  from  LITTLET1 115.00 to LITTLET2 115.00  "1 "
0
#
#   Case Number 272
1  70264 70483  "1 "    0     # LINE  from  LITTLET2 115.00 to MARTN1TP 115.00  "1 "
0
#
#   Case Number 273
1  70265 70342  "1 "    0     # LINE  from  LOOKOUT  115.00 to QUAKERTP 115.00  "1 "
0
#
#   Case Number 274
1  70266 70355  "1 "    0     # LINE  from  LOOKOUT  230.00 to RIDGE    230.00  "1 "
0
#
#   Case Number 275
1  70266 70480  "1 "    0     # LINE  from  LOOKOUT  230.00 to WESTPS   230.00  "1 "
0
#
```

```
#   Case Number 276
1  70266 70570  "1 "    0     # LINE  from  LOOKOUT  230.00 to PLNENDSS 230.00  "1 "
0
#
#   Case Number 277
1  70266 70570  "2 "    0     # LINE  from  LOOKOUT  230.00 to PLNENDSS 230.00  "2 "
0
#
#   Case Number 278
1  70272 70321  "1 "    0     # LINE  from  LUDLOTAP 115.00 to PINONCYN 115.00  "1 "
0
#
#   Case Number 279
1  70272 70458  "1 "    0     # LINE  from  LUDLOTAP 115.00 to WALSENBG 115.00  "1 "
0
#
#   Case Number 280
1  70276 70300  "1 "    0     # LINE  from  MAPLETO1 115.00 to NORTH547 115.00  "1 "
0
#
#   Case Number 281
1  70277 70377  "1 "    0     # LINE  from  MAPLETO2 115.00 to SANDOWN  115.00  "1 "
0
#
#   Case Number 282
1  70278 70464  "1 "    0     # LINE  from  MARCY    230.00 to WATERTON 230.00  "1 "
0
#
#   Case Number 283
1  70279 70280  "1 "    0     # LINE  from  MARTIN 1 115.00 to MARTIN 2 115.00  "1 "
0
#
#   Case Number 284
1  70279 70483  "1 "    0     # LINE  from  MARTIN 1 115.00 to MARTN1TP 115.00  "1 "
0
#
#   Case Number 285
1  70280 70484  "1 "    0     # LINE  from  MARTIN 2 115.00 to MARTN2TP 115.00  "1 "
0
#
#   Case Number 286
1  70283 70313  "1 "    0     # LINE  from  MEADOWHL 230.00 to ORCHARD  230.00  "1 "
0
#
#   Case Number 287
1  70283 70396  "1 "    0     # LINE  from  MEADOWHL 230.00 to SMOKYHIL 230.00  "1 "
0
#
#   Case Number 288
1  70284 70533  "1 "    0     # LINE  from  SURREYRG 230.00 to LEMON    230.00  "1 "
0
#
#   Case Number 289
1  70290 70439  "1 "    0     # LINE  from  MONFORT  115.00 to UNC      115.00  "1 "
0
#
#   Case Number 290
1  70298 70377  "1 "    0     # LINE  from  NORTH PS 115.00 to SANDOWN  115.00  "1 "
0
#
#   Case Number 291
1  70307 70110  "1 "    0     # LINE  from  P.VALLEY 115.00 to TODD CRE 115.00  "1 "
0
#
#   Case Number 292
1  70308 70582  "1 "    0     # LINE  from  PALMER   115.00 to GREENLND 115.00  "1 "
0
#
#   Case Number 293
1  70308 73414  "1 "    0     # LINE  from  PALMER   115.00 to MONUMENT 115.00  "1 "
0
```

```
#
#   Case Number 294
1  70311 70545  "1 "    0     # LINE  from  PAWNEE   230.00 to BRICKCTR 230.00  "1 "
0
#
#   Case Number 295
1  70311 70711  "1 "    0     # LINE  from  PAWNEE   230.00 to PTZLOGN  230.00  "1 "
0
#
#   Case Number 296
1  70335 70336  "1 "    0     # LINE  from  PUEB W   115.00 to PUEB-TAP 115.00  "1 "
0
#
#   Case Number 297
1  70336 70412  "1 "    0     # LINE  from  PUEB-TAP 115.00 to STEM BCH 115.00  "1 "
0
#
#   Case Number 298
1  70340 70341  "1 "    0     # LINE  from  QUAKER1  115.00 to QUAKER2  115.00  "1 "
0
#
#   Case Number 299
1  70341 70342  "1 "    0     # LINE  from  QUAKER2  115.00 to QUAKERTP 115.00  "1 "
0
#
#   Case Number 300
1  70343 70396  "1 "    0     # LINE  from  QUINCY   230.00 to SMOKYHIL 230.00  "1 "
0
#
#   Case Number 301
1  70343 70545  "1 "    0     # LINE  from  QUINCY   230.00 to BRICKCTR 230.00  "1 "
0
#
#   Case Number 302
1  70345 70354  "1 "    0     # LINE  from  RALSTON1 115.00 to RIDGE    115.00  "1 "
0
#
#   Case Number 303
1  70345 70444  "1 "    0     # LINE  from  RALSTON1 115.00 to VALMONT  115.00  "1 "
0
#
#   Case Number 304
1  70346 70354  "1 "    0     # LINE  from  RALSTON2 115.00 to RIDGE    115.00  "1 "
0
#
#   Case Number 305
1  70346 70365  "1 "    0     # LINE  from  RALSTON2 115.00 to ROCKYFLA 115.00  "1 "
0
#
#   Case Number 306
1  70354 70369  "1 "    0     # LINE  from  RIDGE    115.00 to RUSSELL  115.00  "1 "
0
#
#   Case Number 307
1  70362 70605  "1 "    0     # LINE  from  RIVERDAL 230.00 to HENRYLAK 230.00  "1 "
0
#
#   Case Number 308
1  70368 70439  "1 "    0     # LINE  from  ROSEDALE 115.00 to UNC      115.00  "1 "
0
#
#   Case Number 309
1  70368 70475  "1 "    0     # LINE  from  ROSEDALE 115.00 to ARROWHLK 115.00  "1 "
0
#
#   Case Number 310
1  70381 70514  "1 "    0     # LINE  from  SEDALIA  115.00 to PLUMCRK  115.00  "1 "
0
#
#   Case Number 311
1  70381 70522  "1 "    0     # LINE  from  SEDALIA  115.00 to ROXBOROU 115.00  "1 "
```

```
0
#
#   Case Number 312
1  70392 70528  "1 "    0     # LINE  from  SKYRANCH 230.00 to SPRUCE   230.00  "1 "
0
#
#   Case Number 313
1  70393 70526  "1 "    0     # LINE  from  SKYRANCT 230.00 to IMBODEN  230.00  "1 "
0
#
#   Case Number 314
1  70393 70528  "1 "    0     # LINE  from  SKYRANCT 230.00 to SPRUCE   230.00  "1 "
0
#
#   Case Number 315
1  70395 70416  "1 "    0     # LINE  from  SMOKYHIL 115.00 to STRASBRG 115.00  "1 "
0
#
#   Case Number 316
1  70395 70430  "1 "    0     # LINE  from  SMOKYHIL 115.00 to TOLGATE1 115.00  "1 "
0
#
#   Case Number 317
1  70395 70431  "1 "    0     # LINE  from  SMOKYHIL 115.00 to TOLGATE2 115.00  "1 "
0
#
#   Case Number 318
1  70395 70521  "1 "    0     # LINE  from  SMOKYHIL 115.00 to PEAKVIEW 115.00  "1 "
0
#
#   Case Number 319
1  70396 70528  "2 "    0     # LINE  from  SMOKYHIL 230.00 to SPRUCE   230.00  "2 "
0
#
#   Case Number 320
1  70396 70532  "1 "    0     # LINE  from  SMOKYHIL 230.00 to POWHATON 230.00  "1 "
0
#
#   Case Number 321
1  70396 70551  "1 "    0     # LINE  from  SMOKYHIL 230.00 to MURPHY   230.00  "1 "
0
#
#   Case Number 322
1  70397 73020  "1 "    0     # LINE  from  B.CK PS  115.00 to BEAVERCK 115.00  "1 "
0
#
#   Case Number 323
1  70398 70401  "1 "    0     # LINE  from  SOUTH1TP 115.00 to SOUTH 1  115.00  "1 "
0
#
#   Case Number 324
1  70402 70531  "1 "    0     # LINE  from  SOUTH 2  115.00 to AIR LIQ  115.00  "1 "
0
#
#   Case Number 325
1  70410 70471  "1 "    0     # LINE  from  ST.VRAIN 230.00 to WELD  PS 230.00  "1 "
0
#
#   Case Number 326
1  70410 70474  "1 "    0     # LINE  from  ST.VRAIN 230.00 to WINDSOR  230.00  "1 "
0
#
#   Case Number 327
1  70410 70544  "1 "    0     # LINE  from  ST.VRAIN 230.00 to ISABELLE 230.00  "1 "
0
#
#   Case Number 328
1  70410 70592  "1 "    0     # LINE  from  ST.VRAIN 230.00 to SPNDLE   230.00  "1 "
0
#
#   Case Number 329
```

```
1  70410 73562  "1 "    0     # LINE  from  ST.VRAIN 230.00 to FORDHAM  230.00  "1 "
0
#
#   Case Number 330
1  70412 70458  "1 "    0     # LINE  from  STEM BCH 115.00 to WALSENBG 115.00  "1 "
0
#
#   Case Number 331
1  70412 70458  "2 "    0     # LINE  from  STEM BCH 115.00 to WALSENBG 115.00  "2 "
0
#
#   Case Number 332
1  70416 70547  "1 "    0     # LINE  from  STRASBRG 115.00 to BENNET   115.00  "1 "
0
#
#   Case Number 333
1  70417 70428  "1 "    0     # LINE  from  SULLIVN  230.00 to TECH CTR 230.00  "1 "
0
#
#   Case Number 334
1  70417 70512  "1 "    0     # LINE  from  SULLIVN  230.00 to JEWELL1  230.00  "1 "
0
#
#   Case Number 335
1  70426 70419  "1 "    0     # LINE  from  TARRYALL 115.00 to LKGRGE   115.00  "1 "
0
#
#   Case Number 336
1  70428 70482  "1 "    0     # LINE  from  TECH CTR 230.00 to MONACO 3 230.00  "1 "
0
#
#   Case Number 337
1  70432 70530  "1 "    0     # LINE  from  TOWER    230.00 to PICADIL  230.00  "1 "
0
#
#   Case Number 338
1  70432 70539  "1 "    0     # LINE  from  TOWER    230.00 to CHAM48TH 230.00  "1 "
0
#
#   Case Number 339
1  70441 70442  "1 "    0     # LINE  from  UNIVERS1 115.00 to UNIVERS2 115.00  "1 "
0
#
#   Case Number 340
1  70441 70443  "1 "    0     # LINE  from  UNIVERS1 115.00 to UNIVRSTP 115.00  "1 "
0
#
#   Case Number 341
1  70459 12101  "1 "    0     # LINE  from  WALSENBG 230.00 to GLADSTON 230.00  "1 "
0
#
#   Case Number 342
1  70461 70529  "1 "    0     # LINE  from  WASHINGT 230.00 to JLGREEN  230.00  "1 "
0
#
#   Case Number 343
1  70463 70483  "1 "    0     # LINE  from  WATERTON 115.00 to MARTN1TP 115.00  "1 "
0
#
#   Case Number 344
1  70463 70484  "1 "    0     # LINE  from  WATERTON 115.00 to MARTN2TP 115.00  "1 "
0
#
#   Case Number 345
1  70463 70522  "1 "    0     # LINE  from  WATERTON 115.00 to ROXBOROU 115.00  "1 "
0
#
#   Case Number 346
1  70470 70475  "1 "    0     # LINE  from  WELD  PS 115.00 to ARROWHLK 115.00  "1 "
0
#
```

```
#   Case Number 347
1  70514 70520  "1 "    0     # LINE  from  PLUMCRK  115.00 to WOLFSBTP 115.00  "1 "
0
#
#   Case Number 348
1  70515 70516  "1 "    0     # LINE  from  DAVIDSON 115.00 to PONDERSA 115.00  "1 "
0
#
#   Case Number 349
1  70515 70521  "1 "    0     # LINE  from  DAVIDSON 115.00 to PEAKVIEW 115.00  "1 "
0
#
#   Case Number 350
1  70516 70581  "1 "    0     # LINE  from  PONDERSA 115.00 to GRNDVIEW 115.00  "1 "
0
#
#   Case Number 351
1  70517 70518  "1 "    0     # LINE  from  PARKERPS 115.00 to BAYOU    115.00  "1 "
0
#
#   Case Number 352
1  70517 70523  "1 "    0     # LINE  from  PARKERPS 115.00 to SULPHUR  115.00  "1 "
0
#
#   Case Number 353
1  70517 70523  "2 "    0     # LINE  from  PARKERPS 115.00 to SULPHUR  115.00  "2 "
0
#
#   Case Number 354
1  70517 70581  "1 "    0     # LINE  from  PARKERPS 115.00 to GRNDVIEW 115.00  "1 "
0
#
#   Case Number 355
1  70518 70583  "1 "    0     # LINE  from  BAYOU    115.00 to ELIZABTH 115.00  "1 "
0
#
#   Case Number 356
1  70519 70520  "1 "    0     # LINE  from  WOLFSBRG 115.00 to WOLFSBTP 115.00  "1 "
0
#
#   Case Number 357
1  70524 70513  "1 "    0     # LINE  from  SULPHUR  230.00 to HOMESTEA 230.00  "1 "
0
#
#   Case Number 358
1  70524 70533  "1 "    0     # LINE  from  SULPHUR  230.00 to LEMON    230.00  "1 "
0
#
#   Case Number 359
1  70528 70530  "1 "    0     # LINE  from  SPRUCE   230.00 to PICADIL  230.00  "1 "
0
#
#   Case Number 360
1  70528 70532  "1 "    0     # LINE  from  SPRUCE   230.00 to POWHATON 230.00  "1 "
0
#
#   Case Number 361
1  70528 70539  "1 "    0     # LINE  from  SPRUCE   230.00 to CHAM48TH 230.00  "1 "
0
#
#   Case Number 362
1  70537 70538  "1 "    0     # LINE  from  FITZSMNS 115.00 to CHAM48TH 115.00  "1 "
0
#
#   Case Number 363
1  70543 70570  "1 "    0     # LINE  from  SIMMS    230.00 to PLNENDSS 230.00  "1 "
0
#
#   Case Number 364
1  70546 70547  "1 "    0     # LINE  from  BRICKCTR 115.00 to BENNET   115.00  "1 "
0
```

```
#
#   Case Number 365
1  70551 70513  "1 "    0     # LINE  from  MURPHY   230.00 to HOMESTEA 230.00  "1 "
0
#
#   Case Number 366
1  70582 70584  "1 "    0     # LINE  from  GREENLND 115.00 to CRYSTVA  115.00  "1 "
0
#
#   Case Number 367
1  70590 70820  "1 "    0     # LINE  from  RMEC     230.00 to KEENSBG  230.00  "1 "
0
#
#   Case Number 368
1  70601 70630  "1 "    0     # LINE  from  DANIELPK 345.00 to SQUIRLCR 345.00  "1 "
0
#
#   Case Number 369
1  70606 70607  "1 "    0     # LINE  from  HENRYLAK 115.00 to BROMLEY  115.00  "1 "
0
#
#   Case Number 370
1  70609 70610  "1 "    0     # LINE  from  SILVSADL 230.00 to REUNION  230.00  "1 "
0
#
#   Case Number 371
1  70611 70612  "1 "    0     # LINE  from  REUNION  115.00 to PRARI TS 115.00  "1 "
0
#
#   Case Number 372
1  70654 70601  "2 "    0     # LINE  from  COMAN 3  345.00 to DANIELPK 345.00  "2 "
0
#
#   Case Number 373
1  70654 70630  "1 "    0     # LINE  from  COMAN 3  345.00 to SQUIRLCR 345.00  "1 "
0
#
#   Case Number 374
1  70820 70821  "1 "    0     # LINE  from  KEENSBG  230.00 to CEDARCRK 230.00  "1 "
0
#
#   Case Number 375
1  73003 73020  "1 "    0     # LINE  from  AKRON    115.00 to BEAVERCK 115.00  "1 "
0
#
#   Case Number 376
1  73003 73372  "1 "    0     # LINE  from  AKRON    115.00 to OTIS LM  115.00  "1 "
0
#
#   Case Number 377
1  73003 94200  "1 "    0     # LINE  from  AKRON    115.00 to 2004G2   115.00  "1 "
0
#
#   Case Number 378
1  73005 73175  "1 "    0     # LINE  from  ALVIN    115.00 to SANDHILL 115.00  "1 "
0
#
#   Case Number 379
1  73005 73210  "1 "    0     # LINE  from  ALVIN    115.00 to WAUNETA  115.00  "1 "
0
#
#   Case Number 380
1  73005 73304  "1 "    0     # LINE  from  ALVIN    115.00 to CRETESWT 115.00  "1 "
0
#
#   Case Number 381
1  73006 73010  "1 "    0     # LINE  from  ANTON    115.00 to ARICKARE 115.00  "1 "
0
#
#   Case Number 382
1  73006 73125  "1 "    0     # LINE  from  ANTON    115.00 to LSCHANCE 115.00  "1 "
```

```
0
#
#   Case Number 383
1  73007 73207  "1 "    0     # LINE  from  ARAPASUB 115.00 to WAANIBE  115.00  "1 "
0
#
#   Case Number 384
1  73010 73094  "1 "    0     # LINE  from  ARICKARE 115.00 to JOES     115.00  "1 "
0
#
#   Case Number 385
1  73011 70474  "1 "    0     # LINE  from  AULT     230.00 to WINDSOR  230.00  "1 "
0
#
#   Case Number 386
1  73015 73020  "1 "    0     # LINE  from  B.CK TRI 115.00 to BEAVERCK 115.00  "1 "
0
#
#   Case Number 387
1  73016 73192  "1 "    0     # LINE  from  B.CK TRI 230.00 to STORY    230.00  "1 "
0
#
#   Case Number 388
1  73017 73125  "1 "    0     # LINE  from  B.SANDY  115.00 to LSCHANCE 115.00  "1 "
0
#
#   Case Number 389
1  73017 73318  "1 "    0     # LINE  from  B.SANDY  115.00 to LIMON    115.00  "1 "
0
#
#   Case Number 390
1  73017 94400  "1 "    0     # LINE  from  B.SANDY  115.00 to 2004G4   115.00  "1 "
0
#
#   Case Number 391
1  73018 73036  "1 "    0     # LINE  from  B.SANDY  230.00 to BURLNGTN 230.00  "1 "
0
#
#   Case Number 392
1  73018 73531  "1 "    0     # LINE  from  B.SANDY  230.00 to LINCOLNT 230.00  "1 "
0
#
#   Case Number 393
1  73018 73999  "1 "    0     # LINE  from  B.SANDY  230.00 to TI041103 230.00  "1 "
0
#
#   Case Number 394
1  73020 73031  "1 "    0     # LINE  from  BEAVERCK 115.00 to BRUSHTAP 115.00  "1 "
0
#
#   Case Number 395
1  73020 73065  "1 "    0     # LINE  from  BEAVERCK 115.00 to GARY     115.00  "1 "
0
#
#   Case Number 396
1  73020 73136  "1 "    0     # LINE  from  BEAVERCK 115.00 to MESSEX   115.00  "1 "
0
#
#   Case Number 397
1  73020 73464  "1 "    0     # LINE  from  BEAVERCK 115.00 to ADENA    115.00  "1 "
0
#
#   Case Number 398
1  73023 73097  "1 "    0     # LINE  from  BIJOUTAP 115.00 to KIOWA CK 115.00  "1 "
0
#
#   Case Number 399
1  73023 73379  "1 "    0     # LINE  from  BIJOUTAP 115.00 to FMWEST   115.00  "1 "
0
#
#   Case Number 400
```

```
1  73025 73035  "1 "    0     # LINE  from  BONNY CK 115.00 to BURLNGTN 115.00  "1 "
0
#
#   Case Number 401
1  73025 73185  "1 "    0     # LINE  from  BONNY CK 115.00 to SO. FORK 115.00  "1 "
0
#
#   Case Number 402
1  73030 73493  "1 "    0     # LINE  from  BRIGHTNW 115.00 to SANDCRK  115.00  "1 "
0
#
#   Case Number 403
1  73030 73503  "1 "    0     # LINE  from  BRIGHTNW 115.00 to ERIE SW  115.00  "1 "
0
#
#   Case Number 404
1  73031 73305  "1 "    0     # LINE  from  BRUSHTAP 115.00 to EFMORGTP 115.00  "1 "
0
#
#   Case Number 405
1  73034 73209  "1 "    0     # LINE  from  BURL PSC 115.00 to WANIBETP 115.00  "1 "
0
#
#   Case Number 406
1  73034 73485  "1 "    0     # LINE  from  BURL PSC 115.00 to BURL KC  115.00  "1 "
0
#
#   Case Number 407
1  73035 73485  "1 "    0     # LINE  from  BURLNGTN 115.00 to BURL KC  115.00  "1 "
0
#
#   Case Number 408
1  73036 73900  "1 "    0     # LINE  from  BURLNGTN 230.00 to TI06929A 230.00  "1 "
0
#
#   Case Number 409
1  73047 73053  "1 "    0     # LINE  from  DEERINGL 115.00 to ECKLEY   115.00  "1 "
0
#
#   Case Number 410
1  73047 73142  "1 "    0     # LINE  from  DEERINGL 115.00 to N.YUMA   115.00  "1 "
0
#
#   Case Number 411
1  73047 73230  "1 "    0     # LINE  from  DEERINGL 115.00 to YUMA     115.00  "1 "
0
#
#   Case Number 412
1  73047 73372  "1 "    0     # LINE  from  DEERINGL 115.00 to OTIS LM  115.00  "1 "
0
#
#   Case Number 413
1  73047 99560  "1 "    0     # LINE  from  DEERINGL 115.00 to 05T606T2 115.00  "1 "
0
#
#   Case Number 414
1  73049 73501  "1 "    0     # LINE  from  DELCAMIN 115.00 to RINNVALL 115.00  "1 "
0
#
#   Case Number 415
1  73053 73225  "1 "    0     # LINE  from  ECKLEY   115.00 to WRAY TAP 115.00  "1 "
0
#
#   Case Number 416
1  73053 73326  "1 "    0     # LINE  from  ECKLEY   115.00 to ROBB     115.00  "1 "
0
#
#   Case Number 417
1  73053 73371  "1 "    0     # LINE  from  ECKLEY   115.00 to BETHELLM 115.00  "1 "
0
#
```

```
#   Case Number 418
1  73053 99560  "1 "    0     # LINE  from  ECKLEY   115.00 to 05T606T2 115.00  "1 "
0
#
#   Case Number 419
1  73059 73080  "1 "    0     # LINE  from  FLEMING  115.00 to HAXTUN   115.00  "1 "
0
#
#   Case Number 420
1  73059 73478  "1 "    0     # LINE  from  FLEMING  115.00 to GALIEN   115.00  "1 "
0
#
#   Case Number 421
1  73059 95100  "1 "    0     # LINE  from  FLEMING  115.00 to 2005G1   115.00  "1 "
0
#
#   Case Number 422
1  73063 73080  "1 "    0     # LINE  from  FRENCHCK 115.00 to HAXTUN   115.00  "1 "
0
#
#   Case Number 423
1  73063 73210  "1 "    0     # LINE  from  FRENCHCK 115.00 to WAUNETA  115.00  "1 "
0
#
#   Case Number 424
1  73063 94800  "1 "    0     # LINE  from  FRENCHCK 115.00 to 2004G8   115.00  "1 "
0
#
#   Case Number 425
1  73065 73221  "1 "    0     # LINE  from  GARY     115.00 to WOODROW  115.00  "1 "
0
#
#   Case Number 426
1  73080 95100  "1 "    0     # LINE  from  HAXTUN   115.00 to 2005G1   115.00  "1 "
0
#
#   Case Number 427
1  73083 73084  "1 "    0     # LINE  from  HELL CK  115.00 to HELL TAP 115.00  "1 "
0
#
#   Case Number 428
1  73083 73174  "1 "    0     # LINE  from  HELL CK  115.00 to SAGEBRSH 115.00  "1 "
0
#
#   Case Number 429
1  73084 73110  "1 "    0     # LINE  from  HELL TAP 115.00 to LIBERTY  115.00  "1 "
0
#
#   Case Number 430
1  73084 73185  "1 "    0     # LINE  from  HELL TAP 115.00 to SO. FORK 115.00  "1 "
0
#
#   Case Number 431
1  73088 73103  "1 "    0     # LINE  from  HOYT     115.00 to L.MEADOW 115.00  "1 "
0
#
#   Case Number 432
1  73088 73464  "1 "    0     # LINE  from  HOYT     115.00 to ADENA    115.00  "1 "
0
#
#   Case Number 433
1  73088 73493  "1 "    0     # LINE  from  HOYT     115.00 to SANDCRK  115.00  "1 "
0
#
#   Case Number 434
1  73091 73185  "1 "    0     # LINE  from  IDALIA   115.00 to SO. FORK 115.00  "1 "
0
#
#   Case Number 435
1  73091 73206  "1 "    0     # LINE  from  IDALIA   115.00 to VERNONTP 115.00  "1 "
0
```

```
#
#   Case Number 436
1  73094 73110  "1 "    0     # LINE  from  JOES     115.00 to LIBERTY  115.00  "1 "
0
#
#   Case Number 437
1  73095 73158  "1 "    0     # LINE  from  KERSEYTP 115.00 to PROSPEC  115.00  "1 "
0
#
#   Case Number 438
1  73097 73147  "1 "    0     # LINE  from  KIOWA CK 115.00 to ORCHARD  115.00  "1 "
0
#
#   Case Number 439
1  73097 73158  "1 "    0     # LINE  from  KIOWA CK 115.00 to PROSPEC  115.00  "1 "
0
#
#   Case Number 440
1  73097 73213  "1 "    0     # LINE  from  KIOWA CK 115.00 to WIGGINS  115.00  "1 "
0
#
#   Case Number 441
1  73103 73213  "1 "    0     # LINE  from  L.MEADOW 115.00 to WIGGINS  115.00  "1 "
0
#
#   Case Number 442
1  73105 70256  "1 "    0     # LINE  from  LAPORTE  115.00 to LAPORTPS 115.00  "1 "
0
#
#   Case Number 443
1  73117 73370  "1 "    0     # LINE  from  LOST CK  115.00 to LOSTCKTP 115.00  "1 "
0
#
#   Case Number 444
1  73125 73194  "1 "    0     # LINE  from  LSCHANCE 115.00 to SWOODROW 115.00  "1 "
0
#
#   Case Number 445
1  73136 73191  "1 "    0     # LINE  from  MESSEX   115.00 to STERLING 115.00  "1 "
0
#
#   Case Number 446
1  73142 73166  "1 "    0     # LINE  from  N.YUMA   115.00 to REDWILLW 115.00  "1 "
0
#
#   Case Number 447
1  73143 73192  "1 "    0     # LINE  from  N.YUMA   230.00 to STORY    230.00  "1 "
0
#
#   Case Number 448
1  73143 73224  "1 "    0     # LINE  from  N.YUMA   230.00 to WRAY     230.00  "1 "
0
#
#   Case Number 449
1  73143 73579  "1 "    0     # LINE  from  N.YUMA   230.00 to SPRNGCAN 230.00  "1 "
0
#
#   Case Number 450
1  73150 70722  "1 "    0     # LINE  from  PEETZ    115.00 to RDGCREST 115.00  "1 "
0
#
#   Case Number 451
1  73150 73179  "1 "    0     # LINE  from  PEETZ    115.00 to SIDNEY   115.00  "1 "
0
#
#   Case Number 452
1  73150 73191  "1 "    0     # LINE  from  PEETZ    115.00 to STERLING 115.00  "1 "
0
#
#   Case Number 453
1  73158 73370  "1 "    0     # LINE  from  PROSPEC  115.00 to LOSTCKTP 115.00  "1 "
```

```
0
#
#   Case Number 454
1  73159 73370  "1 "    0     # LINE  from  PROSPVAL 115.00 to LOSTCKTP 115.00  "1 "
0
#
#   Case Number 455
1  73159 73493  "1 "    0     # LINE  from  PROSPVAL 115.00 to SANDCRK  115.00  "1 "
0
#
#   Case Number 456
1  73166 73208  "1 "    0     # LINE  from  REDWILLW 115.00 to WAGES    115.00  "1 "
0
#
#   Case Number 457
1  73175 73223  "1 "    0     # LINE  from  SANDHILL 115.00 to WRAY     115.00  "1 "
0
#
#   Case Number 458
1  73184 73209  "1 "    0     # LINE  from  SMOKYHLW 115.00 to WANIBETP 115.00  "1 "
0
#
#   Case Number 459
1  73191 73478  "1 "    0     # LINE  from  STERLING 115.00 to GALIEN   115.00  "1 "
0
#
#   Case Number 460
1  73192 70311  "1 "    0     # LINE  from  STORY    230.00 to PAWNEE   230.00  "1 "
0
#
#   Case Number 461
1  73192 70399  "1 "    0     # LINE  from  STORY    230.00 to B.CK PS  230.00  "1 "
0
#
#   Case Number 462
1  73194 73221  "1 "    0     # LINE  from  SWOODROW 115.00 to WOODROW  115.00  "1 "
0
#
#   Case Number 463
1  73206 73223  "1 "    0     # LINE  from  VERNONTP 115.00 to WRAY     115.00  "1 "
0
#
#   Case Number 464
1  73207 73209  "1 "    0     # LINE  from  WAANIBE  115.00 to WANIBETP 115.00  "1 "
0
#
#   Case Number 465
1  73208 73210  "1 "    0     # LINE  from  WAGES    115.00 to WAUNETA  115.00  "1 "
0
#
#   Case Number 466
1  73210 94800  "1 "    0     # LINE  from  WAUNETA  115.00 to 2004G8   115.00  "1 "
0
#
#   Case Number 467
1  73223 73225  "1 "    0     # LINE  from  WRAY     115.00 to WRAY TAP 115.00  "1 "
0
#
#   Case Number 468
1  73225 73331  "1 "    0     # LINE  from  WRAY TAP 115.00 to WRAYWAPA 115.00  "1 "
0
#
#   Case Number 469
1  73305 73309  "1 "    0     # LINE  from  EFMORGTP 115.00 to BARLOW   115.00  "1 "
0
#
#   Case Number 470
1  73305 73378  "1 "    0     # LINE  from  EFMORGTP 115.00 to FMN      115.00  "1 "
0
#
#   Case Number 471
```

```
1  73305 73379  "1 "    0     # LINE  from  EFMORGTP 115.00 to FMWEST   115.00  "1 "
0
#
#   Case Number 472
1  73309 73310  "1 "    0     # LINE  from  BARLOW   115.00 to FME      115.00  "1 "
0
#
#   Case Number 473
1  73310 73377  "1 "    0     # LINE  from  FME      115.00 to EXCEL    115.00  "1 "
0
#
#   Case Number 474
1  73311 73377  "1 "    0     # LINE  from  FMS      115.00 to EXCEL    115.00  "1 "
0
#
#   Case Number 475
1  73311 73379  "1 "    0     # LINE  from  FMS      115.00 to FMWEST   115.00  "1 "
0
#
#   Case Number 476
1  73371 73374  "1 "    0     # LINE  from  BETHELLM 115.00 to VERNONLM 115.00  "1 "
0
#
#   Case Number 477
1  73379 99630  "1 "    0     # LINE  from  FMWEST   115.00 to 2006T3   115.00  "1 "
0
#
#   Case Number 478
1  73413 70286  "1 "    0     # LINE  from  MIDWAYBR 230.00 to MIDWAYPS 230.00  "1 "
0
#
#   Case Number 479
1  73413 73531  "1 "    0     # LINE  from  MIDWAYBR 230.00 to LINCOLNT 230.00  "1 "
#3  73998    0  "1 "     0     # GEN  TI041103  34.50   "1 "
0
#
#   Case Number 480
1  73477 70139  "1 "    0     # LINE  from  FULLER   230.00 to DANIELPK 230.00  "1 "
0
#
#   Case Number 481
1  73501 73502  "1 "    0     # LINE  from  RINNVALL 115.00 to DACONO   115.00  "1 "
0
#
#   Case Number 482
1  73502 73503  "1 "    0     # LINE  from  DACONO   115.00 to ERIE SW  115.00  "1 "
0
#
#   Case Number 483
1  94401 94411  "1 "    0     # LINE  from  2004G4    34.50 to 2004G4C1  34.50  "1 "
0
#
#   Case Number 484
1  94401 94412  "1 "    0     # LINE  from  2004G4    34.50 to 2004G4C2  34.50  "1 "
0
#
#   Case Number 485
1  94401 94413  "1 "    0     # LINE  from  2004G4    34.50 to 2004G4C3  34.50  "1 "
0
#
#   Case Number 486
1  94401 94414  "1 "    0     # LINE  from  2004G4    34.50 to 2004G4C4  34.50  "1 "
0
#
#   Case Number 487
1  94801 94811  "1 "    0     # LINE  from  2004G8    34.50 to 2004G8C1  34.50  "1 "
0
#
#   Case Number 488
1  94801 94812  "1 "    0     # LINE  from  2004G8    34.50 to 2004G8C2  34.50  "1 "
0
```

```
#
#   Case Number 489
1  94801 94813  "1 "    0     # LINE  from  2004G8    34.50 to 2004G8C3  34.50  "1 "
0
#
#   Case Number 490
1  94801 94814  "1 "    0     # LINE  from  2004G8    34.50 to 2004G8C4  34.50  "1 "
0
#
#   Case Number 491
1  95100 95101  "1 "    0     # LINE  from  2005G1   115.00 to 2005G1H  115.00  "1 "
0
#
#   Case Number 492
1  95111 95110  "1 "    0     # LINE  from  2005G1C1  34.50 to 2005G1L   34.50  "1 "
0
#
#   Case Number 493
1  95112 95110  "1 "    0     # LINE  from  2005G1C2  34.50 to 2005G1L   34.50  "1 "
0
#
#   Case Number 494
1  95113 95110  "1 "    0     # LINE  from  2005G1C3  34.50 to 2005G1L   34.50  "1 "
0
#
#   Case Number 495
1  95114 95110  "1 "    0     # LINE  from  2005G1C4  34.50 to 2005G1L   34.50  "1 "
0
#
#   Case Number 496
1  95115 95110  "1 "    0     # LINE  from  2005G1C5  34.50 to 2005G1L   34.50  "1 "
0
#
#   Case Number 497
1  95116 95110  "1 "    0     # LINE  from  2005G1C6  34.50 to 2005G1L   34.50  "1 "
0
#
#   Case Number 498
1  95117 95110  "1 "    0     # LINE  from  2005G1C7  34.50 to 2005G1L   34.50  "1 "
0
#
#   Case Number 499
1  95118 95110  "1 "    0     # LINE  from  2005G1C8  34.50 to 2005G1L   34.50  "1 "
0
#
#   Case Number 500
2  70010 70290  "U1"    0     # TRAN  from  QF MNFRT  13.80 to MONFORT  115.00  "U1"
0
#
#   Case Number 501
2  70034 70037  "U3"    0     # TRAN  from  ARAP3     13.80 to ARAPAHOB 115.00  "U3"
0
#
#   Case Number 502
2  70035 70037  "U4"    0     # TRAN  from  ARAP4     13.80 to ARAPAHOB 115.00  "U4"
0
#
#   Case Number 503
2  70037 70038  "T5"    0     # TRAN  from  ARAPAHOB 115.00 to ARAPAHOE 230.00  "T5"
0
#
#   Case Number 504
2  70095 70096  "1 "    0     # TRAN  from  CF&ISE1   69.00 to CF&ISE1  115.00  "1 "
0
#
#   Case Number 505
2  70097 70096  "T1"    0     # TRAN  from  CF&ISE1-  69.00 to CF&ISE1  115.00  "T1"
0
#
#   Case Number 506
2  70097 70098  "T2"    0     # TRAN  from  CF&ISE1-  69.00 to CF&ISE2  115.00  "T2"
```

```
0
#
#   Case Number 507
2  70103 70108  "U1"    0     # TRAN  from  CHEROK1   15.50 to CHEROKEE 115.00  "U1"
0
#
#   Case Number 508
2  70104 70108  "U2"    0     # TRAN  from  CHEROK2   15.50 to CHEROKEE 115.00  "U2"
0
#
#   Case Number 509
2  70105 70108  "U3"    0     # TRAN  from  CHEROK3   20.00 to CHEROKEE 115.00  "U3"
0
#
#   Case Number 510
2  70106 70108  "U4"    0     # TRAN  from  CHEROK4   22.00 to CHEROKEE 115.00  "U4"
0
#
#   Case Number 511
2  70108 70107  "A1"    0     # TRAN  from  CHEROKEE 115.00 to CHEROKEE 230.00  "A1"
0
#
#   Case Number 512
2  70108 70107  "A2"    0     # TRAN  from  CHEROKEE 115.00 to CHEROKEE 230.00  "A2"
0
#
#   Case Number 513
2  70119 70122  "U1"    0     # TRAN  from  COMAN 1   24.00 to COMANCHE 230.00  "U1"
0
#
#   Case Number 514
2  70120 70122  "U2"    0     # TRAN  from  COMAN 2   24.00 to COMANCHE 230.00  "U2"
0
#
#   Case Number 515
2  70121 70122  "A1"    0     # TRAN  from  COMANCHE 115.00 to COMANCHE 230.00  "A1"
0
#
#   Case Number 516
2  70121 70122  "A2"    0     # TRAN  from  COMANCHE 115.00 to COMANCHE 230.00  "A2"
0
#
#   Case Number 517
2  70122 70654  "1 "    0     # TRAN  from  COMANCHE 230.00 to COMAN 3  345.00  "1 "
0
#
#   Case Number 518
2  70122 70654  "2 "    0     # TRAN  from  COMANCHE 230.00 to COMAN 3  345.00  "2 "
0
#
#   Case Number 519
2  70138 70139  "T1"    0     # TRAN  from  DANIELPK 115.00 to DANIELPK 230.00  "T1"
0
#
#   Case Number 520
2  70139 70601  "1 "    0     # TRAN  from  DANIELPK 230.00 to DANIELPK 345.00  "1 "
0
#
#   Case Number 521
2  70139 70601  "2 "    0     # TRAN  from  DANIELPK 230.00 to DANIELPK 345.00  "2 "
0
#
#   Case Number 522
2  70139 70601  "3 "    0     # TRAN  from  DANIELPK 230.00 to DANIELPK 345.00  "3 "
0
#
#   Case Number 523
2  70148 70149  "T2"    0     # TRAN  from  DENVTM   115.00 to DENVTM   230.00  "T2"
0
#
#   Case Number 524
```

```
2  70150 70148  "T1"    0     # TRAN  from  DENVTM1   13.80 to DENVTM   115.00  "T1"
0
#
#   Case Number 525
2  70152 70148  "T3"    0     # TRAN  from  DENVTM3   13.80 to DENVTM   115.00  "T3"
0
#
#   Case Number 526
2  70188 70191  "T2"    0     # TRAN  from  FTLUP1-2  13.80 to FTLUPTON 115.00  "T2"
0
#
#   Case Number 527
2  70191 70192  "T3"    0     # TRAN  from  FTLUPTON 115.00 to FTLUPTON 230.00  "T3"
0
#
#   Case Number 528
2  70210 70209  "T1"    0     # TRAN  from  GREELEY1  46.00 to GREELEY  115.00  "T1"
0
#
#   Case Number 529
2  70210 70209  "T2"    0     # TRAN  from  GREELEY1  46.00 to GREELEY  115.00  "T2"
0
#
#   Case Number 530
2  70255 70256  "1 "    0     # TRAN  from  LAPORTE   46.00 to LAPORTPS 115.00  "1 "
0
#
#   Case Number 531
2  70259 70260  "T4"    0     # TRAN  from  LEETSDAL 115.00 to LEETSDAL 230.00  "T4"
0
#
#   Case Number 532
2  70265 70266  "T1"    0     # TRAN  from  LOOKOUT  115.00 to LOOKOUT  230.00  "T1"
0
#
#   Case Number 533
2  70265 70266  "T2"    0     # TRAN  from  LOOKOUT  115.00 to LOOKOUT  230.00  "T2"
0
#
#   Case Number 534
2  70285 70286  "T1"    0     # TRAN  from  MIDWAYPS 115.00 to MIDWAYPS 230.00  "T1"
0
#
#   Case Number 535
2  70310 70311  "1A"    0     # TRAN  from  PAWNEE    22.00 to PAWNEE   230.00  "1A"
0
#
#   Case Number 536
2  70310 70311  "1B"    0     # TRAN  from  PAWNEE    22.00 to PAWNEE   230.00  "1B"
0
#
#   Case Number 537
2  70314 70311  "11"    0     # TRAN  from  MANCHEF1  16.00 to PAWNEE   230.00  "11"
0
#
#   Case Number 538
2  70315 70311  "12"    0     # TRAN  from  MANCHEF2  16.00 to PAWNEE   230.00  "12"
0
#
#   Case Number 539
2  70354 70355  "T1"    0     # TRAN  from  RIDGE    115.00 to RIDGE    230.00  "T1"
0
#
#   Case Number 540
2  70354 70355  "T2"    0     # TRAN  from  RIDGE    115.00 to RIDGE    230.00  "T2"
0
#
#   Case Number 541
2  70395 70396  "T1"    0     # TRAN  from  SMOKYHIL 115.00 to SMOKYHIL 230.00  "T1"
0
#
```

```
#   Case Number 542
2  70395 70396  "T2"    0     # TRAN  from  SMOKYHIL 115.00 to SMOKYHIL 230.00  "T2"
0
#
#   Case Number 543
2  70397 70399  "T1"    0     # TRAN  from  B.CK PS  115.00 to B.CK PS  230.00  "T1"
0
#
#   Case Number 544
2  70400 70018  "T2"    0     # TRAN  from  SODALAKE 115.00 to SODALAKE 230.00  "T2"
0
#
#   Case Number 545
2  70406 70410  "U2"    0     # TRAN  from  ST.VR 2   18.00 to ST.VRAIN 230.00  "U2"
0
#
#   Case Number 546
2  70407 70410  "U3"    0     # TRAN  from  ST.VR 3   18.00 to ST.VRAIN 230.00  "U3"
0
#
#   Case Number 547
2  70408 70410  "U4"    0     # TRAN  from  ST.VR 4   18.00 to ST.VRAIN 230.00  "U4"
0
#
#   Case Number 548
2  70409 70410  "U1"    0     # TRAN  from  ST.VRAIN  22.00 to ST.VRAIN 230.00  "U1"
0
#
#   Case Number 549
2  70412 70413  "1 "    0     # TRAN  from  STEM BCH 115.00 to STMBEACH  69.00  "1 "
0
#
#   Case Number 550
2  70426 70427  "T1"    0     # TRAN  from  TARRYALL 115.00 to TARRYALL 230.00  "T1"
0
#
#   Case Number 551
2  70458 70457  "1 "    0     # TRAN  from  WALSENBG 115.00 to WALSENBG  69.00  "1 "
0
#
#   Case Number 552
2  70459 70458  "1 "    0     # TRAN  from  WALSENBG 230.00 to WALSENBG 115.00  "1 "
0
#
#   Case Number 553
2  70463 70464  "T1"    0     # TRAN  from  WATERTON 115.00 to WATERTON 230.00  "T1"
0
#
#   Case Number 554
2  70463 70464  "T2"    0     # TRAN  from  WATERTON 115.00 to WATERTON 230.00  "T2"
0
#
#   Case Number 555
2  70469 70470  "T2"    0     # TRAN  from  WELD      46.00 to WELD  PS 115.00  "T2"
0
#
#   Case Number 556
2  70470 70471  "T1"    0     # TRAN  from  WELD  PS 115.00 to WELD  PS 230.00  "T1"
0
#
#   Case Number 557
2  70478 70148  "T7"    0     # TRAN  from  ZUNI1     13.80 to DENVTM   115.00  "T7"
0
#
#   Case Number 558
2  70487 70192  "T4"    0     # TRAN  from  QF TC-T4  13.80 to FTLUPTON 230.00  "T4"
0
#
#   Case Number 559
2  70490 70192  "T3"    0     # TRAN  from  QF TC-T3  13.80 to FTLUPTON 230.00  "T3"
0
```

```
#
#   Case Number 560
2  70493 70192  "T2"    0     # TRAN  from  QF TI-T2  13.80 to FTLUPTON 230.00  "T2"
0
#
#   Case Number 561
2  70495 70192  "T1"    0     # TRAN  from  QF TI-T1  13.80 to FTLUPTON 230.00  "T1"
0
#
#   Case Number 562
2  70498 70005  "2T"    0     # TRAN  from  QF BCP2T  13.80 to BRUSH SS 115.00  "2T"
0
#
#   Case Number 563
2  70499 70005  "4T"    0     # TRAN  from  QF B4-4T  13.80 to BRUSH SS 115.00  "4T"
0
#
#   Case Number 564
2  70500 70005  "1T"    0     # TRAN  from  QF CPP1T  13.80 to BRUSH SS 115.00  "1T"
0
#
#   Case Number 565
2  70501 70005  "3T"    0     # TRAN  from  QF CPP3T  13.80 to BRUSH SS 115.00  "3T"
0
#
#   Case Number 566
2  70502 70439  "T1"    0     # TRAN  from  QF UNC    13.80 to UNC      115.00  "T1"
0
#
#   Case Number 567
2  70523 70524  "T1"    0     # TRAN  from  SULPHUR  115.00 to SULPHUR  230.00  "T1"
0
#
#   Case Number 568
2  70523 70524  "T2"    0     # TRAN  from  SULPHUR  115.00 to SULPHUR  230.00  "T2"
0
#
#   Case Number 569
2  70538 70539  "1 "    0     # TRAN  from  CHAM48TH 115.00 to CHAM48TH 230.00  "1 "
0
#
#   Case Number 570
2  70546 70545  "T1"    0     # TRAN  from  BRICKCTR 115.00 to BRICKCTR 230.00  "T1"
0
#
#   Case Number 571
2  70553 70036  "56"    0     # TRAN  from  ARAP5-6   13.80 to ARAPAHOA 115.00  "56"
0
#
#   Case Number 572
2  70554 70036  "U7"    0     # TRAN  from  ARAP7     13.80 to ARAPAHOA 115.00  "U7"
0
#
#   Case Number 573
2  70556 70005  "4A"    0     # TRAN  from  QF B4D4T  12.50 to BRUSH SS 115.00  "4A"
0
#
#   Case Number 574
2  70562 70528  "T1"    0     # TRAN  from  SPRUCE1   18.00 to SPRUCE   230.00  "T1"
0
#
#   Case Number 575
2  70563 70528  "T2"    0     # TRAN  from  SPRUCE2   18.00 to SPRUCE   230.00  "T2"
0
#
#   Case Number 576
2  70565 70047  "U1"    0     # TRAN  from  BRTNNUG1  13.80 to BARRLAKE 230.00  "U1"
0
#
#   Case Number 577
2  70566 70047  "U2"    0     # TRAN  from  BRTNNUG2  13.80 to BARRLAKE 230.00  "U2"
```

```
0
#
#   Case Number 578
2  70577 70286  "T1"    0     # TRAN  from  FTNVL1-2  13.80 to MIDWAYPS 230.00  "T1"
0
#
#   Case Number 579
2  70578 70286  "T2"    0     # TRAN  from  FTNVL3-4  13.80 to MIDWAYPS 230.00  "T2"
0
#
#   Case Number 580
2  70579 70286  "T3"    0     # TRAN  from  FTNVL5-6  13.80 to MIDWAYPS 230.00  "T3"
0
#
#   Case Number 581
2  70580 70570  "U1"    0     # TRAN  from  PLNENDD1  13.80 to PLNENDSS 230.00  "U1"
0
#
#   Case Number 582
2  70585 70570  "U3"    0     # TRAN  from  PLNENDG3  13.80 to PLNENDSS 230.00  "U3"
0
#
#   Case Number 583
2  70586 70570  "U4"    0     # TRAN  from  PLNENDG4  13.80 to PLNENDSS 230.00  "U4"
0
#
#   Case Number 584
2  70587 70570  "U2"    0     # TRAN  from  PLNENDD2  13.80 to PLNENDSS 230.00  "U2"
0
#
#   Case Number 585
2  70588 70590  "T1"    0     # TRAN  from  RMEC1     15.00 to RMEC     230.00  "T1"
0
#
#   Case Number 586
2  70589 70590  "T2"    0     # TRAN  from  RMEC2     15.00 to RMEC     230.00  "T2"
0
#
#   Case Number 587
2  70591 70590  "T3"    0     # TRAN  from  RMEC3     23.00 to RMEC     230.00  "T3"
0
#
#   Case Number 588
2  70606 70605  "1 "    0     # TRAN  from  HENRYLAK 115.00 to HENRYLAK 230.00  "1 "
0
#
#   Case Number 589
2  70611 70610  "1 "    0     # TRAN  from  REUNION  115.00 to REUNION  230.00  "1 "
0
#
#   Case Number 590
2  70631 70630  "1 "    0     # TRAN  from  SQRRL01   24.00 to SQUIRLCR 345.00  "1 "
0
#
#   Case Number 591
2  70632 70630  "1 "    0     # TRAN  from  SQRRL02   24.00 to SQUIRLCR 345.00  "1 "
0
#
#   Case Number 592
2  70710 70711  "1 "    0     # TRAN  from  PTZLOGN1  34.50 to PTZLOGN  230.00  "1 "
0
#
#   Case Number 593
2  70712 70711  "1 "    0     # TRAN  from  PTZLOGN2  34.50 to PTZLOGN  230.00  "1 "
0
#
#   Case Number 594
2  70713 70711  "1 "    0     # TRAN  from  PTZLOGN3  34.50 to PTZLOGN  230.00  "1 "
0
#
#   Case Number 595
```

```
2  70723 70722  "1 "    0     # TRAN  from  RDGCREST  34.50 to RDGCREST 115.00  "1 "
0
#
#   Case Number 596
2  70777 70654  "1 "    0     # TRAN  from  COMAN 3   24.00 to COMAN 3  345.00  "1 "
0
#
#   Case Number 597
2  70822 70821  "1 "    0     # TRAN  from  CEDARCK1  34.50 to CEDARCRK 230.00  "1 "
0
#
#   Case Number 598
2  70823 70821  "1 "    0     # TRAN  from  CEDARCK2  34.50 to CEDARCRK 230.00  "1 "
0
#
#   Case Number 599
2  73015 73016  "1 "    0     # TRAN  from  B.CK TRI 115.00 to B.CK TRI 230.00  "1 "
0
#
#   Case Number 600
2  73017 73018  "1 "    0     # TRAN  from  B.SANDY  115.00 to B.SANDY  230.00  "1 "
0
#
#   Case Number 601
2  73035 73036  "1 "    0     # TRAN  from  BURLNGTN 115.00 to BURLNGTN 230.00  "1 "
0
#
#   Case Number 602
2  73035 73036  "2 "    0     # TRAN  from  BURLNGTN 115.00 to BURLNGTN 230.00  "2 "
0
#
#   Case Number 603
2  73035 73302  "1 "    0     # TRAN  from  BURLNGTN 115.00 to BRLNGTN1  13.80  "1 "
0
#
#   Case Number 604
2  73035 73303  "1 "    0     # TRAN  from  BURLNGTN 115.00 to BRLNGTN2  13.80  "1 "
0
#
#   Case Number 605
2  73142 73143  "1 "    0     # TRAN  from  N.YUMA   115.00 to N.YUMA   230.00  "1 "
0
#
#   Case Number 606
2  73165 70350  "1 "    0     # TRAN  from  RAWHIDE  230.00 to RAWHIDE   24.00  "1 "
0
#
#   Case Number 607
2  73165 70351  "1 "    0     # TRAN  from  RAWHIDE  230.00 to RAWHIDEA  13.80  "1 "
0
#
#   Case Number 608
2  73165 70567  "1 "    0     # TRAN  from  RAWHIDE  230.00 to RAWHIDED  13.80  "1 "
0
#
#   Case Number 609
2  73165 70568  "1 "    0     # TRAN  from  RAWHIDE  230.00 to RAWHIDEB  13.80  "1 "
0
#
#   Case Number 610
2  73165 70569  "1 "    0     # TRAN  from  RAWHIDE  230.00 to RAWHIDEC  13.80  "1 "
0
#
#   Case Number 611
2  73192 73193  "1 "    0     # TRAN  from  STORY    230.00 to STORY    345.00  "1 "
0
#
#   Case Number 612
2  73192 73193  "2 "    0     # TRAN  from  STORY    230.00 to STORY    345.00  "2 "
0
#
```

```
#   Case Number 613
2  73224 73223  "1 "    0     # TRAN  from  WRAY     230.00 to WRAY     115.00  "1 "
0
#
#   Case Number 614
2  73531 73532  "1 "    0     # TRAN  from  LINCOLNT 230.00 to LINCOLN1  13.80  "1 "
0
#
#   Case Number 615
2  73531 73533  "1 "    0     # TRAN  from  LINCOLNT 230.00 to LINCOLN2  13.80  "1 "
0
#
#   Case Number 616
2  73900 73901  "1 "    0     # TRAN  from  TI06929A 230.00 to TI06929A  34.50  "1 "
0
#
#   Case Number 617
2  73901 73902  "1 "    0     # TRAN  from  TI06929A  34.50 to TI06929A   0.69  "1 "
0
#
#   Case Number 618
2  73999 73998  "1 "    0     # TRAN  from  TI041103 230.00 to TI041103  34.50  "1 "
0
#
#   Case Number 619
2  94200 94221  "1 "    0     # TRAN  from  2004G2   115.00 to 2004G2G1   0.57  "1 "
0
#
#   Case Number 620
2  94200 94222  "1 "    0     # TRAN  from  2004G2   115.00 to 2004G2G2   0.57  "1 "
0
#
#   Case Number 621
2  94200 94223  "1 "    0     # TRAN  from  2004G2   115.00 to 2004G2G3   0.57  "1 "
0
#
#   Case Number 622
2  94200 94224  "1 "    0     # TRAN  from  2004G2   115.00 to 2004G2G4   0.57  "1 "
0
#
#   Case Number 623
2  94400 94401  "1 "    0     # TRAN  from  2004G4   115.00 to 2004G4    34.50  "1 "
0
#
#   Case Number 624
2  94400 94401  "2 "    0     # TRAN  from  2004G4   115.00 to 2004G4    34.50  "2 "
0
#
#   Case Number 625
2  94411 94421  "1 "    0     # TRAN  from  2004G4C1  34.50 to 2004G4G1   0.57  "1 "
0
#
#   Case Number 626
2  94412 94422  "1 "    0     # TRAN  from  2004G4C2  34.50 to 2004G4G2   0.57  "1 "
0
#
#   Case Number 627
2  94413 94423  "1 "    0     # TRAN  from  2004G4C3  34.50 to 2004G4G3   0.57  "1 "
0
#
#   Case Number 628
2  94414 94424  "1 "    0     # TRAN  from  2004G4C4  34.50 to 2004G4G4   0.57  "1 "
0
#
#   Case Number 629
2  94800 94801  "1 "    0     # TRAN  from  2004G8   115.00 to 2004G8    34.50  "1 "
0
#
#   Case Number 630
2  94811 94821  "1 "    0     # TRAN  from  2004G8C1  34.50 to 2004G8G1   0.57  "1 "
0
```

```
#
#   Case Number 631
2  94812 94822  "1 "    0     # TRAN  from  2004G8C2  34.50 to 2004G8G2   0.57  "1 "
0
#
#   Case Number 632
2  94813 94823  "1 "    0     # TRAN  from  2004G8C3  34.50 to 2004G8G3   0.57  "1 "
0
#
#   Case Number 633
2  94814 94824  "1 "    0     # TRAN  from  2004G8C4  34.50 to 2004G8G4   0.57  "1 "
0
#
#   Case Number 634
2  95101 95110  "2 "    0     # TRAN  from  2005G1H  115.00 to 2005G1L   34.50  "2 "
0
#
#   Case Number 635
2  95111 95121  "1 "    0     # TRAN  from  2005G1C1  34.50 to 2005G1G1   0.57  "1 "
0
#
#   Case Number 636
2  95112 95122  "1 "    0     # TRAN  from  2005G1C2  34.50 to 2005G1G2   0.57  "1 "
0
#
#   Case Number 637
2  95113 95123  "1 "    0     # TRAN  from  2005G1C3  34.50 to 2005G1G3   0.57  "1 "
0
#
#   Case Number 638
2  95114 95124  "1 "    0     # TRAN  from  2005G1C4  34.50 to 2005G1G4   0.57  "1 "
0
#
#   Case Number 639
2  95115 95125  "1 "    0     # TRAN  from  2005G1C5  34.50 to 2005G1G5   0.57  "1 "
0
#
#   Case Number 640
2  95116 95126  "1 "    0     # TRAN  from  2005G1C6  34.50 to 2005G1G6   0.57  "1 "
0
#
#   Case Number 641
2  95117 95127  "1 "    0     # TRAN  from  2005G1C7  34.50 to 2005G1G7   0.57  "1 "
0
#
#   Case Number 642
2  95118 95128  "1 "    0     # TRAN  from  2005G1C8  34.50 to 2005G1G8   0.57  "1 "
0
#
#   Case Number 643
2  99560 99561  "1 "    0     # TRAN  from  05T606T2 115.00 to 2005T6    12.50  "1 "
0
#
#   Case Number 644
2  99560 99621  "1 "    0     # TRAN  from  05T606T2 115.00 to 2006T2    12.50  "1 "
0
#
#   Case Number 645
2  99630 99631  "1 "    0     # TRAN  from  2006T3   115.00 to 2006T3    12.50  "1 "
0
#
#   Case Number 646
3  70010    0  "G1"     0     # GEN  QF MNFRT  13.80   "G1"
0
#
#   Case Number 647
3  70034    0  "G3"     0     # GEN  ARAP3     13.80   "G3"
0
#
#   Case Number 648
3  70035    0  "G4"     0     # GEN  ARAP4     13.80   "G4"
```

```
0
#
#   Case Number 649
3  70103    0  "G1"     0     # GEN  CHEROK1   15.50   "G1"
0
#
#   Case Number 650
3  70104    0  "G2"     0     # GEN  CHEROK2   15.50   "G2"
0
#
#   Case Number 651
3  70105    0  "G3"     0     # GEN  CHEROK3   20.00   "G3"
0
#
#   Case Number 652
3  70106    0  "G4"     0     # GEN  CHEROK4   22.00   "G4"
0
#
#   Case Number 653
3  70119    0  "G1"     0     # GEN  COMAN 1   24.00   "G1"
0
#
#   Case Number 654
3  70120    0  "G2"     0     # GEN  COMAN 2   24.00   "G2"
0
#
#   Case Number 655
3  70188    0  "1 "     0     # GEN  FTLUP1-2  13.80   "1 "
0
#
#   Case Number 656
3  70188    0  "2 "     0     # GEN  FTLUP1-2  13.80   "2 "
0
#
#   Case Number 657
3  70310    0  "G1"     0     # GEN  PAWNEE    22.00   "G1"
0
#
#   Case Number 658
3  70314    0  "G1"     0     # GEN  MANCHEF1  16.00   "G1"
0
#
#   Case Number 659
3  70315    0  "G2"     0     # GEN  MANCHEF2  16.00   "G2"
0
#
#   Case Number 660
3  70350    0  "1 "     0     # GEN  RAWHIDE   24.00   "1 "
0
#
#   Case Number 661
3  70351    0  "1 "     0     # GEN  RAWHIDEA  13.80   "1 "
0
#
#   Case Number 662
3  70406    0  "G2"     0     # GEN  ST.VR 2   18.00   "G2"
0
#
#   Case Number 663
3  70407    0  "G3"     0     # GEN  ST.VR 3   18.00   "G3"
0
#
#   Case Number 664
3  70408    0  "G4"     0     # GEN  ST.VR 4   18.00   "G4"
0
#
#   Case Number 665
3  70409    0  "G1"     0     # GEN  ST.VRAIN  22.00   "G1"
0
#
#   Case Number 666
```

```
3  70478    0  "G1"     0     # GEN  ZUNI1     13.80   "G1"
0
#
#   Case Number 667
3  70479    0  "G2"     0     # GEN  ZUNI2     13.80   "G2"
0
#
#   Case Number 668
3  70487    0  "G4"     0     # GEN  QF TC-T4  13.80   "G4"
0
#
#   Case Number 669
3  70487    0  "G5"     0     # GEN  QF TC-T4  13.80   "G5"
0
#
#   Case Number 670
3  70490    0  "G3"     0     # GEN  QF TC-T3  13.80   "G3"
0
#
#   Case Number 671
3  70490    0  "S2"     0     # GEN  QF TC-T3  13.80   "S2"
0
#
#   Case Number 672
3  70493    0  "S1"     0     # GEN  QF TI-T2  13.80   "S1"
0
#
#   Case Number 673
3  70495    0  "G1"     0     # GEN  QF TI-T1  13.80   "G1"
0
#
#   Case Number 674
3  70495    0  "G2"     0     # GEN  QF TI-T1  13.80   "G2"
0
#
#   Case Number 675
3  70498    0  "G3"     0     # GEN  QF BCP2T  13.80   "G3"
0
#
#   Case Number 676
3  70498    0  "S2"     0     # GEN  QF BCP2T  13.80   "S2"
0
#
#   Case Number 677
3  70499    0  "G4"     0     # GEN  QF B4-4T  13.80   "G4"
0
#
#   Case Number 678
3  70499    0  "G5"     0     # GEN  QF B4-4T  13.80   "G5"
0
#
#   Case Number 679
3  70500    0  "G1"     0     # GEN  QF CPP1T  13.80   "G1"
0
#
#   Case Number 680
3  70500    0  "G2"     0     # GEN  QF CPP1T  13.80   "G2"
0
#
#   Case Number 681
3  70501    0  "S1"     0     # GEN  QF CPP3T  13.80   "S1"
0
#
#   Case Number 682
3  70502    0  "G1"     0     # GEN  QF UNC    13.80   "G1"
0
#
#   Case Number 683
3  70502    0  "G2"     0     # GEN  QF UNC    13.80   "G2"
0
#
```

```
#   Case Number 684
3  70502    0  "G3"     0     # GEN  QF UNC    13.80   "G3"
0
#
#   Case Number 685
3  70553    0  "G5"     0     # GEN  ARAP5-6   13.80   "G5"
0
#
#   Case Number 686
3  70553    0  "G6"     0     # GEN  ARAP5-6   13.80   "G6"
0
#
#   Case Number 687
3  70554    0  "G7"     0     # GEN  ARAP7     13.80   "G7"
0
#
#   Case Number 688
3  70556    0  "S3"     0     # GEN  QF B4D4T  12.50   "S3"
0
#
#   Case Number 689
3  70562    0  "G1"     0     # GEN  SPRUCE1   18.00   "G1"
0
#
#   Case Number 690
3  70563    0  "G2"     0     # GEN  SPRUCE2   18.00   "G2"
0
#
#   Case Number 691
3  70565    0  "G1"     0     # GEN  BRTNNUG1  13.80   "G1"
0
#
#   Case Number 692
3  70566    0  "G2"     0     # GEN  BRTNNUG2  13.80   "G2"
0
#
#   Case Number 693
3  70567    0  "1 "     0     # GEN  RAWHIDED  13.80   "1 "
0
#
#   Case Number 694
3  70568    0  "1 "     0     # GEN  RAWHIDEB  13.80   "1 "
0
#
#   Case Number 695
3  70569    0  "1 "     0     # GEN  RAWHIDEC  13.80   "1 "
0
#
#   Case Number 696
3  70577    0  "G1"     0     # GEN  FTNVL1-2  13.80   "G1"
0
#
#   Case Number 697
3  70577    0  "G2"     0     # GEN  FTNVL1-2  13.80   "G2"
0
#
#   Case Number 698
3  70578    0  "G3"     0     # GEN  FTNVL3-4  13.80   "G3"
0
#
#   Case Number 699
3  70578    0  "G4"     0     # GEN  FTNVL3-4  13.80   "G4"
0
#
#   Case Number 700
3  70579    0  "G5"     0     # GEN  FTNVL5-6  13.80   "G5"
0
#
#   Case Number 701
3  70579    0  "G6"     0     # GEN  FTNVL5-6  13.80   "G6"
0
```

```
#
#   Case Number 702
3  70588    0  "G1"     0     # GEN  RMEC1     15.00   "G1"
0
#
#   Case Number 703
3  70589    0  "G2"     0     # GEN  RMEC2     15.00   "G2"
0
#
#   Case Number 704
3  70591    0  "G3"     0     # GEN  RMEC3     23.00   "G3"
0
#
#   Case Number 705
3  70631    0  "1 "     0     # GEN  SQRRL01   24.00   "1 "
0
#
#   Case Number 706
3  70632    0  "1 "     0     # GEN  SQRRL02   24.00   "1 "
0
#
#   Case Number 707
3  70710    0  "1 "     0     # GEN  PTZLOGN1  34.50   "1 "
0
#
#   Case Number 708
3  70712    0  "1 "     0     # GEN  PTZLOGN2  34.50   "1 "
0
#
#   Case Number 709
3  70713    0  "1 "     0     # GEN  PTZLOGN3  34.50   "1 "
0
#
#   Case Number 710
3  70721    0  "1 "     0     # GEN  SPRNGCAN  34.50   "1 "
0
#
#   Case Number 711
3  70723    0  "1 "     0     # GEN  RDGCREST  34.50   "1 "
0
#
#   Case Number 712
3  70822    0  "1 "     0     # GEN  CEDARCK1  34.50   "1 "
0
#
#   Case Number 713
3  70823    0  "1 "     0     # GEN  CEDARCK2  34.50   "1 "
0
#
#   Case Number 714
3  73302    0  "1 "     0     # GEN  BRLNGTN1  13.80   "1 "
0
#
#   Case Number 715
3  73303    0  "1 "     0     # GEN  BRLNGTN2  13.80   "1 "
0
#
#   Case Number 716
3  73532    0  "1 "     0     # GEN  LINCOLN1  13.80   "1 "
0
#
#   Case Number 717
3  73533    0  "1 "     0     # GEN  LINCOLN2  13.80   "1 "
0
#
#   Case Number 718
3  73902    0  "1 "     0     # GEN  TI06929A   0.69   "1 "
0
#
#   Case Number 719
3  73998    0  "1 "     0     # GEN  TI041103  34.50   "1 "
```

```
0
#
#   Case Number 720
3  94221    0  "W1"     0     # GEN  2004G2G1   0.57   "W1"
0
#
#   Case Number 721
3  94222    0  "W2"     0     # GEN  2004G2G2   0.57   "W2"
0
#
#   Case Number 722
3  94223    0  "W3"     0     # GEN  2004G2G3   0.57   "W3"
0
#
#   Case Number 723
3  94224    0  "W4"     0     # GEN  2004G2G4   0.57   "W4"
0
#
#   Case Number 724
3  94421    0  "W1"     0     # GEN  2004G4G1   0.57   "W1"
0
#
#   Case Number 725
3  94422    0  "W2"     0     # GEN  2004G4G2   0.57   "W2"
0
#
#   Case Number 726
3  94423    0  "W3"     0     # GEN  2004G4G3   0.57   "W3"
0
#
#   Case Number 727
3  94424    0  "W4"     0     # GEN  2004G4G4   0.57   "W4"
0
#
#   Case Number 728
3  94821    0  "W1"     0     # GEN  2004G8G1   0.57   "W1"
0
#
#   Case Number 729
3  94822    0  "W2"     0     # GEN  2004G8G2   0.57   "W2"
0
#
#   Case Number 730
3  94823    0  "W3"     0     # GEN  2004G8G3   0.57   "W3"
0
#
#   Case Number 731
3  94824    0  "W4"     0     # GEN  2004G8G4   0.57   "W4"
0
#
#   Case Number 732
3  95121    0  "W1"     0     # GEN  2005G1G1   0.57   "W1"
0
#
#   Case Number 733
3  95122    0  "W2"     0     # GEN  2005G1G2   0.57   "W2"
0
#
#   Case Number 734
3  95123    0  "W3"     0     # GEN  2005G1G3   0.57   "W3"
0
#
#   Case Number 735
3  95124    0  "W4"     0     # GEN  2005G1G4   0.57   "W4"
0
#
#   Case Number 736
3  95125    0  "W5"     0     # GEN  2005G1G5   0.57   "W5"
0
#
#   Case Number 737
```

```
3  95126    0  "W6"     0     # GEN  2005G1G6   0.57   "W6"
0
#
#   Case Number 738
3  95127    0  "W7"     0     # GEN  2005G1G7   0.57   "W7"
0
#
#   Case Number 739
3  95128    0  "W8"     0     # GEN  2005G1G8   0.57   "W8"
0
#
#   Case Number 740
1  73018 70396  "1 "    0     # LINE  from  B.SANDY  230.00 to SMOKYHIL 230.00  "1 "
0
-1
# EOF
```

Appendix B - Power Flow Results

2009 Heavy Summer Category A Normal Percent Loading		Area	Normal Rating	Units	Case Percent Loading			
Overloaded Element	Contingency Description				pre	pst-caer	pst-psco	pst-tsgt
AKRON 115.00-2004G2 115.00 #1 1	Base Case	73	547	Amps	95	95	95	95
FLAMGORG 138.00-FLAMGORG 69.00 #1 0	Base Case	70	19	MVA	97	97	97	97
LAJUNTAW 115.00-LAJUNTA2 69.00 #1 0	Base Case	70	25	MVA	98	98	99	98
RD_NIXON 230.00-FRTRANGE 230.00 #1 1	Base Case	73	1255	Amps	96	96	96	96

2009 Heavy Summer Category B Emergency Percent Loading		Area	Emergency Rating	Units	Case Percent Loading			
Overloaded Element	Contingency Description				pre	pst-caer	pst-psco	pst-tsgt
2004G4 34.50-2004G4 115.00 #1 0	Open Xfmr 2004G4 115/2004G4 34.5 #2	73	60	MVA	161	161	161	161
2004G4 34.50-2004G4 115.00 #2 0	Open Xfmr 2004G4 115/2004G4 34.5 #1	73	60	MVA	161	161	161	161
2004G8 115.00-WAUNETA 115.00 #1 1	Open Line FLEMING 115-2005G1 115 #1	73	607	Amps	163	163	163	163
2004G8 115.00-WAUNETA 115.00 #1 1	Open Line FLEMING 115-GALIEN 115 #1	73	607	Amps	162	162	162	162
2004G8 115.00-WAUNETA 115.00 #1 1	Open Line STERLING 115-GALIEN 115 #1	73	607	Amps	155	155	155	155
2004G8 115.00-WAUNETA 115.00 #1 1	Open Line N.YUMA 230-STORY 230 #1	73	607	Amps	97			
2004G8 115.00-WAUNETA 115.00 #1 1	Open Line AKRON 115-OTIS LM 115 #1	73	607	Amps	96			
2004G8 115.00-WAUNETA 115.00 #1 1	Open Line PEETZ 115-SIDNEY 115 #1	73	607	Amps	96			
2004G8 115.00-WAUNETA 115.00 #1 1	Open Line DEERINGL 115-OTIS LM 115 #1	73	607	Amps	95			
2004G8 115.00-WAUNETA 115.00 #1 1	Open Line PEETZ 115-STERLING 115 #1	73	607	Amps	95			
2005G1 115.00-FLEMING 115.00 #1 1	Open Line WAUNETA 115-2004G8 115 #1	73	1004	Amps	102	102	102	102
2005G1 115.00-HAXTUN 115.00 #1 1	Open Line FLEMING 115-2005G1 115 #1	73	611	Amps	99	99	99	99
2005G1 115.00-HAXTUN 115.00 #1 1	Open Line FLEMING 115-GALIEN 115 #1	73	611	Amps	97	97	97	97
AKRON 115.00-BEAVERCK 115.00 #1 1	Open Line AKRON 115-OTIS LM 115 #1	73	426	Amps	120	120	120	120
AKRON 115.00-BEAVERCK 115.00 #1 1	Open Line DEERINGL 115-OTIS LM 115 #1	73	426	Amps	110	110	110	110
AKRON 115.00-OTIS LM 115.00 #1 1	Open Line AKRON 115-BEAVERCK 115 #1	73	426	Amps	110	110	110	110
AKRON 115.00-OTIS LM 115.00 #1 1	Open Line N.YUMA 230-STORY 230 #1	73	426	Amps	98			
AKRON 115.00-OTIS LM 115.00 #1 1	Open Line WAUNETA 115-2004G8 115 #1	73	426	Amps	98			
ALVIN 115.00-SANDHILL 115.00 #1 1	Open Line FLEMING 115-2005G1 115 #1	73	477	Amps	103	100	100	100
ALVIN 115.00-SANDHILL 115.00 #1 1	Open Line FLEMING 115-GALIEN 115 #1	73	477	Amps	102	99	99	99
ALVIN 115.00-SANDHILL 115.00 #1 1	Open Line STERLING 115-GALIEN 115 #1	73	477	Amps	97			
ARROWHLK 115.00-WELD PS 115.00 #1 1	Open Line GREELEY 115-WELD PS 115 #1	70	677	Amps	102	102	102	102
B.CK PS 115.00-BRUSH SS 115.00 #1 1	Open Line BRUSH SS 115-B.CK PS 115 #2	70	813	Amps	144	144	144	144
B.CK PS 115.00-BRUSH SS 115.00 #2 1	Open Line BRUSH SS 115-B.CK PS 115 #1	70	939	Amps	125	125	125	125

2009 Heavy Summer Category B Emergency Percent Loading		Area	Emergency Rating	Units	Case Percent Loading			
Overloaded Element	Contingency Description				pre	pst-caer	pst-psco	pst-tsgt
B.CK PS 230.00-B.CK PS 115.00 #T1 0	Open Line B.CK PS 115-BEAVERCK 115 #1	70	224	MVA	101	101	101	101
BONNY CK 115.00-SO. FORK 115.00 #1 1	Open Line B.SANDY 230-BURLNGTN 230 #1	73	733	Amps		102	102	102
BURLNGTN 115.00-BONNY CK 115.00 #1 1	Open Line B.SANDY 230-BURLNGTN 230 #1	73	733	Amps		105	105	105
CHEROK3 20.00-CHEROKEE 115.00 #U3 0	Drop Generator at PAWNEE 22 #G1, 530 MW Dropped	70	225	MVA	272	272	226	271
CHEROK3 20.00-CHEROKEE 115.00 #U3 0	Drop Generator at COMAN 1 24 #G1, 350 MW Dropped	70	225	MVA	205	205	161	205
CHEROK3 20.00-CHEROKEE 115.00 #U3 0	Drop Generator at COMAN 2 24 #G2, 350 MW Dropped	70	225	MVA	205	205	161	205
CHEROK3 20.00-CHEROKEE 115.00 #U3 0	Drop Generator at CHEROK4 22 #G4, 350 MW Dropped	70	225	MVA	204	204	160	204
CHEROK3 20.00-CHEROKEE 115.00 #U3 0	Drop Generator at ST.VRAIN 22 #G1, 342 MW Dropped	70	225	MVA	194	194	149	193
CHEROK3 20.00-CHEROKEE 115.00 #U3 0	Open Xfmr ST.VRAIN 22/ST.VRAIN 230 #U1	70	225	MVA	194	194	149	193
CHEROK3 20.00-CHEROKEE 115.00 #U3 0	Open Xfmr COMAN 2 24/COMANCHE 230 #U2	70	225	MVA	193	192	148	192
CHEROK3 20.00-CHEROKEE 115.00 #U3 0	Open Xfmr COMAN 1 24/COMANCHE 230 #U1	70	225	MVA	192	192	148	191
CHEROK3 20.00-CHEROKEE 115.00 #U3 0	Open Xfmr CHEROK4 22/CHEROKEE 115 #U4	70	225	MVA	189	189	145	189
CHEROK3 20.00-CHEROKEE 115.00 #U3 0	Drop Generator at RMEC3 23 #G3, 300 MW Dropped	70	225	MVA	177	177	133	177
CHEROK3 20.00-CHEROKEE 115.00 #U3 0	Open Xfmr RMEC3 23/RMEC 230 #T3	70	225	MVA	175	175	131	175
CHEROK3 20.00-CHEROKEE 115.00 #U3 0	Drop Generator at RAWHIDE 24 #1 , 290 MW Dropped	70	225	MVA	169	170	125	169
CHEROK3 20.00-CHEROKEE 115.00 #U3 0	Open Xfmr RAWHIDE 230/RAWHIDE 24 #1	70	225	MVA	161	161	117	161
CHEROK3 20.00-CHEROKEE 115.00 #U3 0	Drop Generator at RMEC1 15 #G1, 130 MW Dropped	70	225	MVA	102	102		101
CHEROK3 20.00-CHEROKEE 115.00 #U3 0	Drop Generator at RMEC2 15 #G2, 130 MW Dropped	70	225	MVA	102	102		101
CHEROK3 20.00-CHEROKEE 115.00 #U3 0	Drop Generator at SQRRL01 24 #1 , 125 MW Dropped	70	225	MVA	102	102		101
CHEROK3 20.00-CHEROKEE 115.00 #U3 0	Drop Generator at SQRRL02 24 #1 , 125 MW Dropped	70	225	MVA	102	102		101
CHEROK3 20.00-CHEROKEE 115.00 #U3 0	Open Xfmr SQRRL01 24/SQUIRLCR 345 #1	70	225	MVA	102	102		101
CHEROK3 20.00-CHEROKEE 115.00 #U3 0	Open Xfmr SQRRL02 24/SQUIRLCR 345 #1	70	225	MVA	102	102		101
CHEROK3 20.00-CHEROKEE 115.00 #U3 0	Drop Generator at SPRUCE1 18 #G1, 125 MW Dropped	70	225	MVA	101	101		100
CHEROK3 20.00-CHEROKEE 115.00 #U3 0	Drop Generator at SPRUCE2 18 #G2, 125 MW Dropped	70	225	MVA	101	101		100
CHEROK3 20.00-CHEROKEE 115.00 #U3 0	Drop Generator at ST.VR 2 18 #G2, 130 MW Dropped	70	225	MVA	101	101		101
CHEROK3 20.00-CHEROKEE 115.00 #U3 0	Drop Generator at ST.VR 3 18 #G3, 130 MW Dropped	70	225	MVA	101	101		101
CHEROK3 20.00-CHEROKEE 115.00 #U3 0	Drop Generator at ST.VR 4 18 #G4, 130 MW Dropped	70	225	MVA	101	101		101
CHEROK3 20.00-CHEROKEE 115.00 #U3 0	Open Xfmr RMEC1 15/RMEC 230 #T1	70	225	MVA	101	101		101
CHEROK3 20.00-CHEROKEE 115.00 #U3 0	Open Xfmr RMEC2 15/RMEC 230 #T2	70	225	MVA	101	101		101
CHEROK3 20.00-CHEROKEE 115.00 #U3 0	Open Xfmr ST.VR 2 18/ST.VRAIN 230 #U2	70	225	MVA	101	101		101
CHEROK3 20.00-CHEROKEE 115.00 #U3 0	Open Xfmr ST.VR 3 18/ST.VRAIN 230 #U3	70	225	MVA	101	101		101
CHEROK3 20.00-CHEROKEE 115.00 #U3 0	Open Xfmr ST.VR 4 18/ST.VRAIN 230 #U4	70	225	MVA	101	101		101

2009 Heavy Summer Category B Emergency Percent Loading		Area	Emergency Rating	Units	Case Percent Loading			
Overloaded Element	Contingency Description				pre	pst-caer	pst-psco	pst-tsgt
CHEROK3 20.00-CHEROKEE 115.00 #U3 0	Open Xfmr SPRUCE1 18/SPRUCE 230 #T1	70	225	MVA	100	100		100
CHEROK3 20.00-CHEROKEE 115.00 #U3 0	Open Xfmr SPRUCE2 18/SPRUCE 230 #T2	70	225	MVA	100	100		100
CHEROK3 20.00-CHEROKEE 115.00 #U3 0	Drop Generator at MANCHEF1 16 #G1, 130 MW Dropped	70	225	MVA	99	99		99
CHEROK3 20.00-CHEROKEE 115.00 #U3 0	Drop Generator at MANCHEF2 16 #G2, 130 MW Dropped	70	225	MVA	99	99		99
CHEROK3 20.00-CHEROKEE 115.00 #U3 0	Open Xfmr MANCHEF1 16/PAWNEE 230 #11	70	225	MVA	99	99		98
CHEROK3 20.00-CHEROKEE 115.00 #U3 0	Open Xfmr MANCHEF2 16/PAWNEE 230 #12	70	225	MVA	99	99		98
COMANCHE 230.00-COMANCHE 115.00 #A1 0	Open Xfmr COMANCHE 115/COMANCHE 230 #A2	70	176	MVA	109	109	108	109
COMANCHE 230.00-COMANCHE 115.00 #A1 0	Open Line COMANCHE 230-WALSENBG 230 #1	70	176	MVA		96		
COMANCHE 230.00-COMANCHE 115.00 #A2 0	Open Xfmr COMANCHE 115/COMANCHE 230 #A1	70	185	MVA	104	104	103	104
DANIELPK 230.00-DANIELPK 115.00 #T1 0	Open Line PARKERPS 115-BAYOU 115 #1	70	150	MVA	110	110	110	110
EFMORGTP 115.00-FMWEST 115.00 #1 1	Open Line BEAVERCK 115-ADENA 115 #1	73	607	Amps	104	106	106	107
EFMORGTP 115.00-FMWEST 115.00 #1 1	Open Line HOYT 115-ADENA 115 #1	73	607	Amps	103	105	105	106
FLEMING 115.00-GALIEN 115.00 #1 1	Open Line WAUNETA 115-2004G8 115 #1	73	607	Amps	167	167	167	167
FLEMING 115.00-GALIEN 115.00 #1 1	Open Line HAXTUN 115-2005G1 115 #1	73	607	Amps	98	98	98	98
FMWEST 115.00-BIJOUTAP 115.00 #1 1	Open Line BEAVERCK 115-ADENA 115 #1	73	402	Amps	100	103	103	104
FMWEST 115.00-BIJOUTAP 115.00 #1 1	Open Line HOYT 115-ADENA 115 #1	73	402	Amps	99	102	102	103
FMWEST 115.00-BIJOUTAP 115.00 #1 1	Open Line BEAVERCK 115-BRUSHTAP 115 #1	73	402	Amps	97	98	98	98
GALIEN 115.00-STERLING 115.00 #1 1	Open Line WAUNETA 115-2004G8 115 #1	73	607	Amps	159	159	159	159
HPCYN 115.00-DANIELPK 115.00 #1 1	Open Line PARKERPS 115-BAYOU 115 #1	70	677	Amps	95	96	95	96
LITTLET1 115.00-ENGLE3TP 115.00 #1 1	Open Line WATERTON 115-MARTN1TP 115 #1	70	677	Amps	101	101	101	101
LITTLET2 115.00-MARTN1TP 115.00 #1 1	Open Line ARAPAHOB 115-ENGLE3TP 115 #1	70	678	Amps	120	120	120	120
LOOKOUT 230.00-PLNENDSS 230.00 #1 1	Open Line LOOKOUT 230-PLNENDSS 230 #2	70	843	Amps	116	115	117	116
LOOKOUT 230.00-PLNENDSS 230.00 #2 1	Open Line LOOKOUT 230-PLNENDSS 230 #1	70	843	Amps	116	115	117	116
MARTN1TP 115.00-WATERTON 115.00 #1 1	Open Line ARAPAHOB 115-ENGLE3TP 115 #1	70	678	Amps	132	132	132	132
MARTN1TP 115.00-WATERTON 115.00 #1 1	Open Line ENGLE3TP 115-LITTLET1 115 #1	70	678	Amps	96	96	95	96
OTIS LM 115.00-DEERINGL 115.00 #1 1	Open Line AKRON 115-BEAVERCK 115 #1	73	426	Amps	101	101	101	101
PAWNEE 22.00-PAWNEE 230.00 #1A 0	Open Xfmr PAWNEE 22/PAWNEE 230 #1B	70	364	MVA	137	137	137	137
PAWNEE 22.00-PAWNEE 230.00 #1B 0	Open Xfmr PAWNEE 22/PAWNEE 230 #1A	70	364	MVA	137	137	137	137
PAWNEE 230.00-BRICKCTR 230.00 #1 1	Open Line DANIELPK 230-PAWNEE 230 #1	70	1200	Amps	96	96	97	96
PAWNEE 230.00-DANIELPK 230.00 #1 1	Open Line PAWNEE 230-BRICKCTR 230 #1	70	853	Amps	121	122	123	122
PAWNEE 230.00-DANIELPK 230.00 #1 1	Open Line FTLUPTON 230-PAWNEE 230 #1	70	853	Amps	111	112	113	112
PAWNEE 230.00-DANIELPK 230.00 #1 1	Open Line QUINCY 230-BRICKCTR 230 #1	70	853	Amps	110	110	111	110

2009 Heavy Summer Category B Emergency Percent Loading		Area	Emergency Rating	Units	Case Percent Loading			
Overloaded Element	Contingency Description				pre	pst-caer	pst-psco	pst-tsgt
PAWNEE 230.00-DANIELPK 230.00 #1 1	Open Line QUINCY 230-SMOKYHIL 230 #1	70	853	Amps	109	109	111	110
PAWNEE 230.00-DANIELPK 230.00 #1 1	Open Xfmr B.SANDY 115/B.SANDY 230 #1	70	853	Amps	97	97	98	98
PAWNEE 230.00-DANIELPK 230.00 #1 1	Open Line B.SANDY 230-BURLNGTN 230 #1	70	853	Amps		97	98	98
PAWNEE 230.00-DANIELPK 230.00 #1 1	Open Line FTLUPTON 230-JLGREEN 230 #1	70	853	Amps	96	96	97	96
PAWNEE 230.00-DANIELPK 230.00 #1 1	Open Line B.SANDY 230-SMOKYHIL 230 #1	70	853	Amps	95	96	97	96
PAWNEE 230.00-DANIELPK 230.00 #1 1	Open Line WASHINGT 230-JLGREEN 230 #1	70	853	Amps	95	96	97	96
PAWNEE 230.00-FTLUPTON 230.00 #1 1	Open Line PAWNEE 230-BRICKCTR 230 #1	70	891	Amps	106	107	109	108
PAWNEE 230.00-FTLUPTON 230.00 #1 1	Open Line DANIELPK 230-PAWNEE 230 #1	70	891	Amps	100	101	103	102
PAWNEE 230.00-FTLUPTON 230.00 #1 1	Open Line QUINCY 230-BRICKCTR 230 #1	70	891	Amps			95	
PEAKVIEW 115.00-SMOKYHIL 115.00 #1 1	Open Line SMOKYHIL 230-MURPHY 230 #1	70	937	Amps	98	98	97	98
PEAKVIEW 115.00-SMOKYHIL 115.00 #1 1	Open Line MURPHY 230-HOMESTEA 230 #1	70	937	Amps	97	98	97	98
PEAKVIEW 115.00-SMOKYHIL 115.00 #1 1	Open Line SULPHUR 230-HOMESTEA 230 #1	70	937	Amps	95	96	95	96
RIDGE 230.00-RIDGE 115.00 #T1 0	Open Xfmr RIDGE 115/RIDGE 230 #T2	70	112	MVA	110	110	109	110
RIDGE 230.00-RIDGE 115.00 #T2 0	Open Xfmr RIDGE 115/RIDGE 230 #T1	70	100	MVA	125	124	124	124
RIDGE 230.00-RIDGE 115.00 #T2 0	Open Line ARVADA 115-CHEROKEE 115 #1	70	100	MVA	99	99	101	99
SILVSADL 230.00-REUNION 230.00 #1 1	Open Line FTLUPTON 230-JLGREEN 230 #1	70	818	Amps	100	100	103	101
SILVSADL 230.00-REUNION 230.00 #1 1	Open Line WASHINGT 230-JLGREEN 230 #1	70	818	Amps	99	100	102	100
SILVSADL 230.00-REUNION 230.00 #1 1	Open Line FTLUPTON 230-HENRYLAK 230 #1	70	818	Amps			96	
SILVSADL 230.00-REUNION 230.00 #1 1	Open Line GLENN PS 230-WASHINGT 230 #1	70	818	Amps			97	95
SILVSADL 230.00-REUNION 230.00 #1 1	Open Line RIVERDAL 230-HENRYLAK 230 #1	70	818	Amps			95	
VALMONT 230.00-VALMONT 115.00 #T7 0	Open Line SIMMS 230-PLNENDSS 230 #1	70	280	MVA	96		97	
WATERTON 115.00-MARTN1TP 115.00 #1 1	Open Line ARAPAHOB 115-ENGLE3TP 115 #1	70	678	Amps	132	132	132	132
WATERTON 115.00-MARTN1TP 115.00 #1 1	Open Line ENGLE3TP 115-LITTLET1 115 #1	70	678	Amps	96	96	95	96
WATERTON 230.00-WATERTON 115.00 #T1 0	Open Line ARAPAHOB 115-ENGLE3TP 115 #1	70	100	MVA	99	99	97	99
WATERTON 230.00-WATERTON 115.00 #T1 0	Open Xfmr WATERTON 115/WATERTON 230 #T2	70	100	MVA	95	95	96	95
WATERTON 230.00-WATERTON 115.00 #T2 0	Open Line ARAPAHOB 115-ENGLE3TP 115 #1	70	100	MVA	100	100	99	101
WATERTON 230.00-WATERTON 115.00 #T2 0	Open Xfmr WATERTON 115/WATERTON 230 #T1	70	100	MVA	96	96	97	96
WAUNETA 115.00-ALVIN 115.00 #1 1	Open Line FLEMING 115-2005G1 115 #1	73	336	Amps	160	156	156	156
WAUNETA 115.00-ALVIN 115.00 #1 1	Open Line FLEMING 115-GALIEN 115 #1	73	336	Amps	159	155	155	155
WAUNETA 115.00-ALVIN 115.00 #1 1	Open Line STERLING 115-GALIEN 115 #1	73	336	Amps	152	148	148	148
WAUNETA 115.00-ALVIN 115.00 #1 1	Open Line WAGES 115-WAUNETA 115 #1	73	336	Amps	129	124	125	124
WAUNETA 115.00-ALVIN 115.00 #1 1	Open Line REDWILLW 115-WAGES 115 #1	73	336	Amps	115	111	111	111

2009 Heavy Summer Category B Emergency Percent Loading		Area	Emergency Rating	Units	Case Percent Loading			
Overloaded Element	Contingency Description				pre	pst-caer	pst-psco	pst-tsgt
WAUNETA 115.00-ALVIN 115.00 #1 1	Open Line N.YUMA 115-REDWILLW 115 #1	73	336	Amps	110	105	105	105
WAUNETA 115.00-ALVIN 115.00 #1 1	Open Line DEERINGL 115-05T606T2 115 #1	73	336	Amps	106	99	99	99
WAUNETA 115.00-ALVIN 115.00 #1 1	Open Line N.YUMA 230-WRAY 230 #1	73	336	Amps	101			
WAUNETA 115.00-ALVIN 115.00 #1 1	Open Xfmr WRAY 230/WRAY 115 #1	73	336	Amps	101			
WAUNETA 115.00-ALVIN 115.00 #1 1	Open Line ECKLEY 115-05T606T2 115 #1	73	336	Amps	98			
WAUNETA 115.00-WAGES 115.00 #1 1	Open Line FLEMING 115-2005G1 115 #1	73	336	Amps	118	121	121	121
WAUNETA 115.00-WAGES 115.00 #1 1	Open Line FLEMING 115-GALIEN 115 #1	73	336	Amps	117	120	120	120
WAUNETA 115.00-WAGES 115.00 #1 1	Open Line ALVIN 115-WAUNETA 115 #1	73	336	Amps	116	114	114	114
WAUNETA 115.00-WAGES 115.00 #1 1	Open Line STERLING 115-GALIEN 115 #1	73	336	Amps	110	114	114	114
WAUNETA 115.00-WAGES 115.00 #1 1	Open Line ALVIN 115-SANDHILL 115 #1	73	336	Amps	105	103	103	103

2009 Light Winter - Category B Emergency Percent Loading		Area	Emergency Rating	Unit	Case Percent Loading			
Overloaded Element	Contingency Description				pre	pst-caer	pst-psco	pst-tsgt
2004G4 34.50-2004G4 115.00 #1 0	Open Xfmr 2004G4 115/2004G4 34.5 #2	73	60	MVA	161	161	161	161
2004G4 34.50-2004G4 115.00 #2 0	Open Xfmr 2004G4 115/2004G4 34.5 #1	73	60	MVA	161	161	161	161
2004G8 115.00-WAUNETA 115.00 #1 1	Open Line FLEMING 115-2005G1 115 #1	73	607	Amps	178	178	178	178
2004G8 115.00-WAUNETA 115.00 #1 1	Open Line FLEMING 115-GALIEN 115 #1	73	607	Amps	178	178	178	178
2004G8 115.00-WAUNETA 115.00 #1 1	Open Line STERLING 115-GALIEN 115 #1	73	607	Amps	177	177	177	177
2004G8 115.00-WAUNETA 115.00 #1 1	Open Line MESSEX 115-STERLING 115 #1	73	607	Amps	109	106	107	107
2004G8 115.00-WAUNETA 115.00 #1 1	Open Line BEAVERCK 115-MESSEX 115 #1	73	607	Amps	108	106	107	106
2004G8 115.00-WAUNETA 115.00 #1 1	Open Line PEETZ 115-SIDNEY 115 #1	73	607	Amps	107	106	105	106
2004G8 115.00-WAUNETA 115.00 #1 1	Open Line PEETZ 115-STERLING 115 #1	73	607	Amps	107	106	106	106
2004G8 115.00-WAUNETA 115.00 #1 1	Open Line AKRON 115-2004G2 115 #1	73	607	Amps	98	95	95	95
2005G1 115.00-HAXTUN 115.00 #1 1	Open Line FLEMING 115-2005G1 115 #1	73	611	Amps	98	98	98	98
2005G1 115.00-HAXTUN 115.00 #1 1	Open Line FLEMING 115-GALIEN 115 #1	73	611	Amps	98	98	98	98
2005G1 115.00-HAXTUN 115.00 #1 1	Open Line STERLING 115-GALIEN 115 #1	73	611	Amps	97	97	97	97
AKRON 115.00-BEAVERCK 115.00 #1 1	Open Line AKRON 115-OTIS LM 115 #1	73	426	Amps	116	116	116	116
AKRON 115.00-BEAVERCK 115.00 #1 1	Open Line DEERINGL 115-OTIS LM 115 #1	73	426	Amps	115	115	115	115
AKRON 115.00-BEAVERCK 115.00 #1 1	Open Line B.SANDY 230-BURLNGTN 230 #1	73	426	Amps	104	114	114	114
AKRON 115.00-BEAVERCK 115.00 #1 1	Open Xfmr N.YUMA 115/N.YUMA 230 #1	73	426	Amps	102	107	107	107
AKRON 115.00-BEAVERCK 115.00 #1 1	Open Line FLEMING 115-2005G1 115 #1	73	426	Amps	101	105	105	105
AKRON 115.00-BEAVERCK 115.00 #1 1	Open Line FLEMING 115-GALIEN 115 #1	73	426	Amps	101	105	105	105
AKRON 115.00-BEAVERCK 115.00 #1 1	Open Line STERLING 115-GALIEN 115 #1	73	426	Amps	101	104	105	105
AKRON 115.00-BEAVERCK 115.00 #1 1	Open Line N.YUMA 230-STORY 230 #1	73	426	Amps	98	104	105	104
AKRON 115.00-BEAVERCK 115.00 #1 1	Open Line BEAVERCK 115-MESSEX 115 #1	73	426	Amps		97	97	97
AKRON 115.00-BEAVERCK 115.00 #1 1	Open Line MESSEX 115-STERLING 115 #1	73	426	Amps		97	97	97
AKRON 115.00-BEAVERCK 115.00 #1 1	Open Line N.YUMA 230-SPRNGCAN 230 #1	73	426	Amps		95	95	95
AKRON 115.00-OTIS LM 115.00 #1 1	Open Line AKRON 115-BEAVERCK 115 #1	73	426	Amps	113	113	113	113
ALVIN 115.00-SANDHILL 115.00 #1 1	Open Line FLEMING 115-2005G1 115 #1	73	477	Amps	120	118	118	118
ALVIN 115.00-SANDHILL 115.00 #1 1	Open Line FLEMING 115-GALIEN 115 #1	73	477	Amps	120	117	118	117
ALVIN 115.00-SANDHILL 115.00 #1 1	Open Line STERLING 115-GALIEN 115 #1	73	477	Amps	120	117	117	117
ALVIN 115.00-SANDHILL 115.00 #1 1	Open Line WAGES 115-WAUNETA 115 #1	73	477	Amps	101	98	98	98
ALVIN 115.00-SANDHILL 115.00 #1 1	Open Line REDWILLW 115-WAGES 115 #1	73	477	Amps	100	97	97	97

2009 Light Winter - Category B Emergency Percent Loading		Area	Emergency Rating	Unit	Case Percent Loading			
Overloaded Element	Contingency Description				pre	pst-caer	pst-psco	pst-tsgt
ALVIN 115.00-SANDHILL 115.00 #1 1	Open Line N.YUMA 115-REDWILLW 115 #1	73	477	Amps	99	96	96	96
BONNY CK 115.00-BURLNGTN 115.00 #1 1	Open Line B.SANDY 230-BURLNGTN 230 #1	73	733	Amps		144	145	145
BONNY CK 115.00-SO. FORK 115.00 #1 1	Open Line B.SANDY 230-BURLNGTN 230 #1	73	733	Amps		144	144	144
BURLNGTN 230.00-BURLNGTN 115.00 #1 0	Open Xfmr BURLNGTN 115/BURLNGTN 230 #2	73	100	MVA	115			
CHEROK3 20.00-CHEROKEE 115.00 #U3 0	Drop Generator at PAWNEE 22 #G1, 530 MW Dropped	70	225	MVA	290	290	244	290
CHEROK3 20.00-CHEROKEE 115.00 #U3 0	Drop Generator at COMAN 1 24 #G1, 325 MW Dropped	70	225	MVA	204	204	159	204
CHEROK3 20.00-CHEROKEE 115.00 #U3 0	Drop Generator at COMAN 2 24 #G2, 325 MW Dropped	70	225	MVA	204	204	159	204
CHEROK3 20.00-CHEROKEE 115.00 #U3 0	Open Xfmr COMAN 2 24/COMANCHE 230 #U2	70	225	MVA	196	196	151	196
CHEROK3 20.00-CHEROKEE 115.00 #U3 0	Open Xfmr COMAN 1 24/COMANCHE 230 #U1	70	225	MVA	196	196	151	195
CHEROK3 20.00-CHEROKEE 115.00 #U3 0	Drop Generator at CHEROK4 22 #G4, 300 MW Dropped	70	225	MVA	193	194	149	193
CHEROK3 20.00-CHEROKEE 115.00 #U3 0	Drop Generator at ST.VRAIN 22 #G1, 300 MW Dropped	70	225	MVA	189	190	145	190
CHEROK3 20.00-CHEROKEE 115.00 #U3 0	Open Xfmr ST.VRAIN 22/ST.VRAIN 230 #U1	70	225	MVA	189	190	145	189
CHEROK3 20.00-CHEROKEE 115.00 #U3 0	Drop Generator at RAWHIDE 24 #1 , 290 MW Dropped	70	225	MVA	184	184	139	184
CHEROK3 20.00-CHEROKEE 115.00 #U3 0	Open Xfmr CHEROK4 22/CHEROKEE 115 #U4	70	225	MVA	184	184	140	184
CHEROK3 20.00-CHEROKEE 115.00 #U3 0	Open Xfmr RAWHIDE 230/RAWHIDE 24 #1	70	225	MVA	178	179	134	178
CHEROK3 20.00-CHEROKEE 115.00 #U3 0	Drop Generator at RMEC3 23 #G3, 220 MW Dropped	70	225	MVA	155	155	110	154
CHEROK3 20.00-CHEROKEE 115.00 #U3 0	Open Xfmr RMEC3 23/RMEC 230 #T3	70	225	MVA	153	154	109	153
CHEROK3 20.00-CHEROKEE 115.00 #U3 0	Drop Generator at RMEC2 15 #G2, 140 MW Dropped	70	225	MVA	119	119		119
CHEROK3 20.00-CHEROKEE 115.00 #U3 0	Open Xfmr RMEC2 15/RMEC 230 #T2	70	225	MVA	118	118		118
CHEROK3 20.00-CHEROKEE 115.00 #U3 0	Drop Generator at ARAP4 13.8 #G4, 115 MW Dropped	70	225	MVA	109	109		109
CHEROK3 20.00-CHEROKEE 115.00 #U3 0	Drop Generator at CHEROK1 15.5 #G1, 110 MW Dropped	70	225	MVA	106	106		106
CHEROK3 20.00-CHEROKEE 115.00 #U3 0	Drop Generator at CHEROK2 15.5 #G2, 110 MW Dropped	70	225	MVA	106	106		106
CHEROK3 20.00-CHEROKEE 115.00 #U3 0	Open Xfmr ARAP4 13.8/ARAPAHOB 115 #U4	70	225	MVA	106	107		106
CHEROK3 20.00-CHEROKEE 115.00 #U3 0	Open Xfmr CHEROK1 15.5/CHEROKEE 115 #U1	70	225	MVA	104	104		104
CHEROK3 20.00-CHEROKEE 115.00 #U3 0	Open Xfmr CHEROK2 15.5/CHEROKEE 115 #U2	70	225	MVA	104	104		104
FLEMING 115.00-GALIEN 115.00 #1 1	Open Line ALVIN 115-WAUNETA 115 #1	73	607	Amps	103	104	104	104
FLEMING 115.00-GALIEN 115.00 #1 1	Open Line ALVIN 115-SANDHILL 115 #1	73	607	Amps	102	104	103	103
FLEMING 115.00-GALIEN 115.00 #1 1	Open Line SANDHILL 115-WRAY 115 #1	73	607	Amps	102	103	103	103
FLEMING 115.00-GALIEN 115.00 #1 1	Open Line B.SANDY 230-BURLNGTN 230 #1	73	607	Amps	95	103	103	103
FLEMING 115.00-GALIEN 115.00 #1 1	Open Line WAGES 115-WAUNETA 115 #1	73	607	Amps	98	101	100	101
FLEMING 115.00-GALIEN 115.00 #1 1	Open Line REDWILLW 115-WAGES 115 #1	73	607	Amps	98	100	100	100
FLEMING 115.00-GALIEN 115.00 #1 1	Open Line N.YUMA 115-REDWILLW 115 #1	73	607	Amps	97	100	100	100

2009 Light Winter - Category B Emergency Percent Loading		Area	Emergency Rating	Unit	Case Percent Loading			
Overloaded Element	Contingency Description				pre	pst-caer	pst-psco	pst-tsgt
FLEMING 115.00-GALIEN 115.00 #1 1	Open Line FRENCHCK 115-HAXTUN 115 #1	73	607	Amps	98	98	98	98
FLEMING 115.00-GALIEN 115.00 #1 1	Open Line HAXTUN 115-2005G1 115 #1	73	607	Amps	98	98	98	98
FLEMING 115.00-GALIEN 115.00 #1 1	Open Line FRENCHCK 115-2004G8 115 #1	73	607	Amps	96	96	96	96
FRENCHCK 115.00-2004G8 115.00 #1 1	Open Line FLEMING 115-2005G1 115 #1	73	607	Amps	97	97	97	97
FRENCHCK 115.00-2004G8 115.00 #1 1	Open Line FLEMING 115-GALIEN 115 #1	73	607	Amps	97	97	97	97
FRENCHCK 115.00-2004G8 115.00 #1 1	Open Line STERLING 115-GALIEN 115 #1	73	607	Amps	96	96	96	96
GALIEN 115.00-STERLING 115.00 #1 1	Open Line ALVIN 115-WAUNETA 115 #1	73	607	Amps	102	103	103	103
GALIEN 115.00-STERLING 115.00 #1 1	Open Line ALVIN 115-SANDHILL 115 #1	73	607	Amps	101	103	102	102
GALIEN 115.00-STERLING 115.00 #1 1	Open Line SANDHILL 115-WRAY 115 #1	73	607	Amps	101	102	102	102
GALIEN 115.00-STERLING 115.00 #1 1	Open Line B.SANDY 230-BURLNGTN 230 #1	73	607	Amps		102	102	102
GALIEN 115.00-STERLING 115.00 #1 1	Open Line WAGES 115-WAUNETA 115 #1	73	607	Amps	97	100	100	100
GALIEN 115.00-STERLING 115.00 #1 1	Open Line REDWILLW 115-WAGES 115 #1	73	607	Amps	97	99	99	99
GALIEN 115.00-STERLING 115.00 #1 1	Open Line N.YUMA 115-REDWILLW 115 #1	73	607	Amps	96	99	99	99
GALIEN 115.00-STERLING 115.00 #1 1	Open Line FRENCHCK 115-HAXTUN 115 #1	73	607	Amps	97	97	97	97
GALIEN 115.00-STERLING 115.00 #1 1	Open Line HAXTUN 115-2005G1 115 #1	73	607	Amps	97	97	97	97
GALIEN 115.00-STERLING 115.00 #1 1	Open Line FRENCHCK 115-2004G8 115 #1	73	607	Amps	95	95	95	95
HAXTUN 115.00-FRENCHCK 115.00 #1 1	Open Line FLEMING 115-2005G1 115 #1	73	611	Amps	98	98	98	98
HAXTUN 115.00-FRENCHCK 115.00 #1 1	Open Line FLEMING 115-GALIEN 115 #1	73	611	Amps	97	97	97	97
HAXTUN 115.00-FRENCHCK 115.00 #1 1	Open Line STERLING 115-GALIEN 115 #1	73	611	Amps	96	96	96	96
IDALIA 115.00-VERNONTP 115.00 #1 1	Open Line B.SANDY 230-BURLNGTN 230 #1	73	733	Amps		140	140	140
LINCOLNT 230.00-B.SANDY 230.00 #1 1	Open Line B.SANDY 230-SMOKYHIL 230 #1	73	843	Amps		101	101	101
OTIS LM 115.00-DEERINGL 115.00 #1 1	Open Line AKRON 115-BEAVERCK 115 #1	73	426	Amps	112	111	111	111
PAWNEE 22.00-PAWNEE 230.00 #1A 0	Open Xfmr PAWNEE 22/PAWNEE 230 #1B	70	364	MVA	141	141	142	141
PAWNEE 22.00-PAWNEE 230.00 #1B 0	Open Xfmr PAWNEE 22/PAWNEE 230 #1A	70	364	MVA	141	141	142	141
SANDHILL 115.00-WRAY 115.00 #1 1	Open Line FLEMING 115-2005G1 115 #1	73	477	Amps	119	116	116	116
SANDHILL 115.00-WRAY 115.00 #1 1	Open Line FLEMING 115-GALIEN 115 #1	73	477	Amps	119	116	116	116
SANDHILL 115.00-WRAY 115.00 #1 1	Open Line STERLING 115-GALIEN 115 #1	73	477	Amps	118	115	115	115
SANDHILL 115.00-WRAY 115.00 #1 1	Open Line WAGES 115-WAUNETA 115 #1	73	477	Amps	100	96	96	96
SANDHILL 115.00-WRAY 115.00 #1 1	Open Line N.YUMA 115-REDWILLW 115 #1	73	477	Amps	98			
SANDHILL 115.00-WRAY 115.00 #1 1	Open Line REDWILLW 115-WAGES 115 #1	73	477	Amps	98		95	
SO. FORK 115.00-IDALIA 115.00 #1 1	Open Line B.SANDY 230-BURLNGTN 230 #1	73	733	Amps		141	141	141
VERNONTP 115.00-WRAY 115.00 #1 1	Open Line B.SANDY 230-BURLNGTN 230 #1	73	733	Amps		140	140	140

2009 Light Winter - Category B Emergency Percent Loading		Area	Emergency Rating	Unit	Case Percent Loading			
Overloaded Element	Contingency Description				pre	pst-caer	pst-psco	pst-tsgt
WAUNETA 115.00-ALVIN 115.00 #1 1	Open Line FLEMING 115-2005G1 115 #1	73	336	Amps	173	169	169	169
WAUNETA 115.00-ALVIN 115.00 #1 1	Open Line FLEMING 115-GALIEN 115 #1	73	336	Amps	173	169	169	169
WAUNETA 115.00-ALVIN 115.00 #1 1	Open Line STERLING 115-GALIEN 115 #1	73	336	Amps	172	168	168	168
WAUNETA 115.00-ALVIN 115.00 #1 1	Open Line WAGES 115-WAUNETA 115 #1	73	336	Amps	146	141	141	141
WAUNETA 115.00-ALVIN 115.00 #1 1	Open Line REDWILLW 115-WAGES 115 #1	73	336	Amps	144	139	140	139
WAUNETA 115.00-ALVIN 115.00 #1 1	Open Line N.YUMA 115-REDWILLW 115 #1	73	336	Amps	143	138	139	138
WAUNETA 115.00-ALVIN 115.00 #1 1	Open Line BEAVERCK 115-MESSEX 115 #1	73	336	Amps	107	101	101	101
WAUNETA 115.00-ALVIN 115.00 #1 1	Open Line MESSEX 115-STERLING 115 #1	73	336	Amps	107	101	102	101
WAUNETA 115.00-ALVIN 115.00 #1 1	Open Line PEETZ 115-SIDNEY 115 #1	73	336	Amps	106	100	100	100
WAUNETA 115.00-ALVIN 115.00 #1 1	Open Line PEETZ 115-STERLING 115 #1	73	336	Amps	106	100	100	100
WAUNETA 115.00-ALVIN 115.00 #1 1	Open Xfmr N.YUMA 115/N.YUMA 230 #1	73	336	Amps	105	100	101	100
WAUNETA 115.00-ALVIN 115.00 #1 1	Open Line DEERINGL 115-05T606T2 115 #1	73	336	Amps	102			
WAUNETA 115.00-ALVIN 115.00 #1 1	Drop Generator at BRLNGTN1 13.8 #1 , 60 MW Dropped	73	336	Amps	99			
WAUNETA 115.00-ALVIN 115.00 #1 1	Drop Generator at BRLNGTN2 13.8 #1 , 60 MW Dropped	73	336	Amps	99			
WAUNETA 115.00-ALVIN 115.00 #1 1	Open Xfmr BURLNGTN 115/BRLNGTN1 13.8 #1	73	336	Amps	99			
WAUNETA 115.00-ALVIN 115.00 #1 1	Open Xfmr BURLNGTN 115/BRLNGTN2 13.8 #1	73	336	Amps	99			
WAUNETA 115.00-ALVIN 115.00 #1 1	Open Xfmr B.SANDY 115/B.SANDY 230 #1	73	336	Amps	98			
WAUNETA 115.00-WAGES 115.00 #1 1	Open Line FLEMING 115-2005G1 115 #1	73	336	Amps	147	151	151	151
WAUNETA 115.00-WAGES 115.00 #1 1	Open Line FLEMING 115-GALIEN 115 #1	73	336	Amps	146	151	151	151
WAUNETA 115.00-WAGES 115.00 #1 1	Open Line STERLING 115-GALIEN 115 #1	73	336	Amps	146	150	150	150
WAUNETA 115.00-WAGES 115.00 #1 1	Open Line ALVIN 115-WAUNETA 115 #1	73	336	Amps	138	136	136	136
WAUNETA 115.00-WAGES 115.00 #1 1	Open Line ALVIN 115-SANDHILL 115 #1	73	336	Amps	136	134	134	134
WAUNETA 115.00-WAGES 115.00 #1 1	Open Line SANDHILL 115-WRAY 115 #1	73	336	Amps	135	133	133	133

For 2009 Light Winter, Burlington - Big Sandy 230 kV line outage solved manually due to divergence in power flow analysis (Wray reactors/capacitors required manual switcing)

2009 Heavy Summer

No Category A Normal Voltage Violations

2009 Heavy Summer - Category B Voltage Violations			Area	Case Per Unit Voltage			
Bus Name	Base Voltage	Contingency Description		pre	pst-caer	pst-psco	pst-tsgt
2006T3	115	Open Line BEAVERCK 115-BRUSHTAP 115 #1	73	0.85	0.85	0.85	0.85
2006T3	115	Open Line BRUSHTAP 115-EFMORGTP 115 #1	73	0.87	0.87	0.87	0.87
2006T3	115	Open Line EFMORGTP 115-FMWEST 115 #1	73	0.89	0.89	0.88	0.88
2006T3	12.5	Open Line BEAVERCK 115-BRUSHTAP 115 #1	73	0.85	0.85	0.85	0.85
2006T3	12.5	Open Line BRUSHTAP 115-EFMORGTP 115 #1	73	0.87	0.87	0.87	0.87
2006T3	12.5	Open Line EFMORGTP 115-FMWEST 115 #1	73	0.89	0.89	0.88	0.88
ARAP5-6	13.8	Open Xfmr ARAP5-6 13.8/ARAPAHOA 115 #56	70	1.03	1.03	1.03	1.03
BARLOW	115	Open Line BEAVERCK 115-BRUSHTAP 115 #1	73	0.85	0.85	0.85	0.85
BARLOW	115	Open Line BRUSHTAP 115-EFMORGTP 115 #1	73	0.87	0.87	0.87	0.87
BETHELLM	115	Open Line WRAY 115-WRAY TAP 115 #1	73	0.94	0.94	0.94	0.94
BIJOUTAP	115	Open Line BEAVERCK 115-BRUSHTAP 115 #1	73	0.87	0.87	0.87	0.87
BIJOUTAP	115	Open Line BRUSHTAP 115-EFMORGTP 115 #1	73	0.89	0.88	0.88	0.88
BIJOUTAP	115	Open Line EFMORGTP 115-FMWEST 115 #1	73	0.90	0.90	0.90	0.90
BRUSHTAP	115	Open Line BEAVERCK 115-BRUSHTAP 115 #1	73	0.84	0.84	0.84	0.84
COMAN 1	24	Drop Generator at COMAN 1 24 #G1, 350 MW Dropped	70		0.94	0.95	0.95
COMAN 2	24	Drop Generator at COMAN 2 24 #G2, 350 MW Dropped	70		0.95	0.95	0.95
COORSREC	115	Open Xfmr FTLUPTON 115/FTLUPTON 230 #T3	70	0.95	0.95	0.95	0.95
DANIELPK	115	Open Xfmr DANIELPK 115/DANIELPK 230 #T1	70	0.95	0.95	0.95	0.95
ECKLEY	115	Open Line WRAY 115-WRAY TAP 115 #1	73	0.94	0.94	0.94	0.94
EFMORGTP	115	Open Line BEAVERCK 115-BRUSHTAP 115 #1	73	0.85	0.85	0.85	0.85
EFMORGTP	115	Open Line BRUSHTAP 115-EFMORGTP 115 #1	73	0.87	0.87	0.87	0.87
ENGLE3TP	115	Open Line ARAPAHOB 115-ENGLE3TP 115 #1	70	0.93	0.93	0.93	0.93
ENGLEWD3	115	Open Line ARAPAHOB 115-ENGLE3TP 115 #1	70	0.93	0.93	0.93	0.93
ENNIS	115	Open Xfmr FTLUPTON 115/FTLUPTON 230 #T3	70	0.94	0.94	0.94	0.94
EXCEL	115	Open Line BEAVERCK 115-BRUSHTAP 115 #1	73	0.85	0.85	0.85	0.85
EXCEL	115	Open Line BRUSHTAP 115-EFMORGTP 115 #1	73	0.87	0.87	0.87	0.87
EXCEL	115	Open Line EFMORGTP 115-FMWEST 115 #1	73	0.89	0.89	0.89	0.89
FLEMING	115	Open Line WAUNETA 115-2004G8 115 #1	73	0.94	0.94	0.94	0.94
FME	115	Open Line BEAVERCK 115-BRUSHTAP 115 #1	73	0.85	0.85	0.85	0.85
FME	115	Open Line BRUSHTAP 115-EFMORGTP 115 #1	73	0.87	0.87	0.87	0.87
FME	115	Open Line EFMORGTP 115-FMWEST 115 #1	73	0.89	0.89	0.88	0.88
FMN	115	Open Line BEAVERCK 115-BRUSHTAP 115 #1	73	0.85	0.85	0.85	0.85
FMN	115	Open Line BRUSHTAP 115-EFMORGTP 115 #1	73	0.87	0.87	0.87	0.87
FMS	115	Open Line BEAVERCK 115-BRUSHTAP 115 #1	73	0.85	0.85	0.85	0.85
FMS	115	Open Line BRUSHTAP 115-EFMORGTP 115 #1	73	0.87	0.87	0.87	0.87
FMS	115	Open Line EFMORGTP 115-FMWEST 115 #1	73	0.89	0.89	0.89	0.89
FMWEST	115	Open Line BEAVERCK 115-BRUSHTAP 115 #1	73	0.85	0.85	0.85	0.85
FMWEST	115	Open Line BRUSHTAP 115-EFMORGTP 115 #1	73	0.87	0.87	0.87	0.87
FMWEST	115	Open Line EFMORGTP 115-FMWEST 115 #1	73	0.89	0.89	0.89	0.89
FTLUP1-2	13.8	Open Xfmr FTLUPTON 115/FTLUPTON 230 #T3	70	0.95	0.95	0.95	0.95

2009 Heavy Summer - Category B Voltage Violations			Area	Case Per Unit Voltage			
Bus Name	**Base Voltage**	**Contingency Description**		**pre**	**pst-caer**	**pst-psco**	**pst-tsgt**
FTLUPTON	115	Open Xfmr FTLUPTON 115/FTLUPTON 230 #T3	70	0.95	0.95	0.95	0.95
FULTONTS	115	Open Xfmr FTLUPTON 115/FTLUPTON 230 #T3	70	0.95	0.95	0.95	0.95
GALIEN	115	Open Line WAUNETA 115-2004G8 115 #1	73	0.93	0.93	0.93	0.93
GILCREST	115	Open Xfmr FTLUPTON 115/FTLUPTON 230 #T3	70	0.94	0.94	0.94	0.94
GODFRETP	115	Open Line GREELEY 115-WELD PS 115 #1	70	0.95	0.95	0.95	0.95
GREELEY	115	Open Line GREELEY 115-WELD PS 115 #1	70	0.95	0.95	0.95	0.95
HUDSON	115	Open Xfmr FTLUPTON 115/FTLUPTON 230 #T3	70	0.94	0.94	0.94	0.94
JOHNSTN	115	Open Line GREELEY 115-WELD PS 115 #1	70	0.95	0.95	0.95	0.95
KIOWA CK	115	Open Line BEAVERCK 115-BRUSHTAP 115 #1	73	0.89	0.89	0.89	0.89
KIOWA CK	115	Open Line BRUSHTAP 115-EFMORGTP 115 #1	73	0.91	0.91	0.91	0.91
KIOWA CK	115	Open Line EFMORGTP 115-FMWEST 115 #1	73	0.92	0.92	0.92	0.92
LITTLET1	115	Open Line WATERTON 115-MARTN1TP 115 #1	70	0.93	0.93	0.93	0.93
LITTLET2	115	Open Line LITTLET2 115-MARTN1TP 115 #1	70	0.93	0.93	0.93	0.93
LITTLET2	115	Open Line WATERTON 115-MARTN1TP 115 #1	70	0.93	0.93	0.93	0.93
LKGRGE	115	Open Line TARRYALL 115-LKGRGE 115 #1	70	0.94	0.94	0.94	0.94
LKGRGE	115	Open Xfmr TARRYALL 115/TARRYALL 230 #T1	70	0.94	0.94	0.94	0.94
LOST CK	115	Open Line BEAVERCK 115-BRUSHTAP 115 #1	73	0.92	0.92	0.92	0.92
LOST CK	115	Open Line BRUSHTAP 115-EFMORGTP 115 #1	73	0.93	0.93	0.93	0.93
LOST CK	115	Open Line EFMORGTP 115-FMWEST 115 #1	73			0.94	0.94
LOSTCKTP	115	Open Line BEAVERCK 115-BRUSHTAP 115 #1	73	0.92	0.92	0.92	0.92
LOSTCKTP	115	Open Line BRUSHTAP 115-EFMORGTP 115 #1	73	0.93	0.93	0.93	0.93
LOSTCKTP	115	Open Line EFMORGTP 115-FMWEST 115 #1	73			0.94	0.94
MARTIN 1	115	Open Line WATERTON 115-MARTN1TP 115 #1	70	0.93	0.93	0.93	0.93
MARTN1TP	115	Open Line WATERTON 115-MARTN1TP 115 #1	70	0.93	0.93	0.93	0.93
MESSEX	115	Open Line BEAVERCK 115-MESSEX 115 #1	73	0.95	0.95	0.95	0.95
MONFORT	115	Open Line GREELEY 115-WELD PS 115 #1	70	0.95	0.95	0.95	0.95
ORCHARD	115	Open Line BEAVERCK 115-BRUSHTAP 115 #1	73	0.89	0.89	0.89	0.89
ORCHARD	115	Open Line BRUSHTAP 115-EFMORGTP 115 #1	73	0.91	0.91	0.91	0.91
ORCHARD	115	Open Line EFMORGTP 115-FMWEST 115 #1	73	0.92	0.92	0.92	0.92
PROSPEC	115	Open Line BEAVERCK 115-BRUSHTAP 115 #1	73	0.93	0.93	0.93	0.93
PROSPEC	115	Open Line BRUSHTAP 115-EFMORGTP 115 #1	73	0.94	0.94	0.93	0.93
PROSPVAL	115	Open Line BEAVERCK 115-BRUSHTAP 115 #1	73	0.92	0.92	0.92	0.92
PROSPVAL	115	Open Line BRUSHTAP 115-EFMORGTP 115 #1	73	0.93	0.93	0.93	0.93
PROSPVAL	115	Open Line EFMORGTP 115-FMWEST 115 #1	73	0.94	0.93	0.93	0.93
QF MNFRT	13.8	Open Line GREELEY 115-WELD PS 115 #1	70	0.92	0.92	0.92	0.92
ROBB	115	Open Line WRAY 115-WRAY TAP 115 #1	73	0.94	0.94	0.94	0.94
ROXBOROU	115	Open Line WATERTON 115-ROXBOROU 115 #1	70	0.95	0.95		0.95
TARRYALL	115	Open Xfmr TARRYALL 115/TARRYALL 230 #T1	70	0.94	0.94	0.94	0.94
UNC	115	Open Line GREELEY 115-WELD PS 115 #1	70	0.95	0.95	0.95	0.95
VASQUEZ	115	Open Xfmr FTLUPTON 115/FTLUPTON 230 #T3	70	0.94	0.94	0.94	0.94
VERNONLM	115	Open Line WRAY 115-WRAY TAP 115 #1	73	0.93	0.93	0.93	0.93
WIGGINS	115	Open Line BEAVERCK 115-BRUSHTAP 115 #1	73	0.91	0.91	0.91	0.91
WIGGINS	115	Open Line BRUSHTAP 115-EFMORGTP 115 #1	73	0.92	0.92	0.92	0.92
WIGGINS	115	Open Line EFMORGTP 115-FMWEST 115 #1	73	0.93	0.93	0.93	0.93
WRAY TAP	115	Open Line WRAY 115-WRAY TAP 115 #1	73	0.93	0.93	0.93	0.93

2009 Heavy Summer - Category B Voltage Violations			Area	Case Per Unit Voltage			
Bus Name	Base Voltage	Contingency Description		pre	pst-caer	pst-psco	pst-tsgt
WRAYWAPA	115	Open Line WRAY 115-WRAY TAP 115 #1	73	0.93	0.93	0.93	0.93
ZUNI1	13.8	Open Xfmr ZUNI1 13.8/DENVTM 115 #T7	70	1.03	1.03	1.03	1.03

2009 Heavy Summer - Category B Voltage Deviation Violations			Area	Case Percent Voltage Deviation			
Bus Name	Base Voltage	Contingency Description		pre	pst-caer	pst-psco	pst-tsgt
2006T3	115	Open Line BEAVERCK 115-BRUSHTAP 115 #1	73	-14	-14	-14	-14
2006T3	115	Open Line BRUSHTAP 115-EFMORGTP 115 #1	73	-12	-12	-12	-12
2006T3	115	Open Line EFMORGTP 115-FMWEST 115 #1	73	-10	-10	-10	-11
2006T3	12.5	Open Line BEAVERCK 115-BRUSHTAP 115 #1	73	-14	-14	-14	-14
2006T3	12.5	Open Line BRUSHTAP 115-EFMORGTP 115 #1	73	-12	-12	-12	-12
2006T3	12.5	Open Line EFMORGTP 115-FMWEST 115 #1	73	-10	-10	-10	-11
ARAP5-6	13.8	Open Xfmr ARAP5-6 13.8/ARAPAHOA 115 #56	70	5	5	5	5
BARLOW	115	Open Line BEAVERCK 115-BRUSHTAP 115 #1	73	-15	-15	-15	-15
BARLOW	115	Open Line BRUSHTAP 115-EFMORGTP 115 #1	73	-12	-12	-12	-12
BETHELLM	115	Open Line WRAY 115-WRAY TAP 115 #1	73	-5	-5	-5	-5
BIJOUTAP	115	Open Line BEAVERCK 115-BRUSHTAP 115 #1	73	-12	-12	-12	-12
BIJOUTAP	115	Open Line BRUSHTAP 115-EFMORGTP 115 #1	73	-10	-10	-10	-10
BIJOUTAP	115	Open Line EFMORGTP 115-FMWEST 115 #1	73	-9	-9	-9	-9
BRUSHTAP	115	Open Line BEAVERCK 115-BRUSHTAP 115 #1	73	-16	-17	-17	-17
COMAN 1	24	Drop Generator at COMAN 1 24 #G1, 350 MW Dropped	70		-5	-5	-5
COMAN 2	24	Drop Generator at COMAN 2 24 #G2, 350 MW Dropped	70		-5	-5	-5
COORSREC	115	Open Xfmr FTLUPTON 115/FTLUPTON 230 #T3	70	-6	-6	-6	-6
DANIELPK	115	Open Xfmr DANIELPK 115/DANIELPK 230 #T1	70	-6	-6	-6	-6
ECKLEY	115	Open Line WRAY 115-WRAY TAP 115 #1	73	-5	-5	-5	-5
EFMORGTP	115	Open Line BEAVERCK 115-BRUSHTAP 115 #1	73	-15	-15	-15	-15
EFMORGTP	115	Open Line BRUSHTAP 115-EFMORGTP 115 #1	73	-12	-12	-12	-12
ENGLE3TP	115	Open Line ARAPAHOB 115-ENGLE3TP 115 #1	70	-7	-7	-7	-7
ENGLEWD3	115	Open Line ARAPAHOB 115-ENGLE3TP 115 #1	70	-7	-7	-7	-7
ENNIS	115	Open Xfmr FTLUPTON 115/FTLUPTON 230 #T3	70	-6	-6	-6	-6
EXCEL	115	Open Line BEAVERCK 115-BRUSHTAP 115 #1	73	-14	-14	-14	-14
EXCEL	115	Open Line BRUSHTAP 115-EFMORGTP 115 #1	73	-12	-12	-12	-12
EXCEL	115	Open Line EFMORGTP 115-FMWEST 115 #1	73	-10	-10	-10	-10
FLEMING	115	Open Line WAUNETA 115-2004G8 115 #1	73	-5	-5	-5	-5
FME	115	Open Line BEAVERCK 115-BRUSHTAP 115 #1	73	-14	-14	-14	-14
FME	115	Open Line BRUSHTAP 115-EFMORGTP 115 #1	73	-12	-12	-12	-12
FME	115	Open Line EFMORGTP 115-FMWEST 115 #1	73	-10	-10	-10	-11
FMN	115	Open Line BEAVERCK 115-BRUSHTAP 115 #1	73	-15	-15	-15	-15
FMN	115	Open Line BRUSHTAP 115-EFMORGTP 115 #1	73	-12	-12	-12	-12
FMS	115	Open Line BEAVERCK 115-BRUSHTAP 115 #1	73	-14	-14	-14	-14
FMS	115	Open Line BRUSHTAP 115-EFMORGTP 115 #1	73	-12	-12	-12	-12
FMS	115	Open Line EFMORGTP 115-FMWEST 115 #1	73	-10	-10	-10	-10
FMWEST	115	Open Line BEAVERCK 115-BRUSHTAP 115 #1	73	-14	-14	-14	-14
FMWEST	115	Open Line BRUSHTAP 115-EFMORGTP 115 #1	73	-12	-12	-12	-12
FMWEST	115	Open Line EFMORGTP 115-FMWEST 115 #1	73	-10	-10	-10	-10

2009 Heavy Summer - Category B Voltage Deviation Violations			Area	Case Percent Voltage Deviation			
Bus Name	Base Voltage	Contingency Description		pre	pst-caer	pst-psco	pst-tsgt
FTLUP1-2	13.8	Open Xfmr FTLUPTON 115/FTLUPTON 230 #T3	70	-6	-6	-6	-6
FTLUPTON	115	Open Xfmr FTLUPTON 115/FTLUPTON 230 #T3	70	-6	-6	-6	-6
FULTONTS	115	Open Xfmr FTLUPTON 115/FTLUPTON 230 #T3	70	-5	-5	-5	-5
GALIEN	115	Open Line WAUNETA 115-2004G8 115 #1	73	-6	-6	-6	-6
GILCREST	115	Open Xfmr FTLUPTON 115/FTLUPTON 230 #T3	70	-6	-6	-6	-6
GODFRETP	115	Open Line GREELEY 115-WELD PS 115 #1	70	-6	-6	-6	-6
GREELEY	115	Open Line GREELEY 115-WELD PS 115 #1	70	-6	-6	-6	-6
HUDSON	115	Open Xfmr FTLUPTON 115/FTLUPTON 230 #T3	70	-6	-6	-6	-6
JOHNSTN	115	Open Line GREELEY 115-WELD PS 115 #1	70	-6	-6	-6	-6
KIOWA CK	115	Open Line BEAVERCK 115-BRUSHTAP 115 #1	73	-10	-10	-10	-10
KIOWA CK	115	Open Line BRUSHTAP 115-EFMORGTP 115 #1	73	-8	-8	-8	-8
KIOWA CK	115	Open Line EFMORGTP 115-FMWEST 115 #1	73	-7	-7	-7	-7
LITTLET1	115	Open Line WATERTON 115-MARTN1TP 115 #1	70	-5	-5	-5	-5
LITTLET2	115	Open Line WATERTON 115-MARTN1TP 115 #1	70	-6	-6	-6	-6
LITTLET2	115	Open Line LITTLET2 115-MARTN1TP 115 #1	70	-5	-5	-5	-5
LKGRGE	115	Open Line TARRYALL 115-LKGRGE 115 #1	70	-7	-7	-7	-7
LKGRGE	115	Open Xfmr TARRYALL 115/TARRYALL 230 #T1	70	-7	-7	-7	-7
LOST CK	115	Open Line BEAVERCK 115-BRUSHTAP 115 #1	73	-6	-6	-6	-6
LOST CK	115	Open Line BRUSHTAP 115-EFMORGTP 115 #1	73	-6	-6	-6	-6
LOST CK	115	Open Line EFMORGTP 115-FMWEST 115 #1	73			-5	-5
LOSTCKTP	115	Open Line BEAVERCK 115-BRUSHTAP 115 #1	73	-6	-6	-6	-6
LOSTCKTP	115	Open Line BRUSHTAP 115-EFMORGTP 115 #1	73	-6	-6	-6	-6
LOSTCKTP	115	Open Line EFMORGTP 115-FMWEST 115 #1	73			-5	-5
MARTIN 1	115	Open Line WATERTON 115-MARTN1TP 115 #1	70	-8	-8	-8	-8
MARTN1TP	115	Open Line WATERTON 115-MARTN1TP 115 #1	70	-8	-8	-8	-8
MESSEX	115	Open Line BEAVERCK 115-MESSEX 115 #1	73	-6	-6	-6	-6
MONFORT	115	Open Line GREELEY 115-WELD PS 115 #1	70	-5	-5	-5	-5
ORCHARD	115	Open Line BEAVERCK 115-BRUSHTAP 115 #1	73	-10	-10	-10	-10
ORCHARD	115	Open Line BRUSHTAP 115-EFMORGTP 115 #1	73	-8	-8	-8	-8
ORCHARD	115	Open Line EFMORGTP 115-FMWEST 115 #1	73	-7	-7	-7	-7
PROSPEC	115	Open Line BEAVERCK 115-BRUSHTAP 115 #1	73	-6	-6	-6	-6
PROSPEC	115	Open Line BRUSHTAP 115-EFMORGTP 115 #1	73	-6	-6	-6	-6
PROSPVAL	115	Open Line BEAVERCK 115-BRUSHTAP 115 #1	73	-6	-6	-6	-6
PROSPVAL	115	Open Line BRUSHTAP 115-EFMORGTP 115 #1	73	-6	-6	-6	-6
PROSPVAL	115	Open Line EFMORGTP 115-FMWEST 115 #1	73	-5	-5	-5	-5
QF MNFRT	13.8	Open Line GREELEY 115-WELD PS 115 #1	70	-5	-5	-6	-5
ROBB	115	Open Line WRAY 115-WRAY TAP 115 #1	73	-5	-5	-5	-5
ROXBOROU	115	Open Line WATERTON 115-ROXBOROU 115 #1	70	-5	-5		-5
TARRYALL	115	Open Xfmr TARRYALL 115/TARRYALL 230 #T1	70	-7	-7	-7	-7
UNC	115	Open Line GREELEY 115-WELD PS 115 #1	70	-5	-5	-5	-5
VASQUEZ	115	Open Xfmr FTLUPTON 115/FTLUPTON 230 #T3	70	-6	-6	-6	-6
VERNONLM	115	Open Line WRAY 115-WRAY TAP 115 #1	73	-5	-6	-6	-6
WIGGINS	115	Open Line BEAVERCK 115-BRUSHTAP 115 #1	73	-9	-9	-9	-9
WIGGINS	115	Open Line BRUSHTAP 115-EFMORGTP 115 #1	73	-7	-7	-7	-7
WIGGINS	115	Open Line EFMORGTP 115-FMWEST 115 #1	73	-6	-6	-6	-6

2009 Heavy Summer - Category B Voltage Deviation Violations			Area	Case Percent Voltage Deviation			
Bus Name	**Base Voltage**	**Contingency Description**		**pre**	**pst-caer**	**pst-psco**	**pst-tsgt**
WRAY TAP	115	Open Line WRAY 115-WRAY TAP 115 #1	73	-9	-9	-9	-9
WRAYWAPA	115	Open Line WRAY 115-WRAY TAP 115 #1	73	-9	-9	-9	-9
ZUNI1	13.8	Open Xfmr ZUNI1 13.8/DENVTM 115 #T7	70	8	8	8	8

2009 Light Winter

No Category A Normal Voltage Violations

2009 Light Winter - Category B Voltage Violations			Area	Case Per Unit Voltage			
Bus Name	**Base Voltage**	**Contingency Description**		**pre**	**pst-caer**	**pst-psco**	**pst-tsgt**
ARAP5-6	13.8	Open Xfmr ARAP5-6 13.8/ARAPAHOA 115 #56	70	1.03	1.03	1.03	1.03
ARAP7	13.8	Open Xfmr ARAP7 13.8/ARAPAHOA 115 #U7	70	1.03	1.03	1.03	1.03
ARICKARE	115	Open Line B.SANDY 230-BURLNGTN 230 #1	73		0.92	0.92	0.92
BONNY CK	115	Open Line B.SANDY 230-BURLNGTN 230 #1	73		0.93	0.93	0.93
HELL CK	115	Open Line B.SANDY 230-BURLNGTN 230 #1	73		0.92	0.92	0.92
HELL TAP	115	Open Line B.SANDY 230-BURLNGTN 230 #1	73		0.92	0.92	0.92
IDALIA	115	Open Line B.SANDY 230-BURLNGTN 230 #1	73		0.90	0.90	0.90
JOES	115	Open Line B.SANDY 230-BURLNGTN 230 #1	73		0.92	0.92	0.92
LIBERTY	115	Open Line B.SANDY 230-BURLNGTN 230 #1	73		0.92	0.92	0.92
MARTIN 1	115	Open Line WATERTON 115-MARTN1TP 115 #1	70	0.97	0.97	0.97	0.97
MARTN1TP	115	Open Line WATERTON 115-MARTN1TP 115 #1	70	0.97	0.97	0.97	0.97
PLNENDG3	13.8	Open Xfmr PLNENDG3 13.8/PLNENDSS 230 #U3	70	1.03	1.03	1.03	1.03
PLNENDG4	13.8	Open Xfmr PLNENDG4 13.8/PLNENDSS 230 #U4	70	1.03	1.03	1.03	1.03
QF MNFRT	13.8	Drop Generator at QF MNFRT 13.8 #G1, 30 MW Dropped	70	0.97	0.97	0.97	0.97
SAGEBRSH	115	Open Line B.SANDY 230-BURLNGTN 230 #1	73		0.92	0.92	0.92
SANDHILL	115	Open Line B.SANDY 230-BURLNGTN 230 #1	73		0.94	0.94	0.94
SO. FORK	115	Open Line B.SANDY 230-BURLNGTN 230 #1	73		0.92	0.92	0.92
ST.VRAIN	22	Open Xfmr ST.VRAIN 22/ST.VRAIN 230 #U1	70	0.96	0.96	0.96	0.96
VERNONTP	115	Open Line B.SANDY 230-BURLNGTN 230 #1	73		0.91	0.91	0.91
WRAY	115	Open Line B.SANDY 230-BURLNGTN 230 #1	73		0.93	0.93	0.93
WRAY TAP	115	Open Line B.SANDY 230-BURLNGTN 230 #1	73		0.93	0.93	0.93
WRAYWAPA	115	Open Line B.SANDY 230-BURLNGTN 230 #1	73		0.93	0.93	0.93
ZUNI1	13.8	Open Xfmr ZUNI1 13.8/DENVTM 115 #T7	70	1.03	1.03	1.03	1.03

2009 Light Winter - Category B Voltage Deviation Violations			Area	Case Percent Voltage Deviation			
Bus Name	**Base Voltage**	**Contingency Description**		**pre**	**pst-caer**	**pst-psco**	**pst-tsgt**
ARAP5-6	13.8	Open Xfmr ARAP5-6 13.8/ARAPAHOA 115 #56	70	7	7	7	7
ARAP7	13.8	Open Xfmr ARAP7 13.8/ARAPAHOA 115 #U7	70	7	7	7	7
ARICKARE	115	Open Line B.SANDY 230-BURLNGTN 230 #1	73		-9	-9	-9
BONNY CK	115	Open Line B.SANDY 230-BURLNGTN 230 #1	73		-8	-8	-8
HELL CK	115	Open Line B.SANDY 230-BURLNGTN 230 #1	73		-9	-9	-9
HELL TAP	115	Open Line B.SANDY 230-BURLNGTN 230 #1	73		-10	-10	-10
IDALIA	115	Open Line B.SANDY 230-BURLNGTN 230 #1	73		-12	-12	-12
JOES	115	Open Line B.SANDY 230-BURLNGTN 230 #1	73		-9	-9	-9
LIBERTY	115	Open Line B.SANDY 230-BURLNGTN 230 #1	73		-9	-9	-9
MARTIN 1	115	Open Line WATERTON 115-MARTN1TP 115 #1	70	-5	-5	-5	-5
MARTN1TP	115	Open Line WATERTON 115-MARTN1TP 115 #1	70	-5	-5	-5	-5
PLNENDG3	13.8	Open Xfmr PLNENDG3 13.8/PLNENDSS 230 #U3	70	6	6	6	6
PLNENDG4	13.8	Open Xfmr PLNENDG4 13.8/PLNENDSS 230 #U4	70	6	6	6	6
QF MNFRT	13.8	Drop Generator at QF MNFRT 13.8 #G1, 30 MW Dropped	70	-7	-7	-8	-7
SAGEBRSH	115	Open Line B.SANDY 230-BURLNGTN 230 #1	73		-9	-9	-9
SANDHILL	115	Open Line B.SANDY 230-BURLNGTN 230 #1	73		-8	-8	-8
SO. FORK	115	Open Line B.SANDY 230-BURLNGTN 230 #1	73		-9	-9	-9
ST.VRAIN	22	Open Xfmr ST.VRAIN 22/ST.VRAIN 230 #U1	70	-5	-5	-6	-5
VERNONTP	115	Open Line B.SANDY 230-BURLNGTN 230 #1	73		-12	-12	-12
WRAY	115	Open Line B.SANDY 230-BURLNGTN 230 #1	73		-9	-9	-9
WRAY TAP	115	Open Line B.SANDY 230-BURLNGTN 230 #1	73		-9	-9	-9
WRAYWAPA	115	Open Line B.SANDY 230-BURLNGTN 230 #1	73		-9	-9	-9
ZUNI1	13.8	Open Xfmr ZUNI1 13.8/DENVTM 115 #T7	70	7	7	7	7

For 2009 Light Winter, Burlington - Big Sandy 230 kV line outage solved manually due to divergence in power flow analysis (Wray reactors/capacitors required manual switching)

Appendix C - Power Flow Plots

Plot	Description
Plot #1	2009 Heavy Summer Pre-Project: Normal Conditions (MVA/% Rate)
Plot #2	2009 Heavy Summer Post-Project to Xcel PSCO: Normal Conditions (MVA/% Rate)
Plot #3	2009 Heavy Summer Post-Project to Tri-State: Normal Conditions (MVA/% Rate)
Plot #4	2009 Heavy Summer Post-Project to California as ER: Normal Conditions (MVA/% Rate)
Plot #5	2009 Light Winter Pre-Project: Normal Conditions (MVA/% Rate)
Plot #6	2009 Light Winter Post-Project to Xcel PSCO: Normal Conditions (MVA/% Rate)
Plot #7	2009 Light Winter Post-Project to Tri-State: Normal Conditions (MVA/% Rate)
Plot #8	2009 Light Winter Post-Project to California as ER: Normal Conditions (MVA/% Rate)
Plot #9	2009 Heavy Summer Pre-Project: Big Sandy - Burlington 230 kV line outage (MVA/% Rate)
Plot #10	2009 Heavy Summer Post-Project to Xcel PSCO: Big Sandy - Burlington 230 kV line outage (MVA/% Rate)
Plot #11	2009 Heavy Summer Post-Project to Tri-State: Big Sandy - Burlington 230 kV line outage (MVA/% Rate)
Plot #12	2009 Heavy Summer Post-Project to California as ER: Big Sandy - Burlington 230 kV line outage (MVA/% Rate)
Plot #13	2009 Light Winter Pre-Project: Big Sandy - Burlington 230 kV line outage (MVA/% Rate)
Plot #14	2009 Light Winter Post-Project to Xcel PSCO: Big Sandy - Burlington 230 kV line outage (MVA/% Rate)
Plot #15	2009 Light Winter Post-Project to Tri-State: Big Sandy - Burlington 230 kV line outage (MVA/% Rate)
Plot #16	2009 Light Winter Post-Project to California as ER: Big Sandy - Burlington 230 kV line outage (MVA/% Rate)
Plot #17	2009 Heavy Summer Post-Project to Xcel PSCO Mitigation 1: Normal Conditions (MVA/% Rate)
Plot #18	2009 Heavy Summer Post-Project to Tri-State Mitigation 1: Normal Conditions (MVA/% Rate)
Plot #19	2009 Heavy Summer Post-Project to California as ER Mitigation 1: Normal Conditions (MVA/% Rate)
Plot #20	2009 Light Winter Post-Project to Xcel PSCO Mitigation 1: Normal Conditions (MVA/% Rate)
Plot #21	2009 Light Winter Post-Project to Tri-State Mitigation 1: Normal Conditions (MVA/% Rate)
Plot #22	2009 Light Winter Post-Project to California as ER Mitigation 1: Normal Conditions (MVA/% Rate)
Plot #23	2009 Heavy Summer Post-Project to Xcel PSCO Mitigation 1: Big Sandy - Burlington 230 kV line outage (MVA/% Rate)
Plot #24	2009 Heavy Summer Post-Project to Tri-State Mitigation 1: Big Sandy - Burlington 230 kV line outage (MVA/% Rate)
Plot #25	2009 Heavy Summer Post-Project to California as ER Mitigation 1: Big Sandy - Burlington 230 kV line outage (MVA/% Rate)
Plot #26	2009 Light Winter Post-Project to Xcel PSCO Mitigation 1: Big Sandy - Burlington 230 kV line outage (MVA/% Rate)
Plot #27	2009 Light Winter Post-Project to Tri-State Mitigation 1: Big Sandy - Burlington 230 kV line outage (MVA/% Rate)
Plot #28	2009 Light Winter Post-Project to California as ER Mitigation 1: Big Sandy - Burlington 230 kV line outage (MVA/% Rate)
Plot #29	2009 Light Winter Post-Project to Xcel PSCO Mitigation 1: Big Sandy - Smoky Hill 230 kV line outage (MVA/% Rate)
Plot #30	2009 Light Winter Post-Project to Tri-State Mitigation 1: Big Sandy - Smoky Hill 230 kV line outage (MVA/% Rate)
Plot #31	2009 Light Winter Post-Project to California as ER Mitigation 1: Big Sandy - Smoky Hill 230 kV line outage (MVA/% Rate)

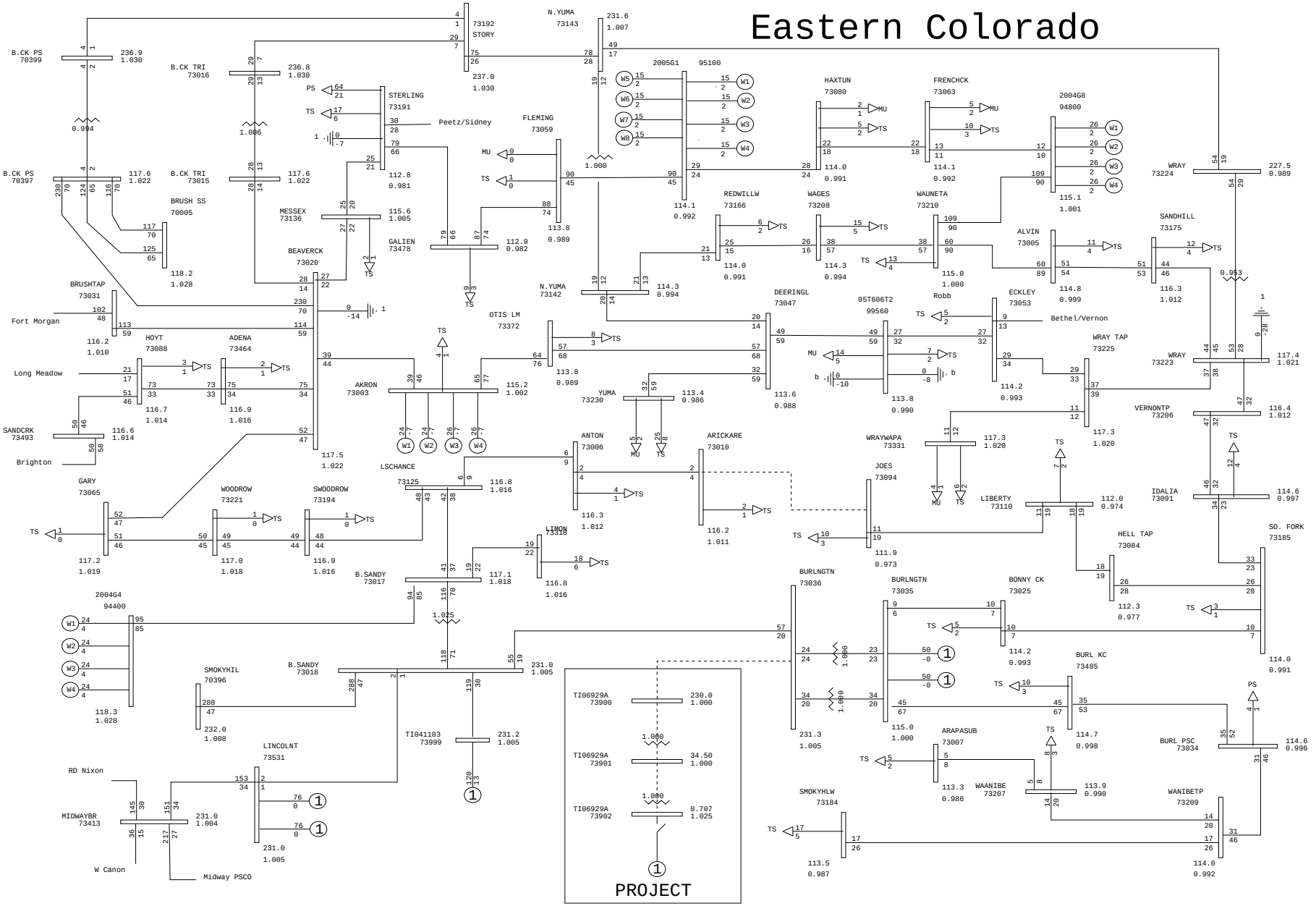

General Electric International, Inc. PSLF Program Sat Mar 24 09:08:17 2007 cases\hs\09hs-060929a-r4-pre.sav

TRI-STATE Generation and Transmission Association Inc.	2009 Heavy Summer Revision 4 TI-060929A Pre-Project Case	Plot 001 - Eastern Colorado Normal Conditions	MVA/%rate draw\tri-state-ec.drw Rating = 1

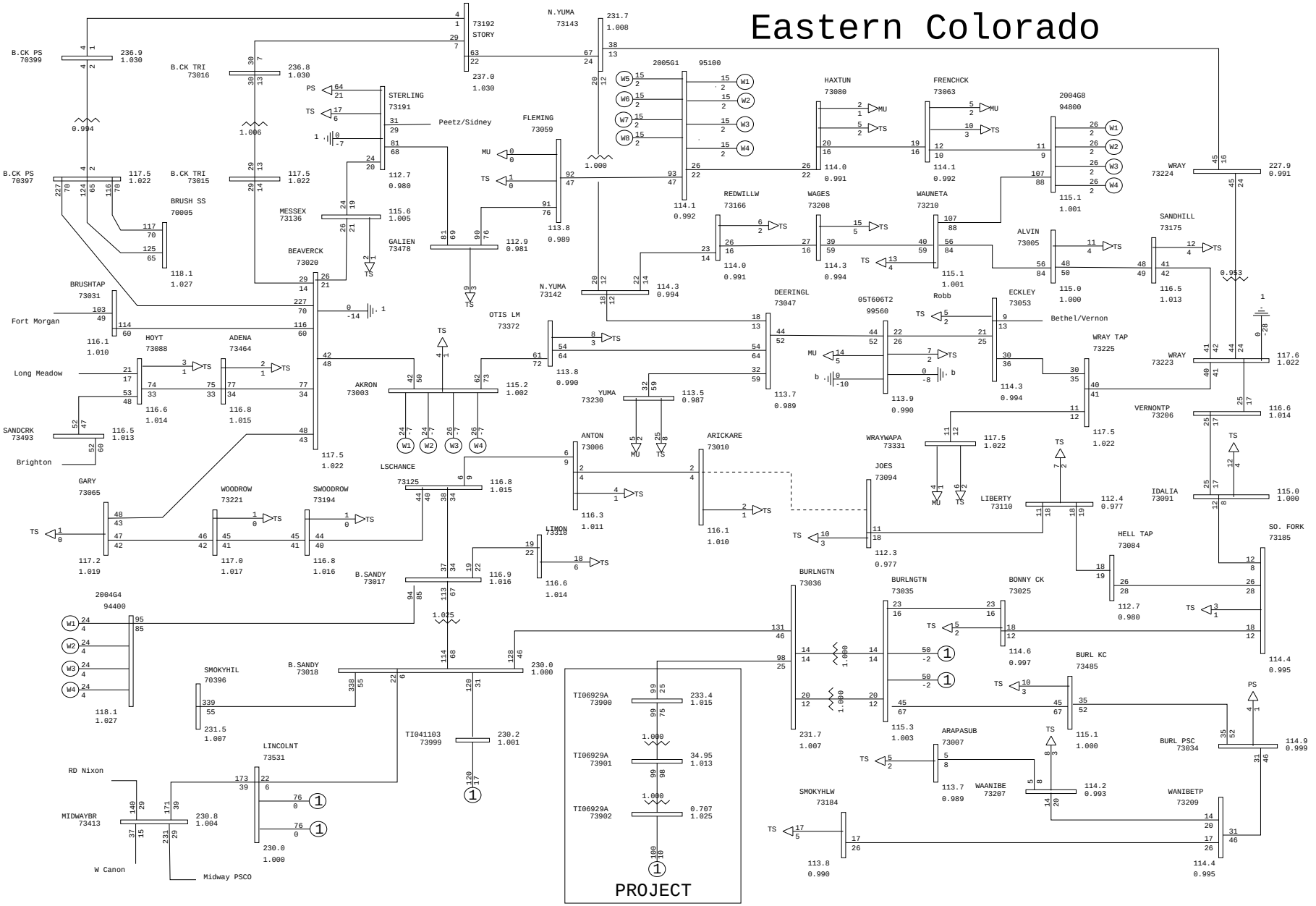

General Electric International, Inc. PSLF Program Sat Mar 24 09:08:18 2007 cases\hs\09hs-060929a-r4-pst-psco.sav

TRI-STATE Generation and Transmission Association Inc.	2009 Heavy Summer Revision 4 TI-060929A Post-Project Case to PSCO 100 MW at Burlington delivered to Area 70 PSCO Xcel Energy	Plot 002 - Eastern Colorado Normal Conditions	MVA/%rate draw\tri-state-ec.drw Rating = 1

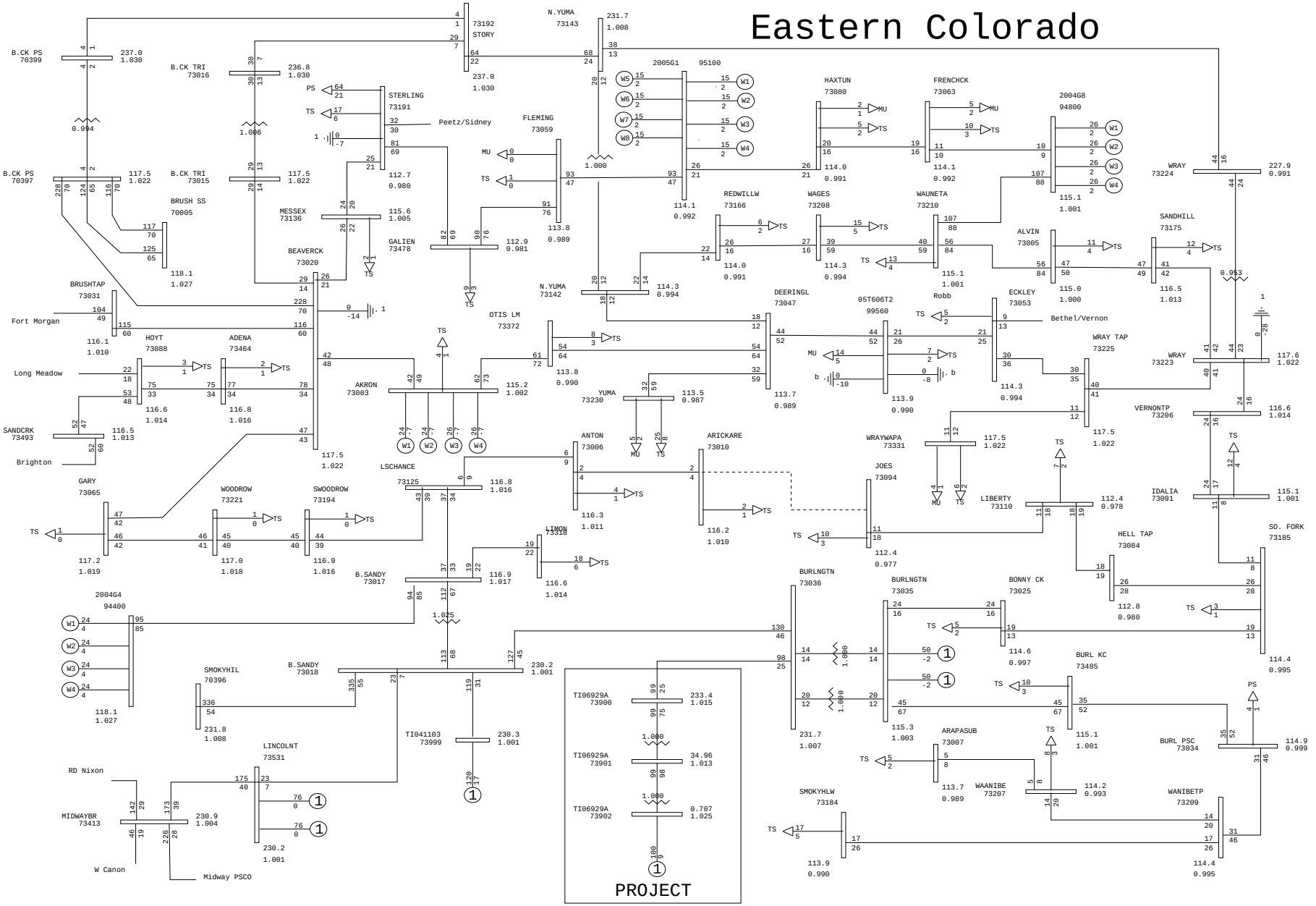

General Electric International, Inc. PSLF Program Sat Mar 24 09:08:19 2007 cases\hs\09hs-060929a-r4-pst-tsgt.sav

TRI-STATE Generation and Transmission Association Inc.	2009 Heavy Summer Revision 4 TI-060929A Post-Project Case to Tri-State 100 MW at Burlington delivered to Tri-State	Plot 003 - Eastern Colorado Normal Conditions	MVA/%rate draw\tri-state-ec.drw Rating = 1

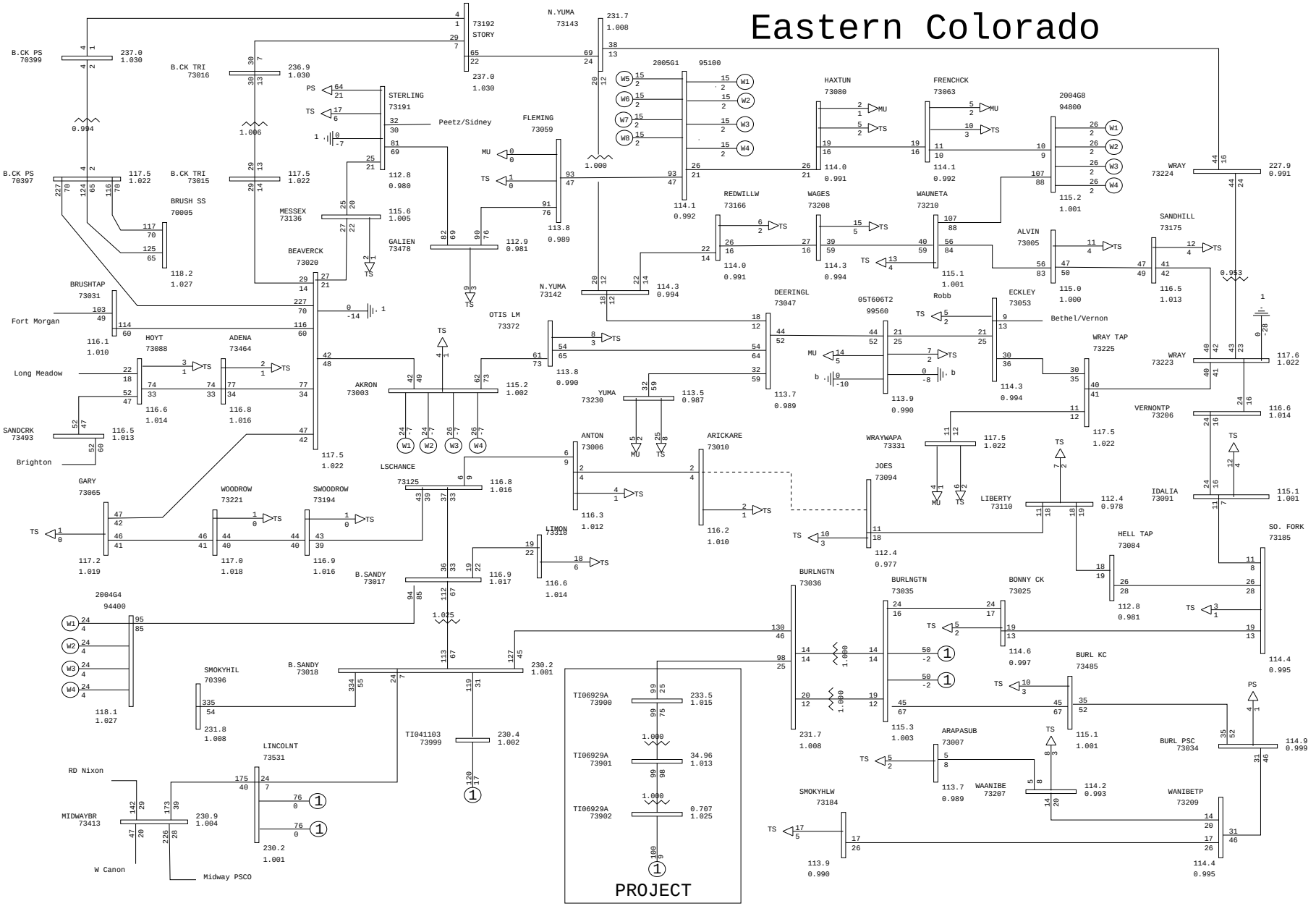

General Electric International, Inc. PSLF Program Sat Mar 24 09:08:20 2007 cases\hs\09hs-060929a-r4-pst-caer.sav

TRI-STATE Generation and Transmission Association Inc.	2009 Heavy Summer Revision 4 TI-060929A Post-Project Case to CA-ER 100 MW at Burlington delivered to Area 30 PG&E as Energy Resource	Plot 004 - Eastern Colorado Normal Conditions	MVA/%rate draw\tri-state-ec.drw Rating = 1

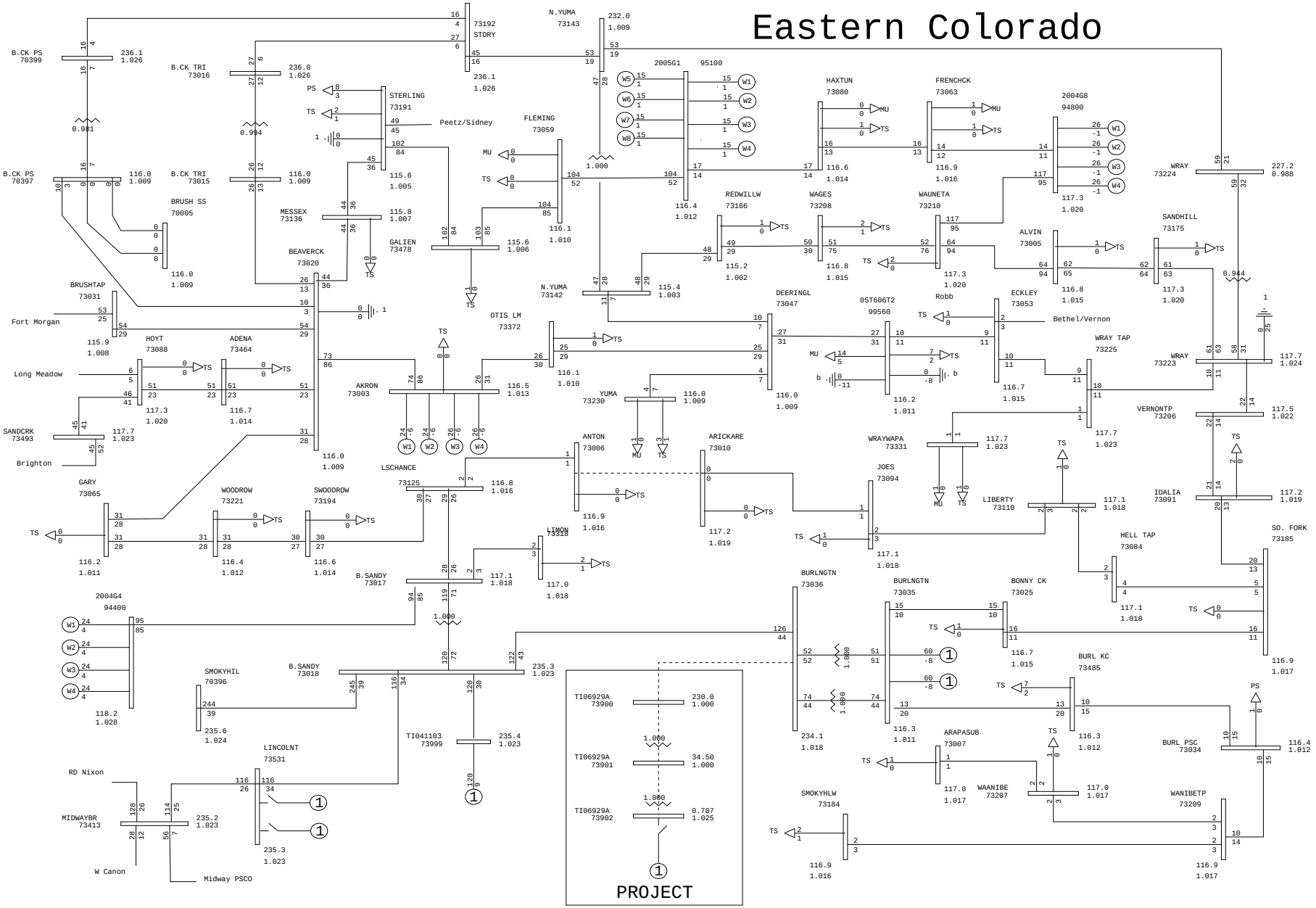

General Electric International, Inc. PSLF Program Sat Mar 24 09:08:21 2007 cases\lw\09lw-060929a-r4-pre.sav

TRI-STATE Generation and Transmission Association Inc.	2009 Light Winter Revision 4 TI-060929A Pre-Project Case	Plot 005 - Eastern Colorado Normal Conditions	MVA/%rate draw\tri-state-ec.drw Rating = 1

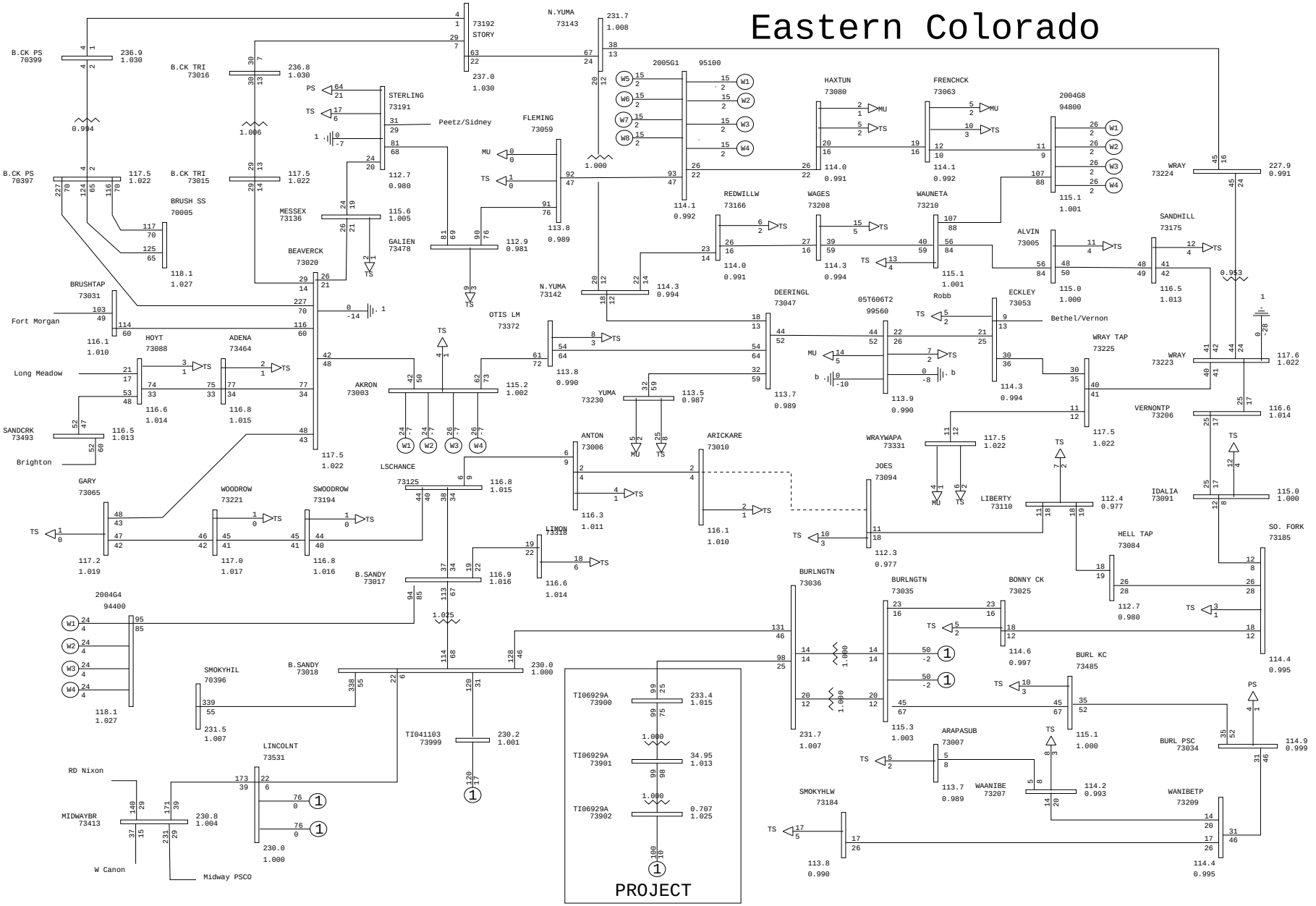

General Electric International, Inc. PSLF Program Sat Mar 24 09:08:22 2007 cases\hs\09hs-060929a-r4-pst-psco.sav

TRI-STATE Generation and Transmission Association Inc.	2009 Heavy Summer Revision 4 TI-060929A Post-Project Case to PSCO 100 MW at Burlington delivered to Area 70 PSCO Xcel Energy	Plot 006 - Eastern Colorado Normal Conditions	MVA/%rate draw\tri-state-ec.drw Rating = 1

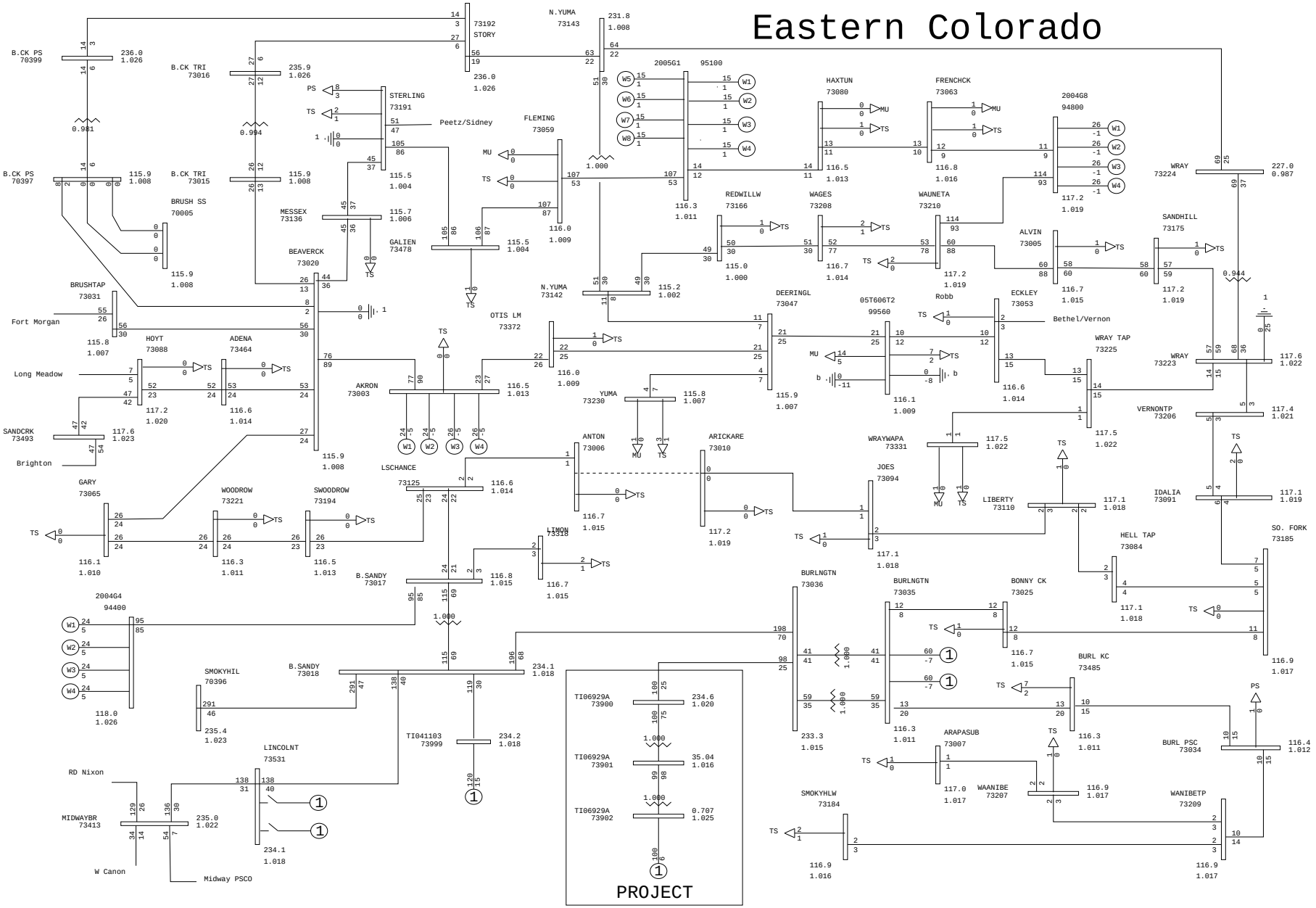

General Electric International, Inc. PSLF Program Sat Mar 24 09:08:23 2007 cases\lw\09lw-060929a-r4-pst-tsgt.sav

TRI-STATE Generation and Transmission Association Inc.	2009 Light Winter Revision 4 TI-060929A Post-Project Case to Tri-State 100 MW at Burlington delivered to Tri-State	Plot 007 - Eastern Colorado Normal Conditions	MVA/%rate draw\tri-state-ec.drw Rating = 1

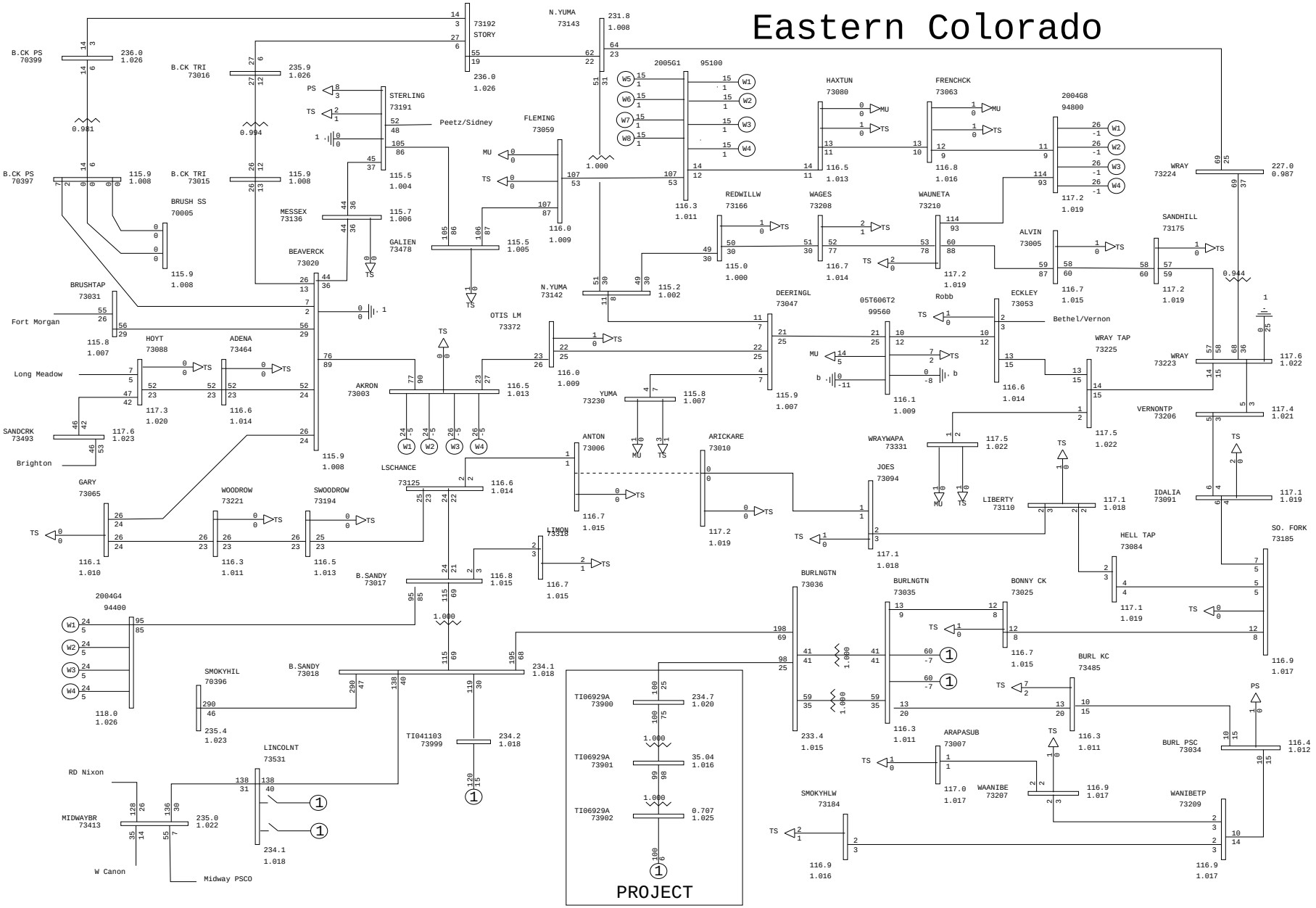

General Electric International, Inc. PSLF Program Sat Mar 24 09:08:24 2007 cases\lw\09lw-060929a-r4-pst-caer.sav

TRI-STATE Generation and Transmission Association Inc.	2009 Light Winter Revision 4 TI-060929A Post-Project Case to CA-ER 100 MW at Burlington delivered to Area 30 PG&E as Energy Resource	Plot 008 - Eastern Colorado Normal Conditions	MVA/%rate draw\tri-state-ec.drw Rating = 1

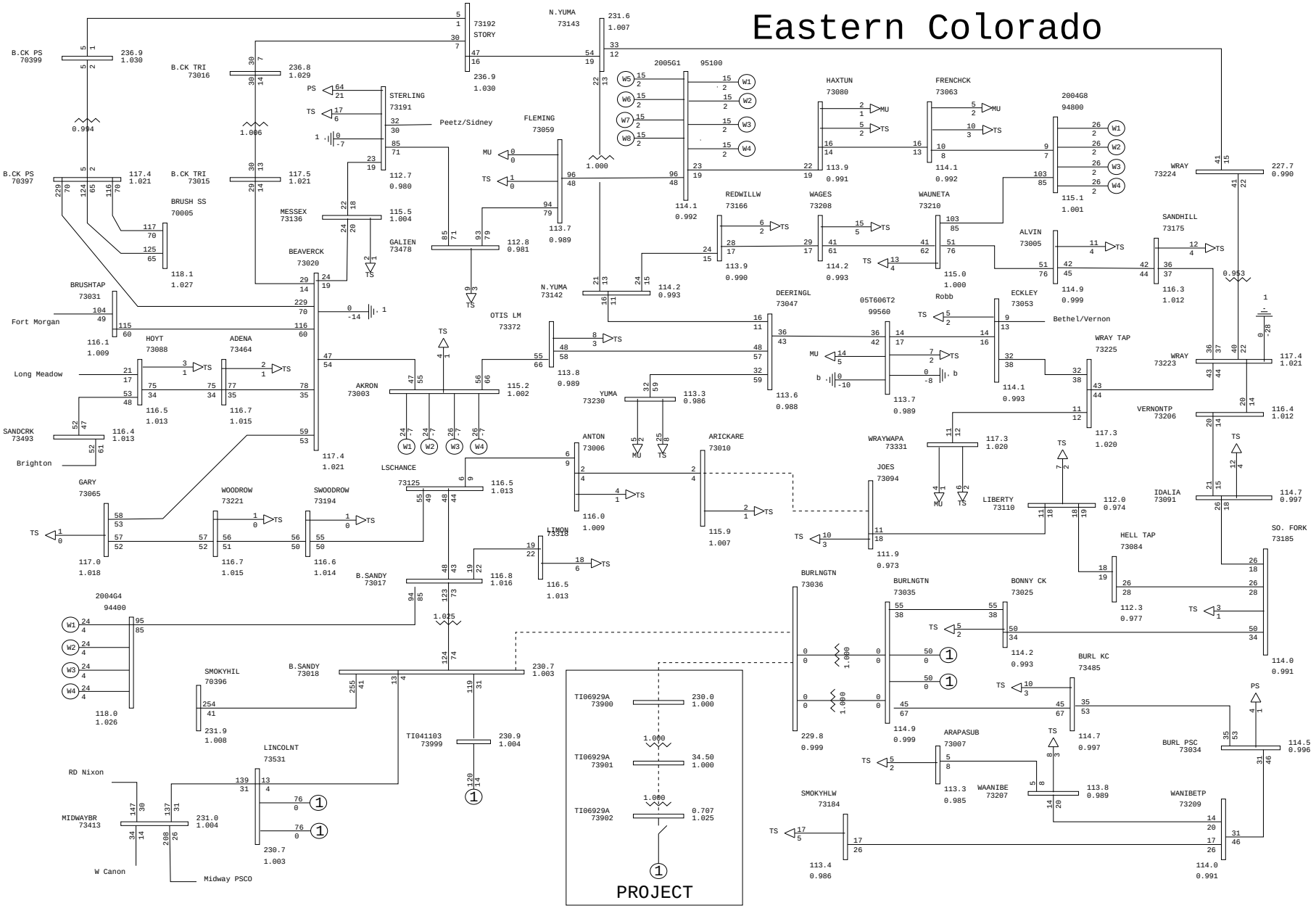

General Electric International, Inc. PSLF Program Sat Mar 24 09:08:26 2007 cases\hs\09hs-060929a-r4-pre.sav

TRI-STATE Generation and Transmission Association Inc.	2009 Heavy Summer Revision 4 TI-060929A Pre-Project Case	Plot 009 - Eastern Colorado Big Sandy - Burlington 230 kV line outage	MVA/%rate draw\tri-state-ec.drw Rating = 2

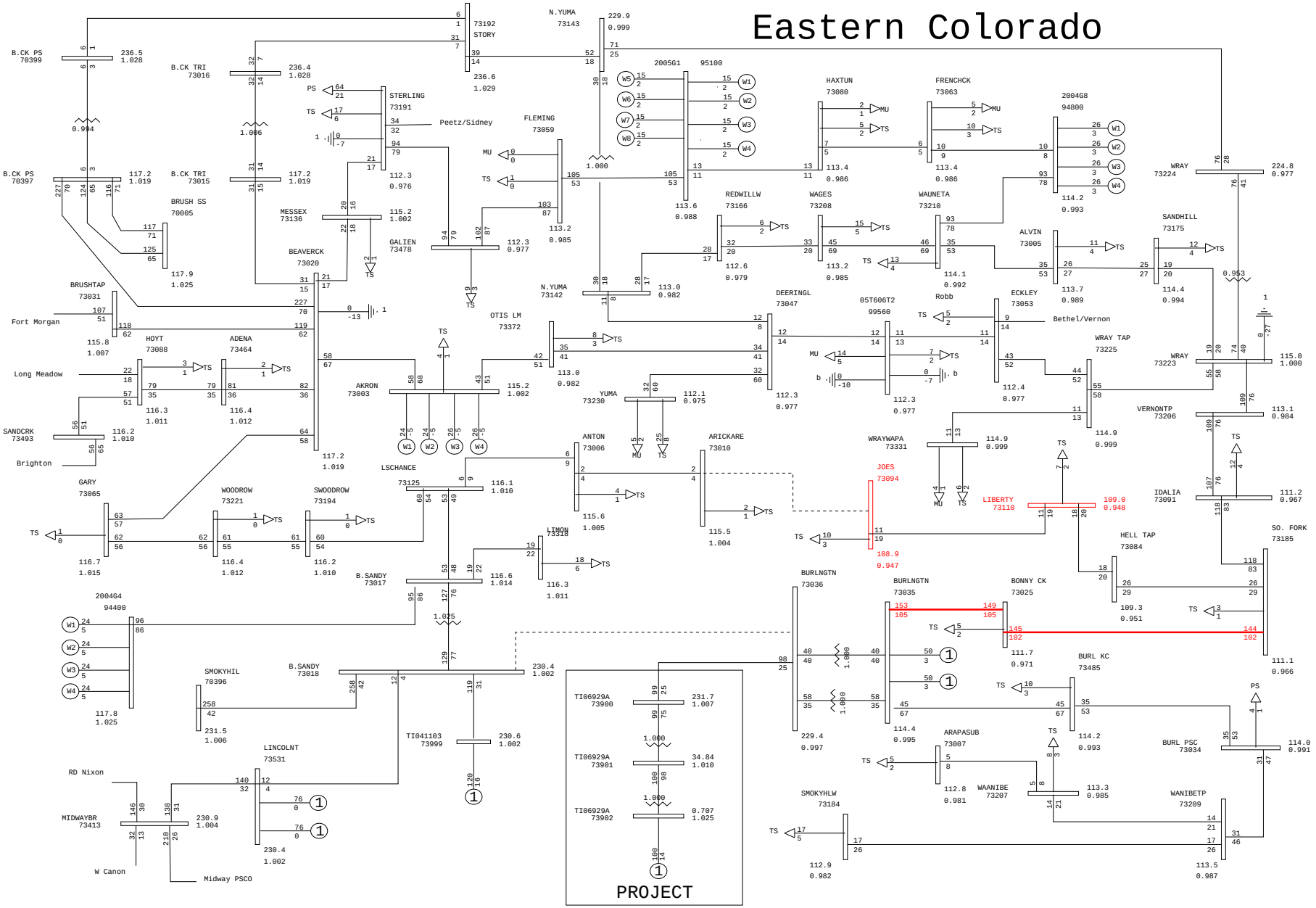

General Electric International, Inc. PSLF Program Sat Mar 24 09:08:29 2007 cases\hs\09hs-060929a-r4-pst-psco.sav

TRI-STATE Generation and Transmission Association Inc.	2009 Heavy Summer Revision 4 TI-060929A Post-Project Case to PSCO 100 MW at Burlington delivered to Area 70 PSCO Xcel Energy	Plot 010 - Eastern Colorado Big Sandy - Burlington 230 kV line outage	MVA/%rate draw\tri-state-ec.drw Rating = 2

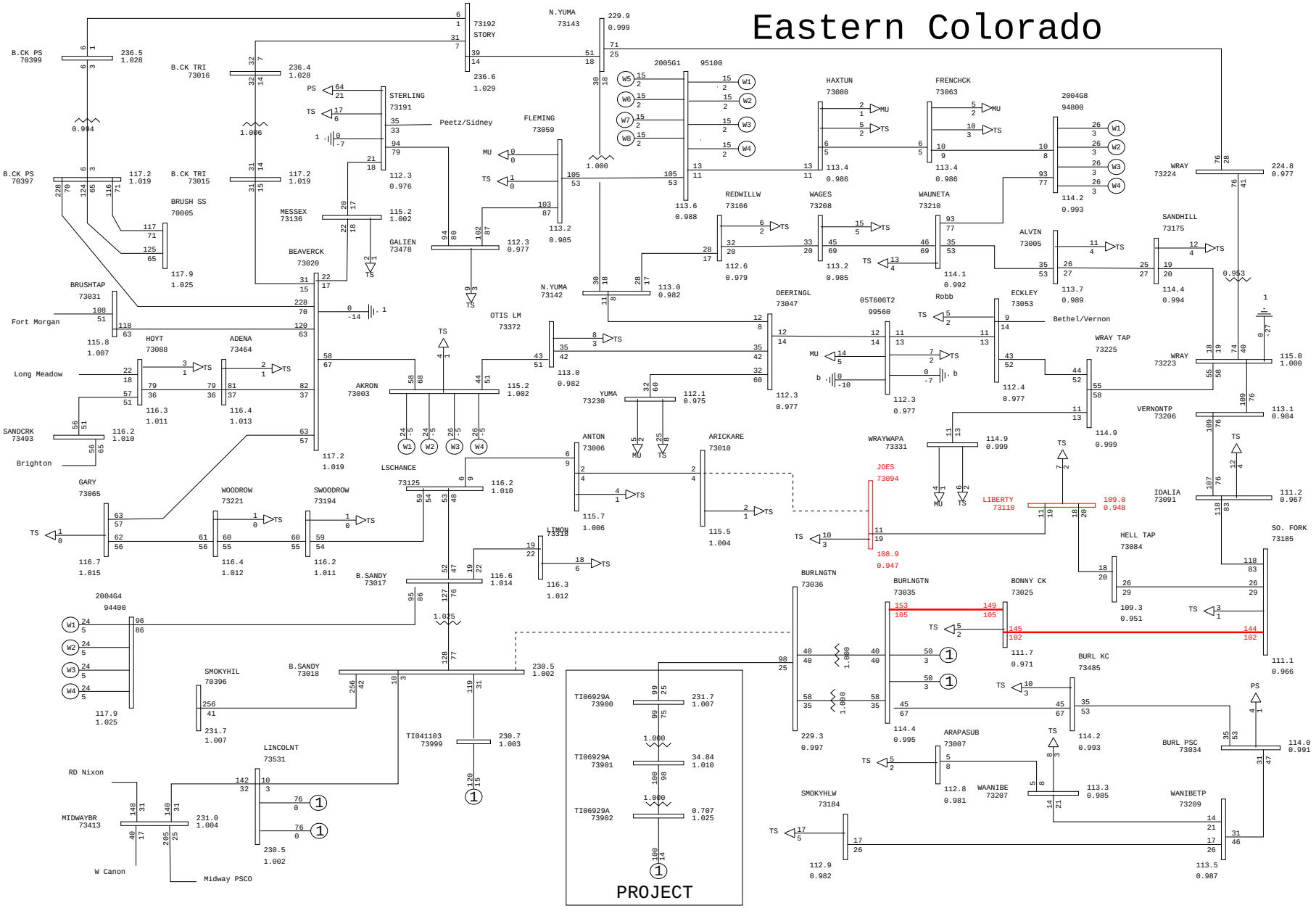

General Electric International, Inc. PSLF Program Sat Mar 24 09:08:32 2007 cases\hs\09hs-060929a-r4-pst-tsgt.sav

TRI-STATE Generation and Transmission Association Inc.	2009 Heavy Summer Revision 4 TI-060929A Post-Project Case to Tri-State 100 MW at Burlington delivered to Tri-State	Plot 011 - Eastern Colorado Big Sandy - Burlington 230 kV line outage	MVA/%rate draw\tri-state-ec.drw Rating = 2

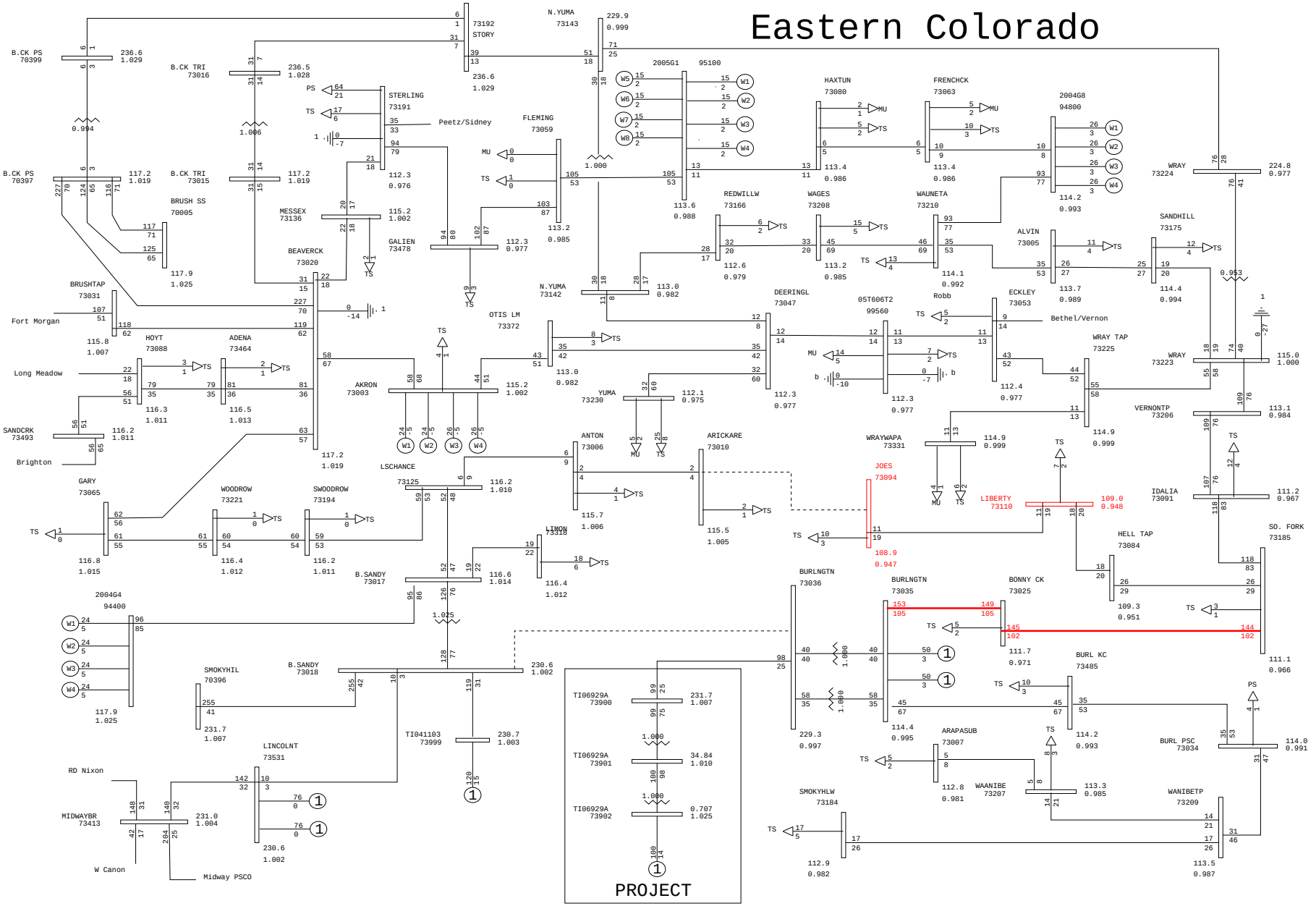

General Electric International, Inc. PSLF Program Sat Mar 24 09:08:34 2007 cases\hs\09hs-060929a-r4-pst-caer.sav

TRI-STATE Generation and Transmission Association Inc.	2009 Heavy Summer Revision 4 TI-060929A Post-Project Case to CA-ER 100 MW at Burlington delivered to Area 30 PG&E as Energy Resource	Plot 012 - Eastern Colorado Big Sandy - Burlington 230 kV line outage	MVA/%rate draw\tri-state-ec.drw Rating = 2

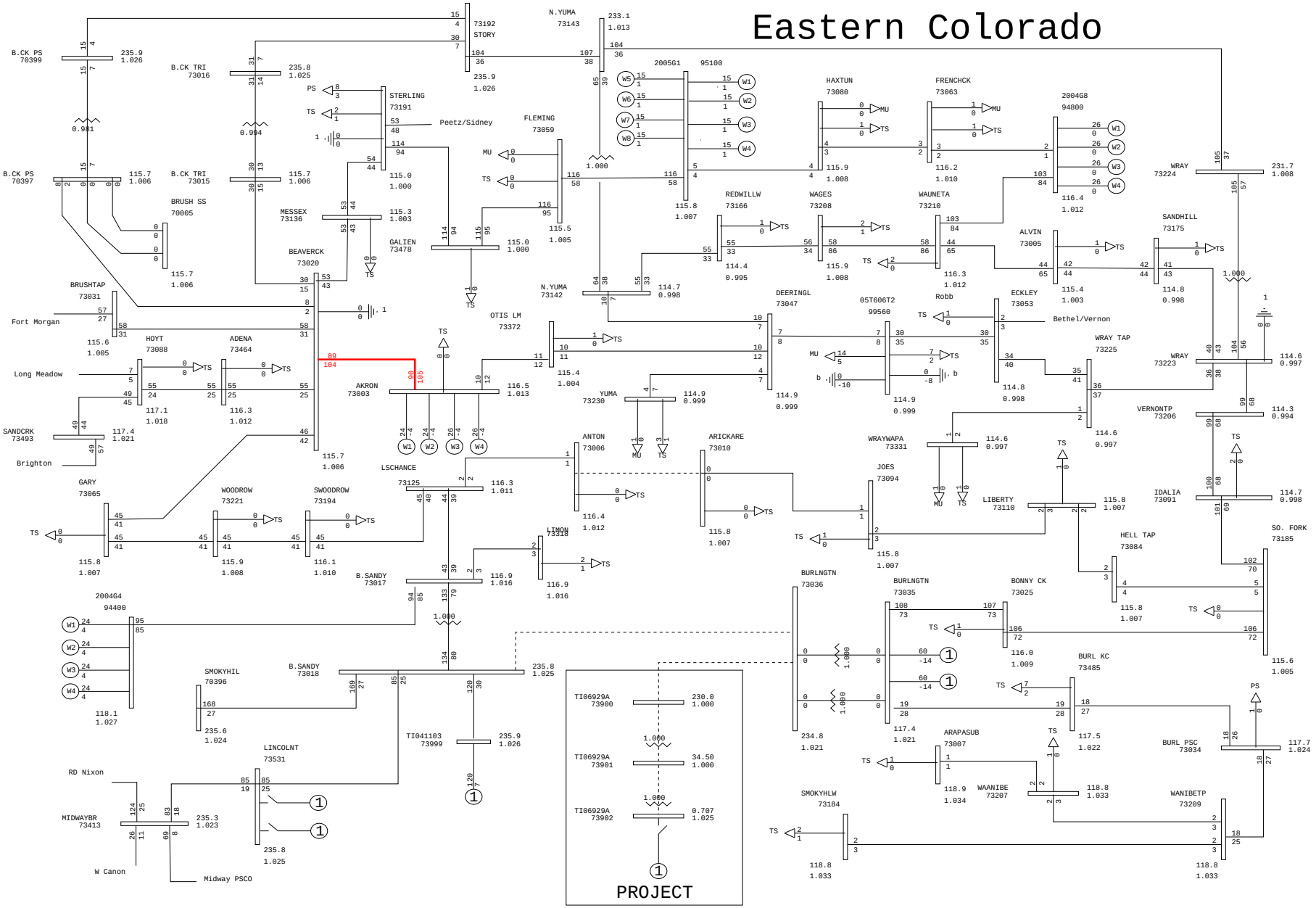

General Electric International, Inc. PSLF Program Sat Mar 24 09:08:35 2007 cases\lw\r4\cont\09lw-060929a-r4-pre_bsy-brl230.sav

TRI-STATE Generation and Transmission Association Inc.	2009 Light Winter Revision 4 TI-060929A Pre-Project Case	Plot 013 - Eastern Colorado Big Sandy - Burlington 230 kV line outage	MVA/%rate draw\tri-state-ec.drw Rating = 2

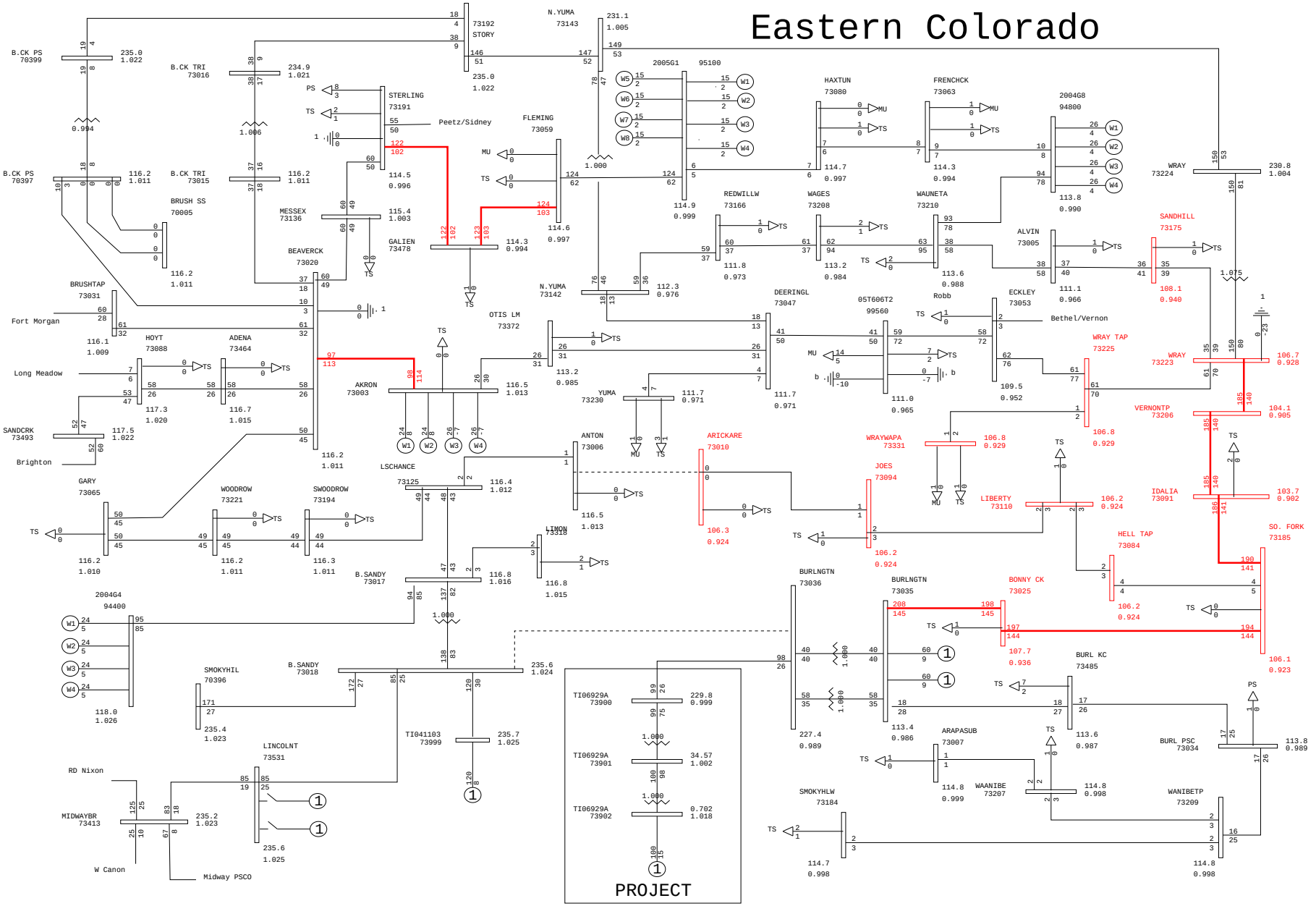

General Electric International, Inc. PSLF Program Sat Mar 24 09:08:36 2007 cases\lw\r4\cont\09lw-060929a-r4-pst-psco_bsy-brl230.sav

TRI-STATE Generation and Transmission Association Inc.	2009 Light Winter Revision 4 TI-060929A Post-Project Case to PSCO 100 MW at Burlington delivered to Area 70 PSCO Xcel Energy	Plot 014 - Eastern Colorado Big Sandy - Burlington 230 kV line outage	MVA/%rate draw\tri-state-ec.drw Rating = 2

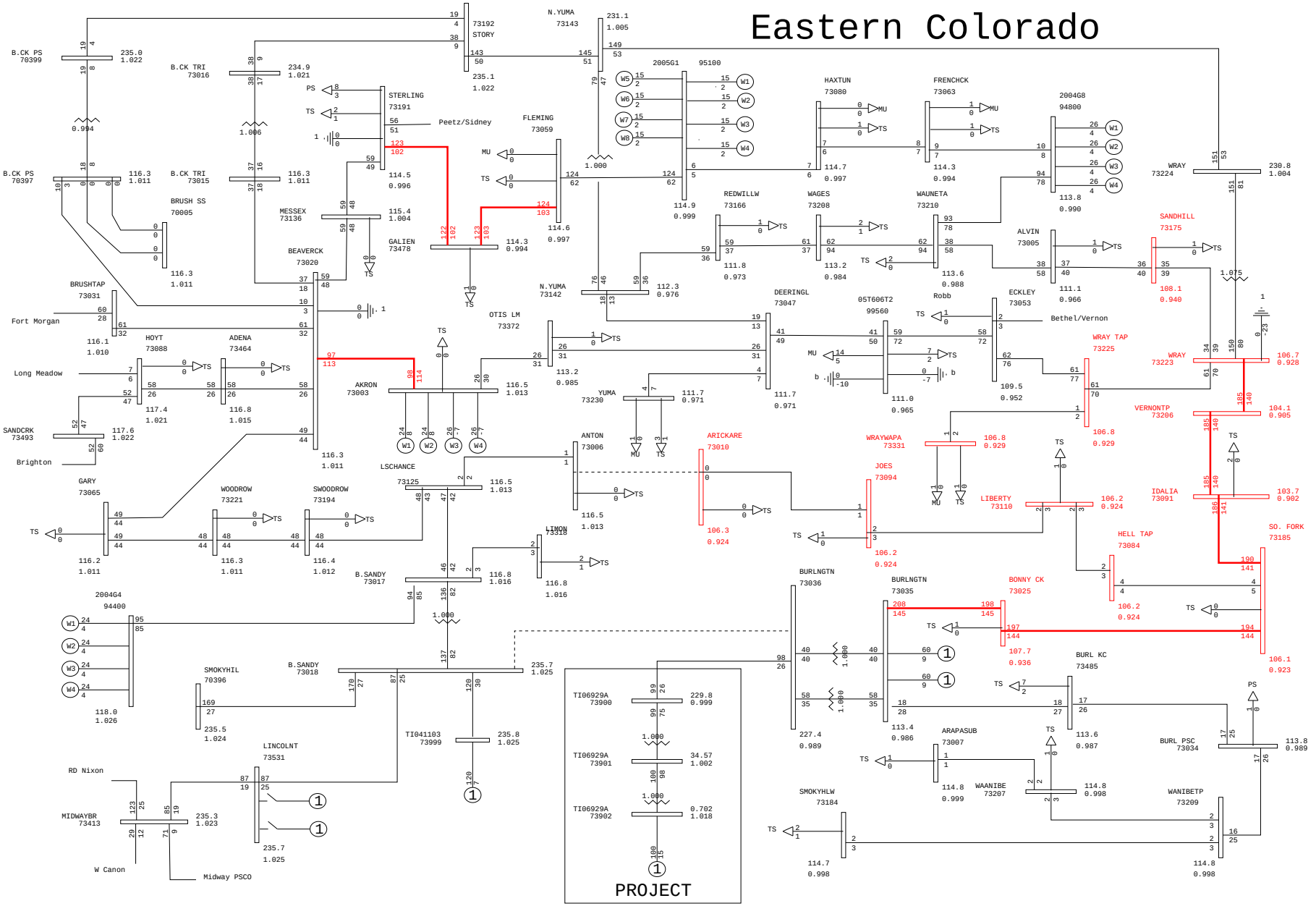

General Electric International, Inc. PSLF Program Sat Mar 24 09:08:37 2007 cases\lw\r4\cont\09lw-060929a-r4-pst-tsgt_bsy-brl230.sav

TRI-STATE Generation and Transmission Association Inc.	2009 Light Winter Revision 4 TI-060929A Post-Project Case to Tri-State 100 MW at Burlington delivered to Tri-State	Plot 015 - Eastern Colorado Big Sandy - Burlington 230 kV line outage	MVA/%rate draw\tri-state-ec.drw Rating = 2

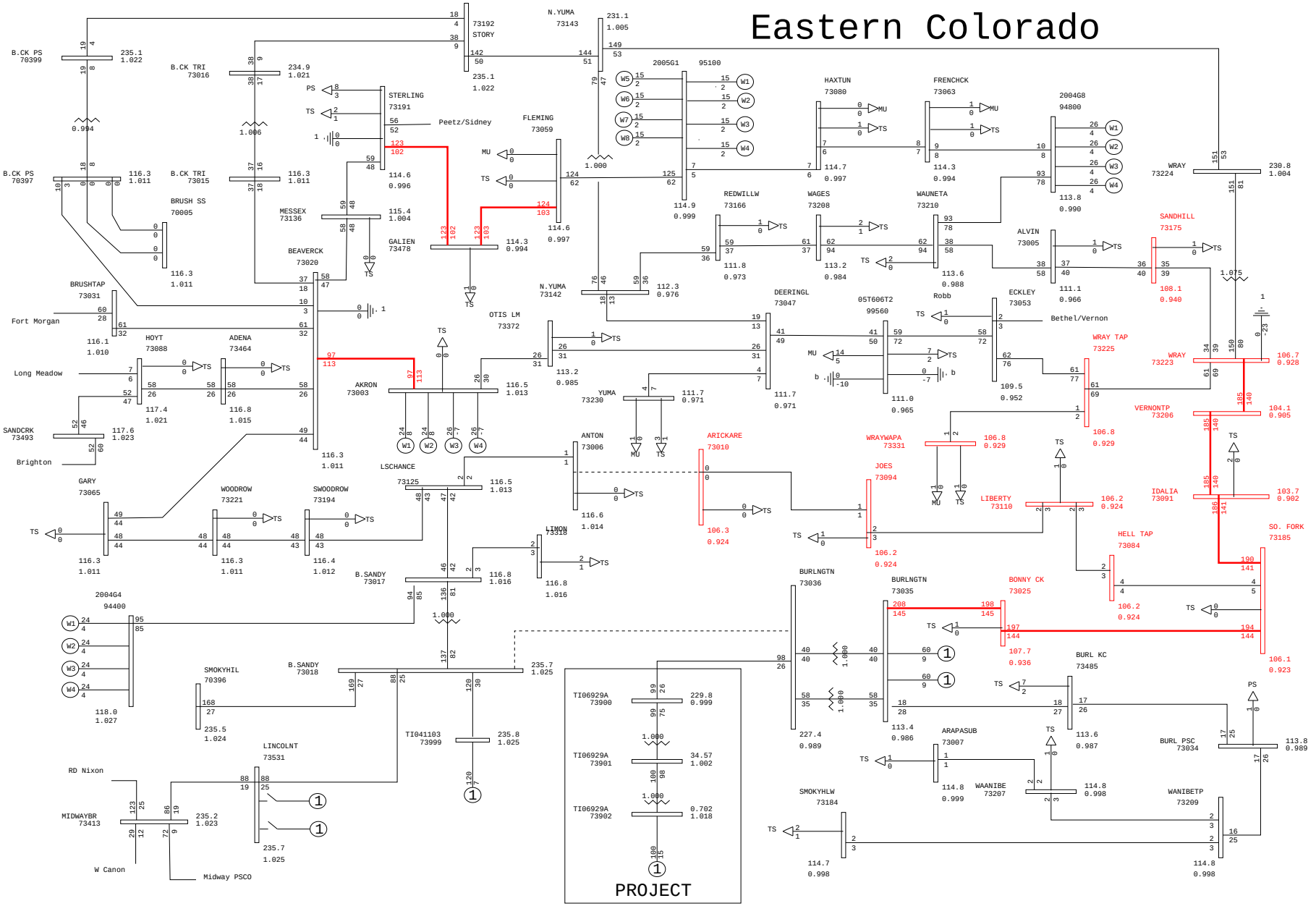

General Electric International, Inc. PSLF Program Sat Mar 24 09:08:38 2007 cases\lw\r4\cont\09lw-060929a-r4-pst-caer_bsy-brl230.sav

TRI-STATE Generation and Transmission Association Inc.	2009 Light Winter Revision 4 TI-060929A Post-Project Case to CA-ER 100 MW at Burlington delivered to Area 30 PG&E as Energy Resource	Plot 016 - Eastern Colorado Big Sandy - Burlington 230 kV line outage	MVA/%rate draw\tri-state-ec.drw Rating = 2

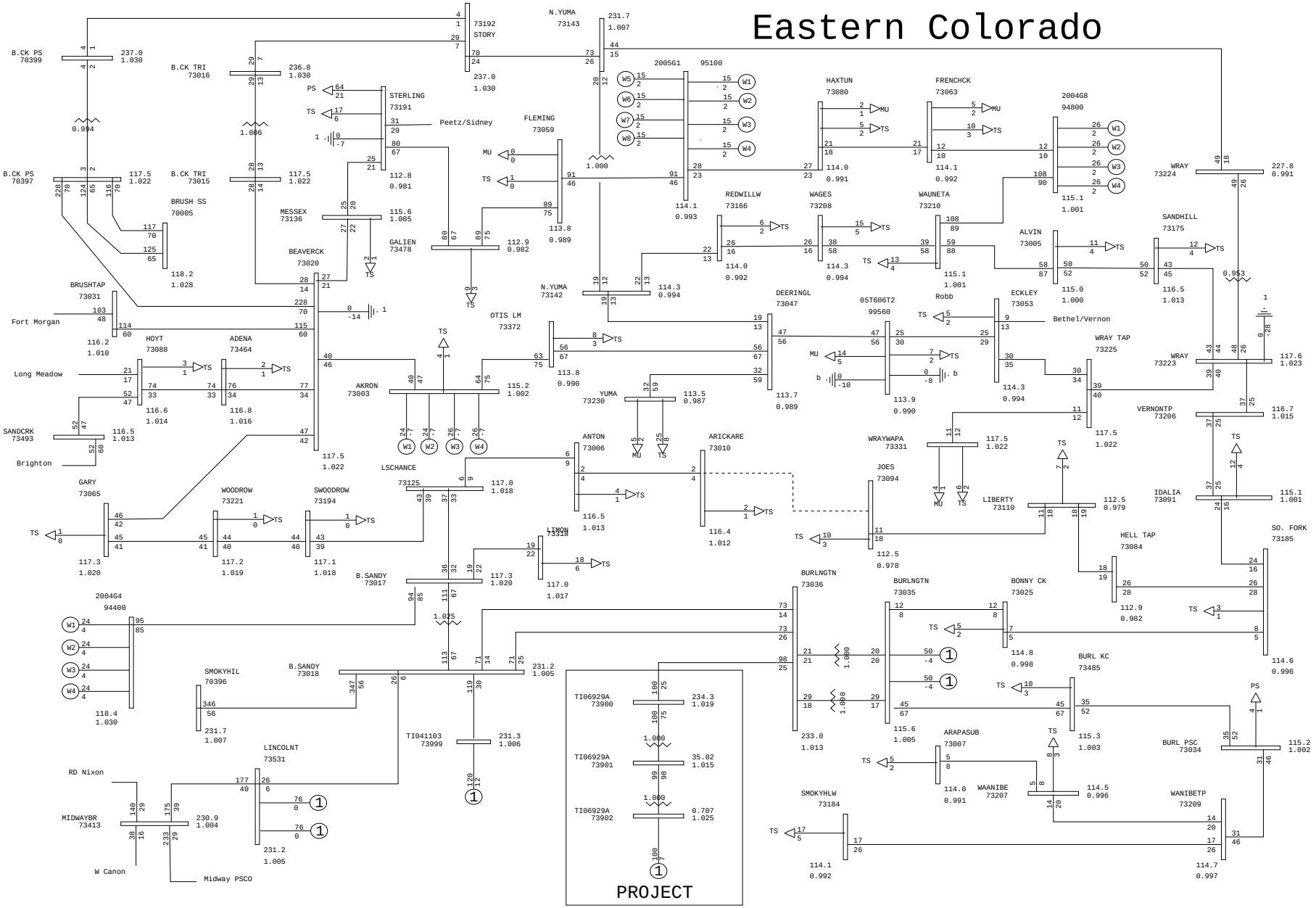

General Electric International, Inc. PSLF Program Sat Mar 24 09:08:39 2007 cases\hs\09hs-060929a-r4-pst-psco-m1.sav

TRI-STATE Generation and Transmission Association Inc.	2009 Heavy Summer Revision 4 TI-060929A Post-Project Case to PSCO 100 MW at Burlington delivered to Area 70 PSCO Xcel Energy Mitigation 1: BSandy-Brl 230 kV(510 MVA), upgrade BS-Lincoln 230 kV to 442 MVA	Plot 017 - Eastern Colorado Normal Conditions	MVA/%rate draw\tri-state-ec.drw Rating = 1

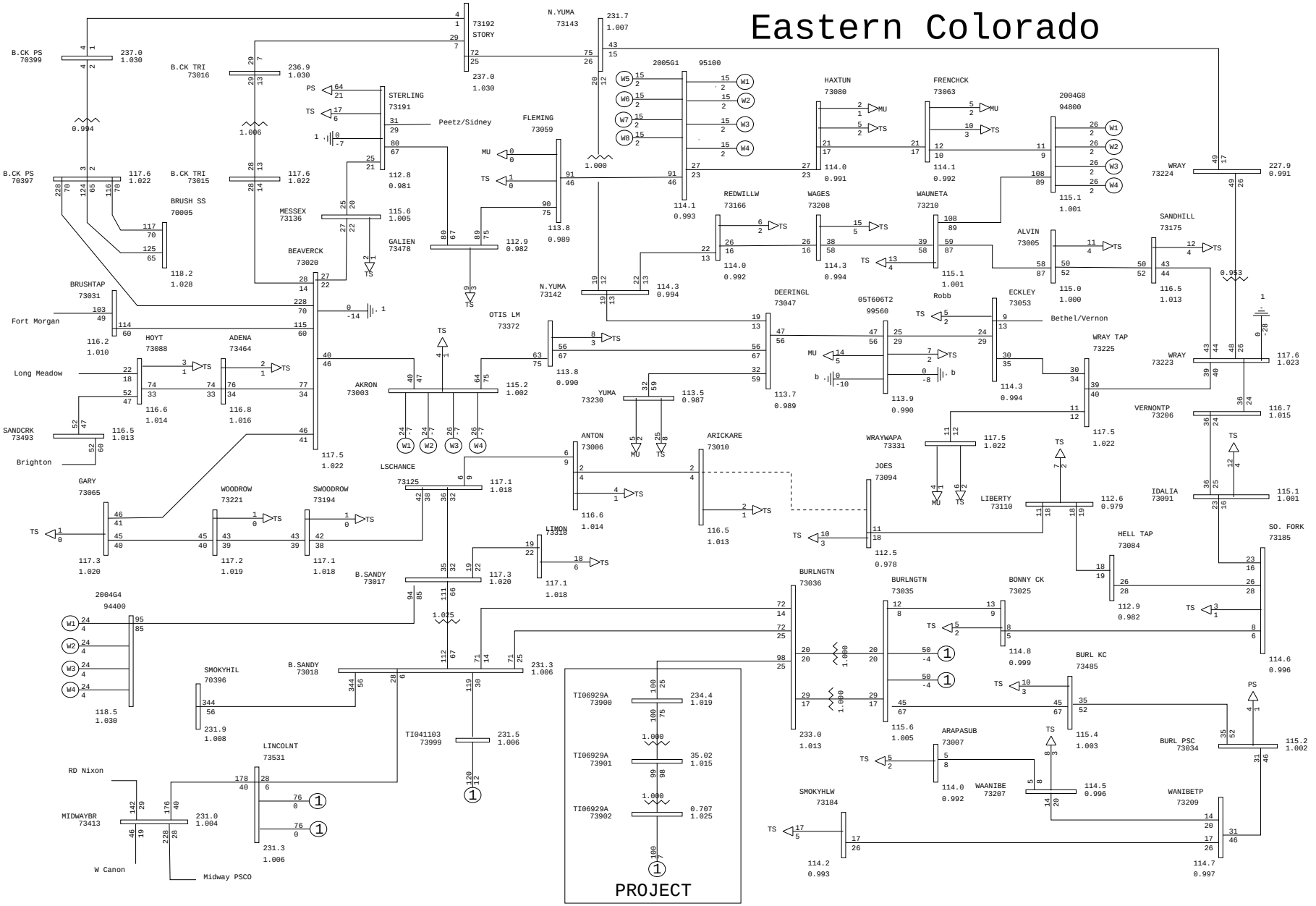

General Electric International, Inc. PSLF Program Sat Mar 24 09:08:40 2007 cases\hs\09hs-060929a-r4-pst-tsgt-m1.sav

TRI-STATE Generation and Transmission Association Inc.	2009 Heavy Summer Revision 4 TI-060929A Post-Project Case to Tri-State 100 MW at Burlington delivered to Tri-State Mitigation 1: BSandy-Brl 230 kV(510 MVA), upgrade BS-Lincoln 230 kV to 442 MVA	Plot 018 - Eastern Colorado Normal Conditions
		MVA/%rate draw\tri-state-ec.drw Rating = 1

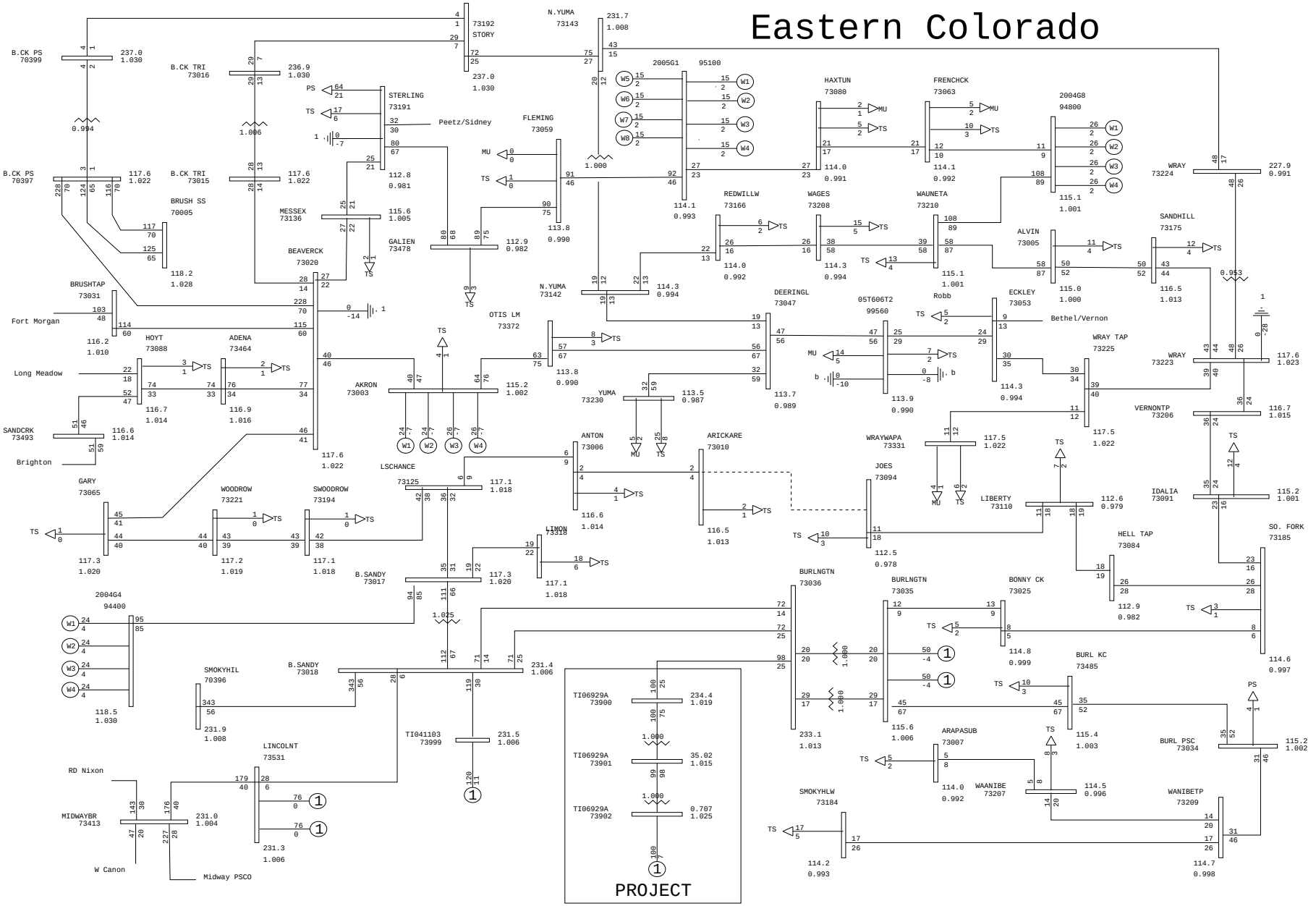

General Electric International, Inc. PSLF Program Sat Mar 24 09:08:41 2007 cases\hs\09hs-060929a-r4-pst-caer-m1.sav

TRI-STATE Generation and Transmission Association Inc.	2009 Heavy Summer Revision 4 TI-060929A Post-Project Case to CA-ER 100 MW at Burlington delivered to Area 30 PG&E as Energy Resource Mitigation 1: BSandy-Brl 230 kV(510 MVA), upgrade BS-Lincoln 230 kV to 442 MVA	Plot 019 - Eastern Colorado Normal Conditions
		MVA/%rate draw\tri-state-ec.drw Rating = 1

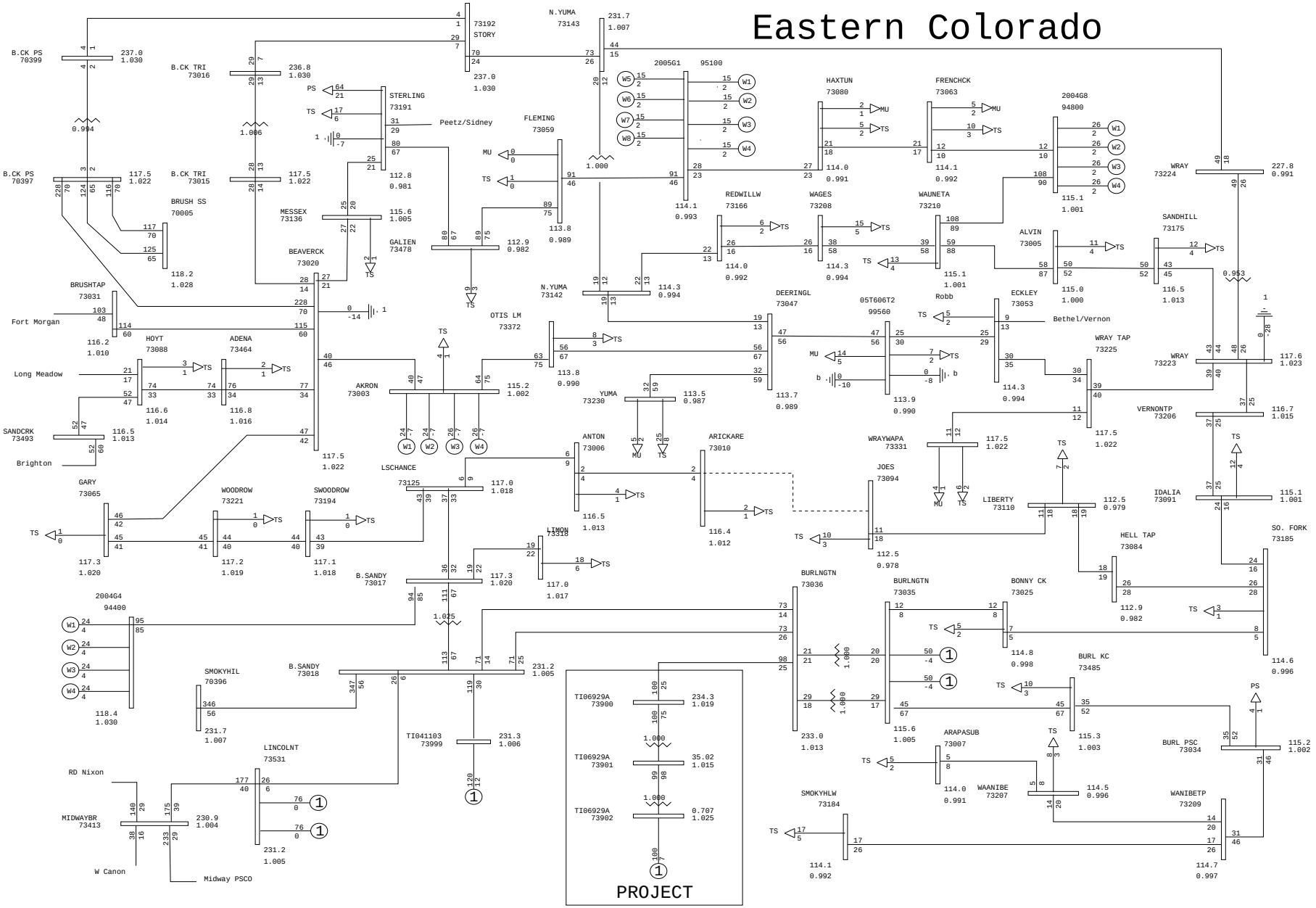

General Electric International, Inc. PSLF Program Sat Mar 24 09:08:41 2007 cases\hs\09hs-060929a-r4-pst-psco-m1.sav

TRI-STATE Generation and Transmission Association Inc.	2009 Heavy Summer Revision 4 TI-060929A Post-Project Case to PSCO 100 MW at Burlington delivered to Area 70 PSCO Xcel Energy Mitigation 1: BSandy-Brl 230 kV(510 MVA), upgrade BS-Lincoln 230 kV to 442 MVA	Plot 020 - Eastern Colorado Normal Conditions	MVA/%rate draw\tri-state-ec.drw Rating = 1

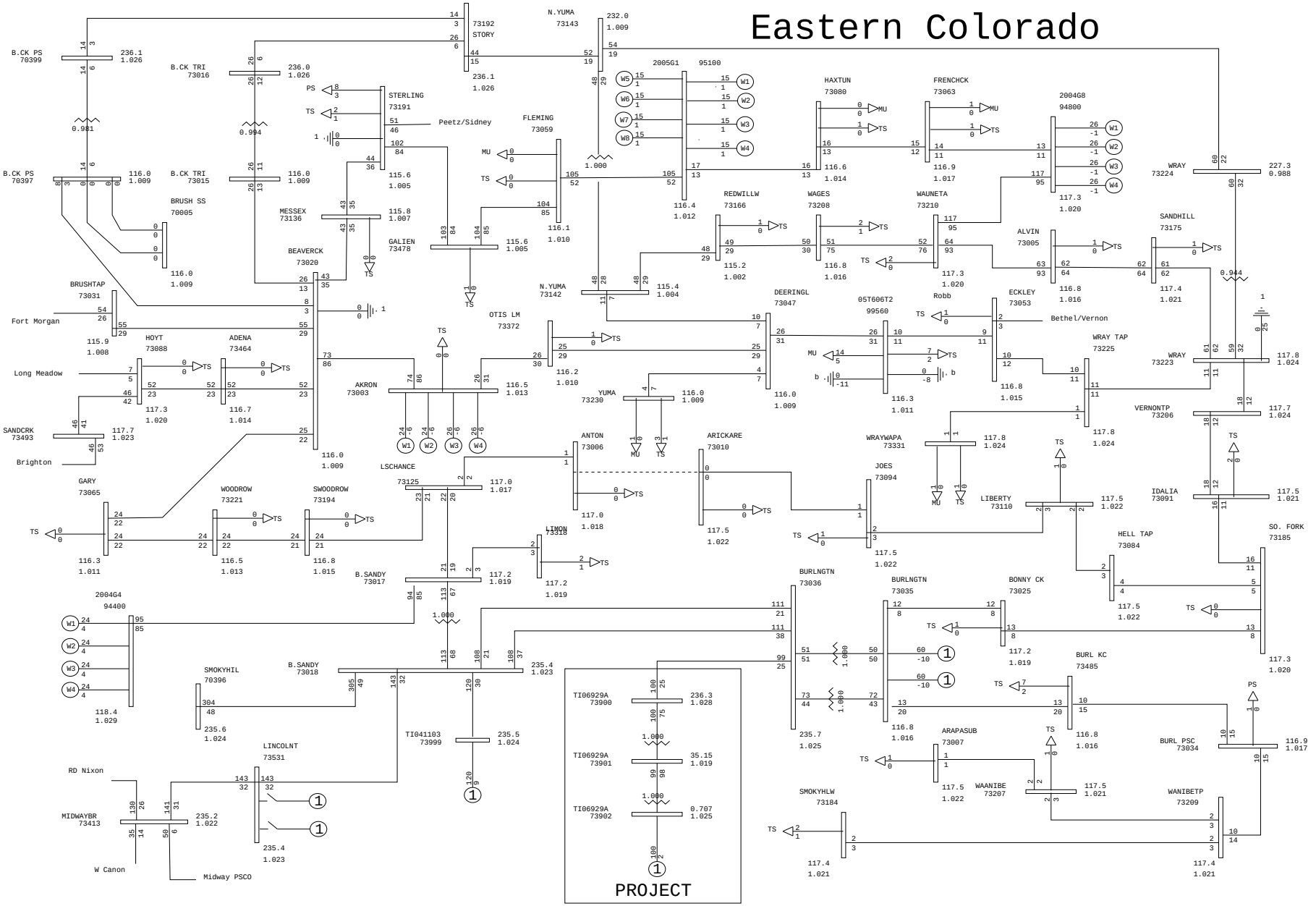

General Electric International, Inc. PSLF Program Sat Mar 24 09:08:42 2007 cases\lw\09lw-060929a-r4-pst-tsgt-m1.sav

TRI-STATE Generation and Transmission Association Inc.	2009 Light Winter Revision 4 TI-060929A Post-Project Case to Tri-State 100 MW at Burlington delivered to Tri-State Mitigation 1: BSandy-Brl 230 kV(510 MVA), upgrade BS-Lincoln 230 kV to 442 MVA	Plot 021 - Eastern Colorado Normal Conditions
		MVA/%rate draw\tri-state-ec.drw Rating = 1

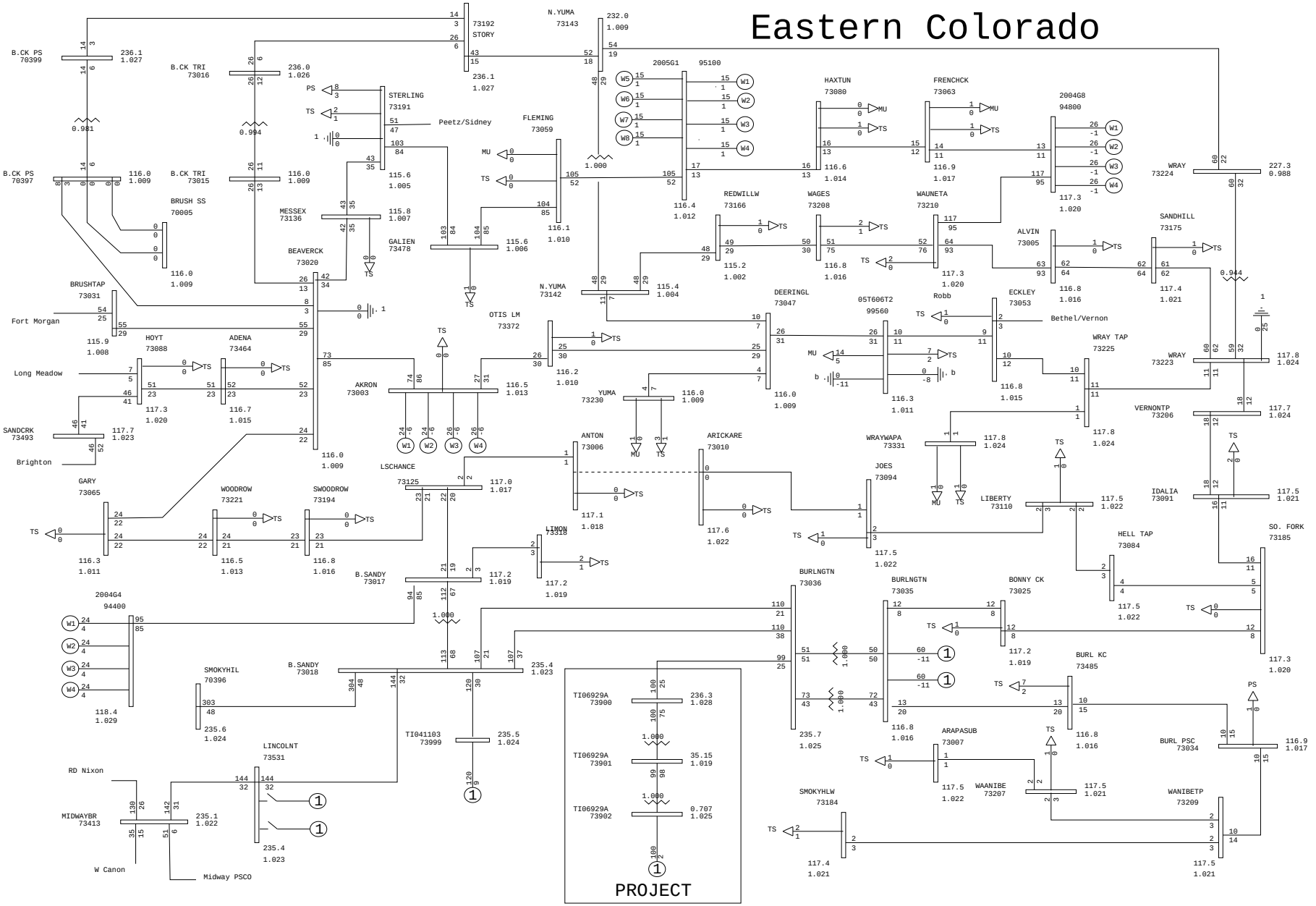

General Electric International, Inc. PSLF Program Sat Mar 24 09:08:43 2007 cases\lw\09lw-060929a-r4-pst-caer-m1.sav

TRI-STATE Generation and Transmission Association Inc.	2009 Light Winter Revision 4 TI-060929A Post-Project Case to CA-ER 100 MW at Burlington delivered to Area 30 PG&E as Energy Resource Mitigation 1: BSandy-Brl 230 kV(510 MVA), upgrade BS-Lincoln 230 kV to 442 MVA	Plot 022 - Eastern Colorado Normal Conditions
		MVA/%rate draw\tri-state-ec.drw Rating = 1

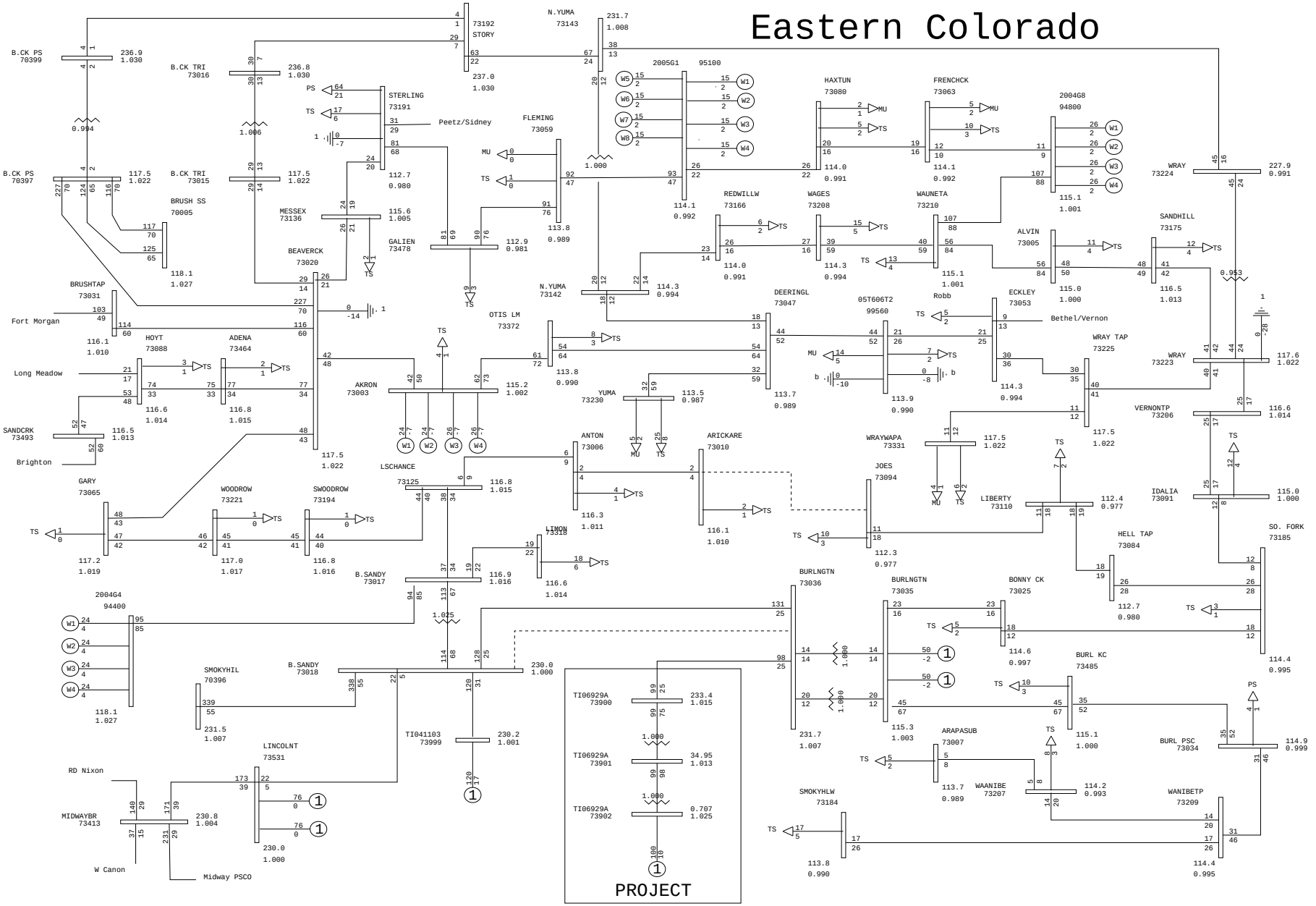

General Electric International, Inc. PSLF Program Sat Mar 24 09:08:45 2007 cases\hs\09hs-060929a-r4-pst-psco-m1.sav

TRI-STATE Generation and Transmission Association Inc.	2009 Heavy Summer Revision 4 TI-060929A Post-Project Case to PSCO 100 MW at Burlington delivered to Area 70 PSCO Xcel Energy Mitigation 1: BSandy-Brl 230 kV(510 MVA), upgrade BS-Lincoln 230 kV to 442 MVA	Plot 023 - Eastern Colorado Big Sandy - Burlington 230 kV line outage	MVA/%rate draw\tri-state-ec.drw Rating = 2

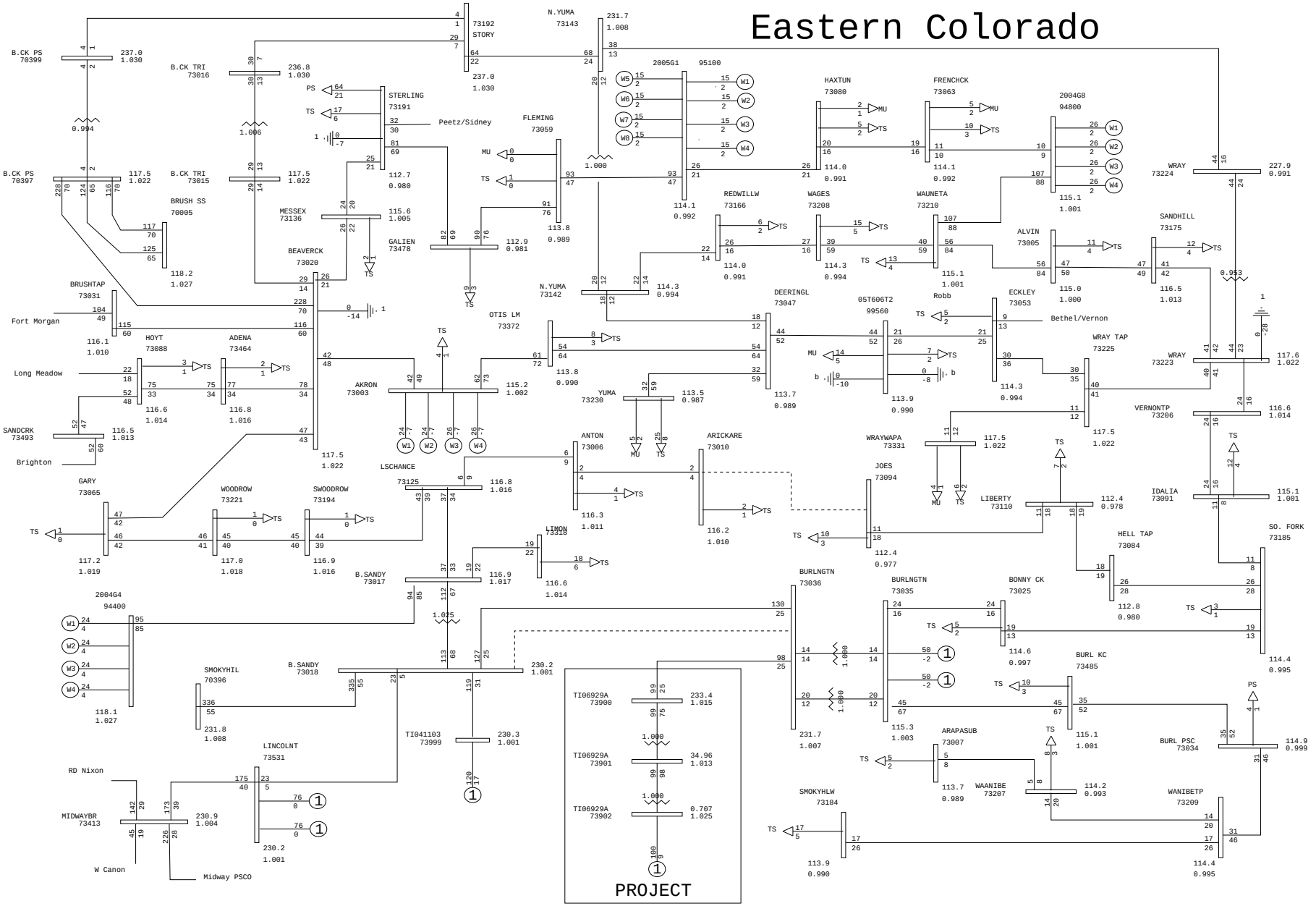

General Electric International, Inc. PSLF Program Sat Mar 24 09:08:48 2007 cases\hs\09hs-060929a-r4-pst-tsgt-m1.sav

TRI-STATE Generation and Transmission Association Inc.	2009 Heavy Summer Revision 4 TI-060929A Post-Project Case to Tri-State 100 MW at Burlington delivered to Tri-State Mitigation 1: BSandy-Brl 230 kV(510 MVA), upgrade BS-Lincoln 230 kV to 442 MVA	Plot 024 - Eastern Colorado Big Sandy - Burlington 230 kV line outage

MVA/%rate
draw\tri-state-ec.drw
Rating = 2

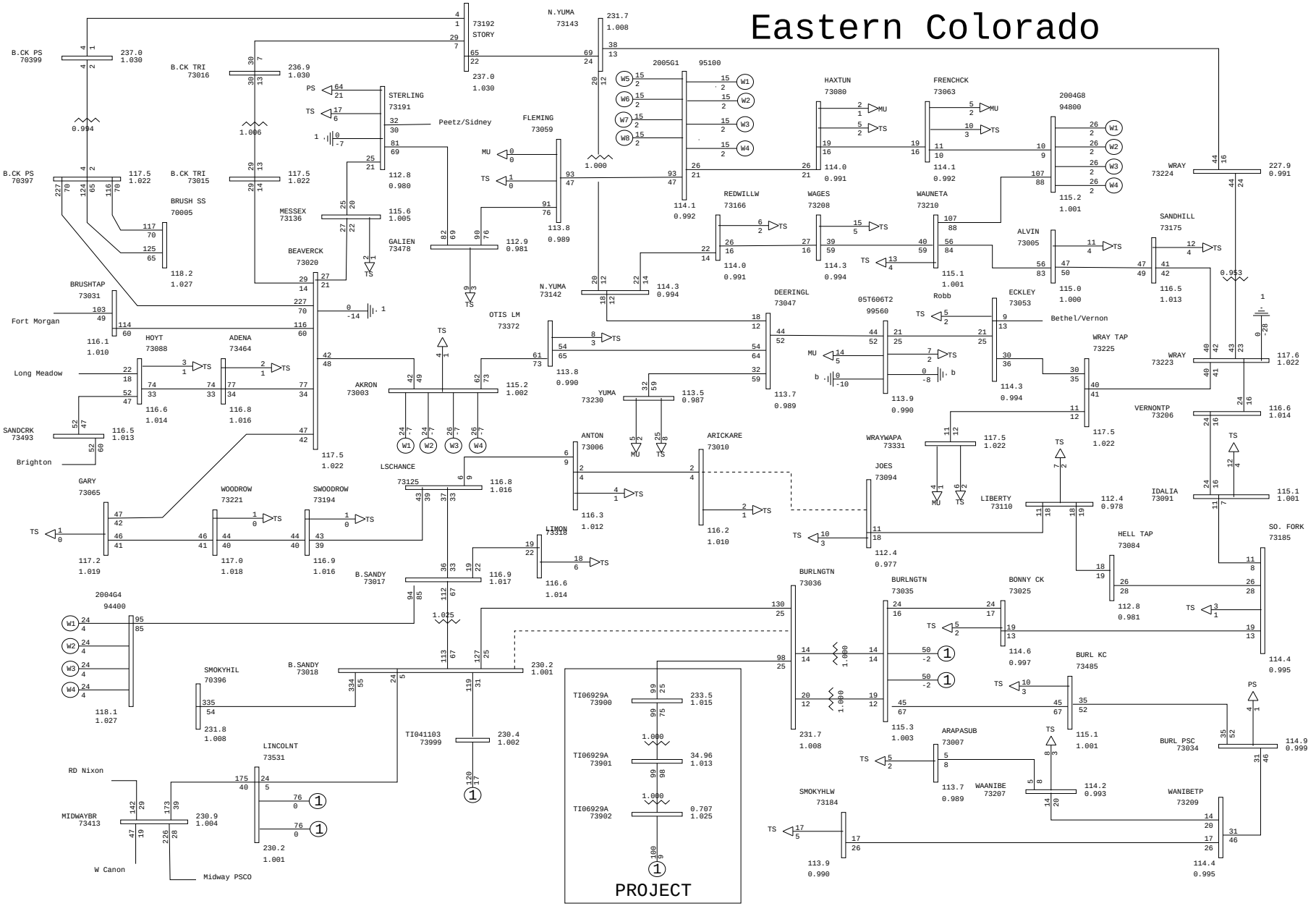

General Electric International, Inc. PSLF Program Sat Mar 24 09:08:50 2007 cases\hs\09hs-060929a-r4-pst-caer-m1.sav

TRI-STATE Generation and Transmission Association Inc.	2009 Heavy Summer Revision 4 TI-060929A Post-Project Case to CA-ER 100 MW at Burlington delivered to Area 30 PG&E as Energy Resource Mitigation 1: BSandy-Brl 230 kV(510 MVA), upgrade BS-Lincoln 230 kV to 442 MVA	Plot 025 - Eastern Colorado Big Sandy - Burlington 230 kV line outage	MVA/%rate draw\tri-state-ec.drw Rating = 2

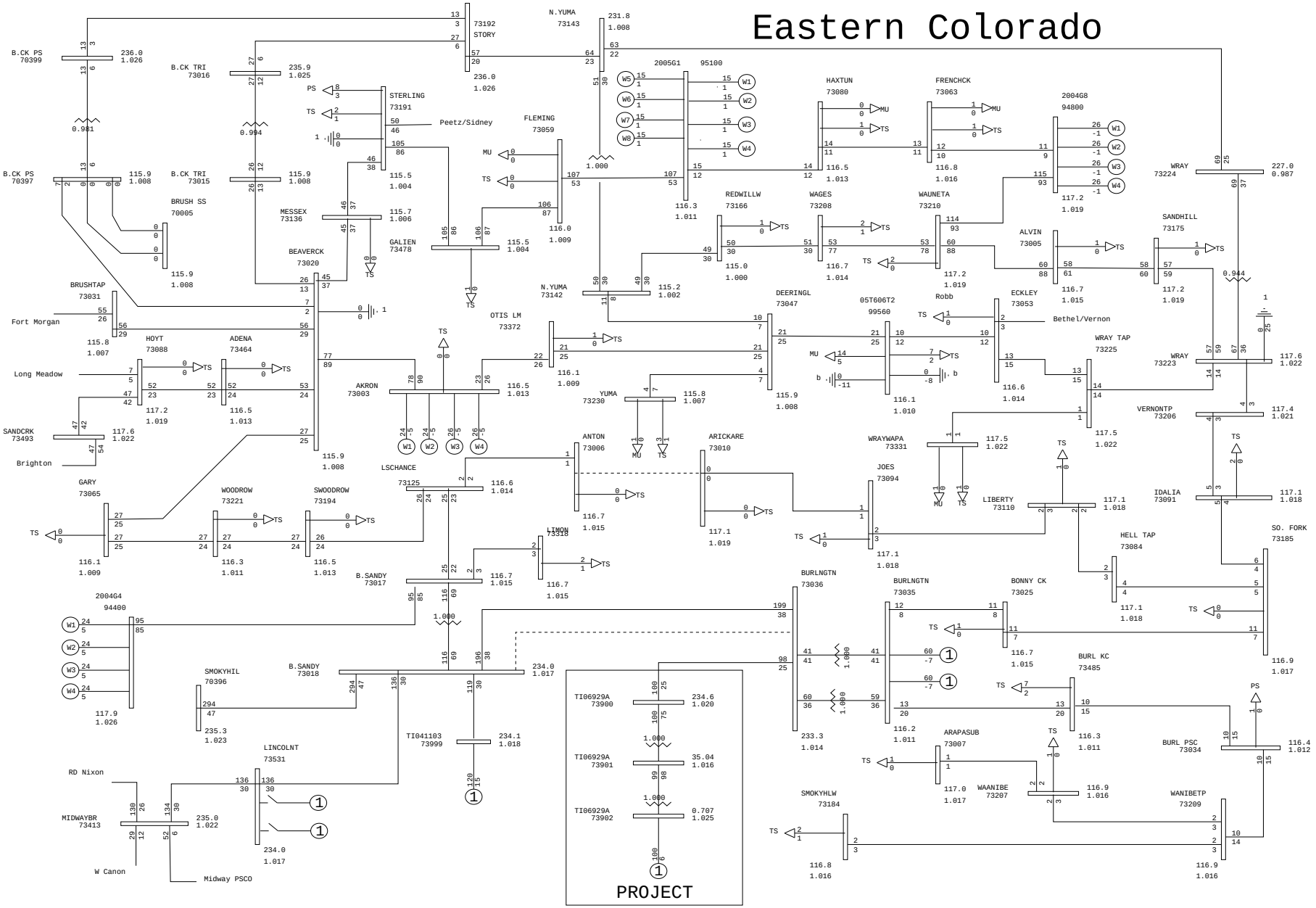

General Electric International, Inc. PSLF Program Sat Mar 24 09:08:52 2007 cases\lw\09lw-060929a-r4-pst-psco-m1.sav

TRI-STATE Generation and Transmission Association Inc.	2009 Light Winter Revision 4 TI-060929A Post-Project Case to PSCO 100 MW at Burlington delivered to Area 70 PSCO Xcel Energy Mitigation 1: BSandy-Brl 230 kV(510 MVA), upgrade BS-Lincoln 230 kV to 442 MVA	Plot 026 - Eastern Colorado Big Sandy - Burlington 230 kV line outage	MVA/%rate draw\tri-state-ec.drw Rating = 2

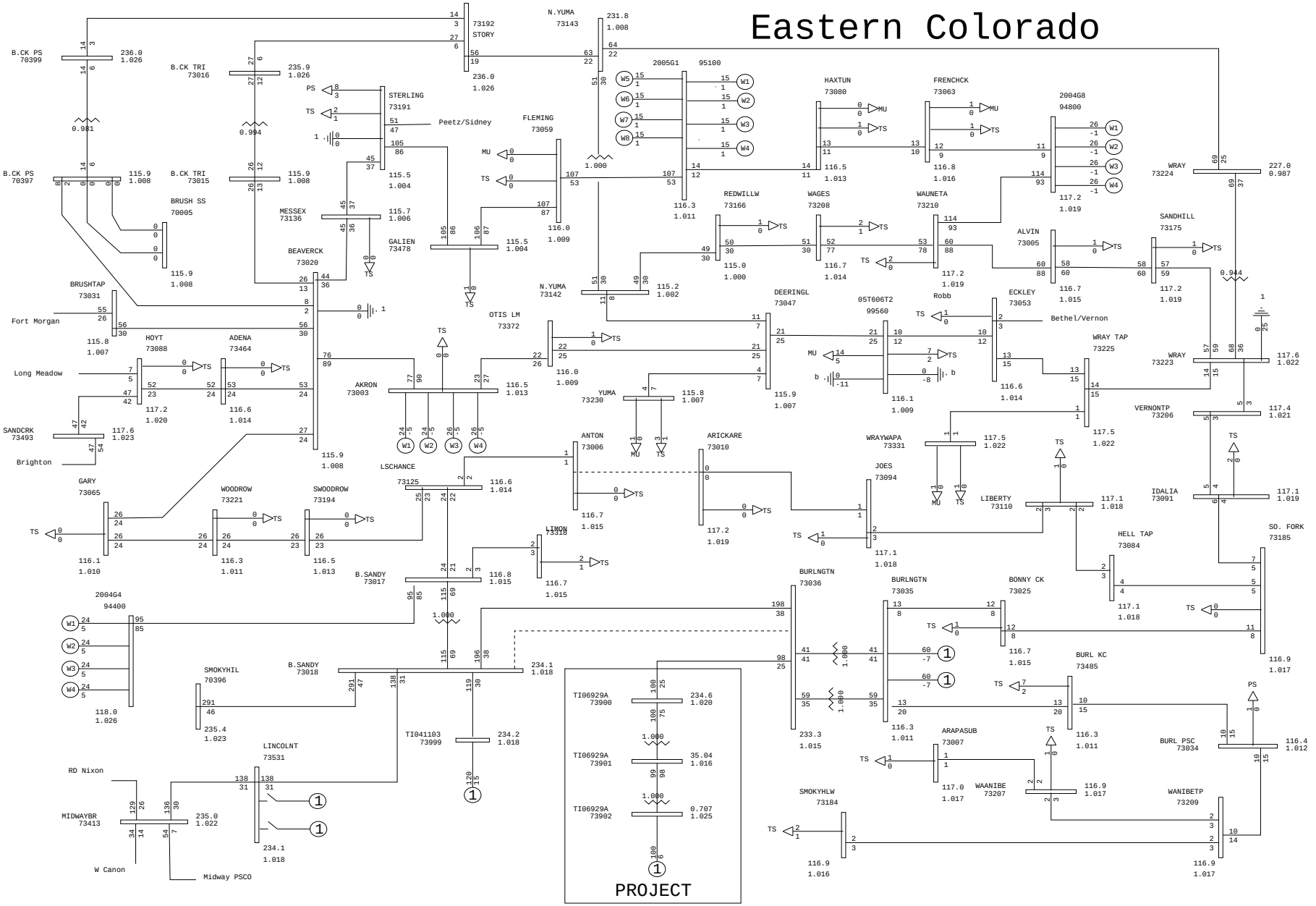

General Electric International, Inc. PSLF Program Sat Mar 24 09:08:54 2007 cases\lw\09lw-060929a-r4-pst-tsgt-m1.sav

TRI-STATE Generation and Transmission Association Inc.	2009 Light Winter Revision 4 TI-060929A Post-Project Case to Tri-State 100 MW at Burlington delivered to Tri-State Mitigation 1: BSandy-Brl 230 kV(510 MVA), upgrade BS-Lincoln 230 kV to 442 MVA	Plot 027 - Eastern Colorado Big Sandy - Burlington 230 kV line outage	MVA/%rate draw\tri-state-ec.drw Rating = 2

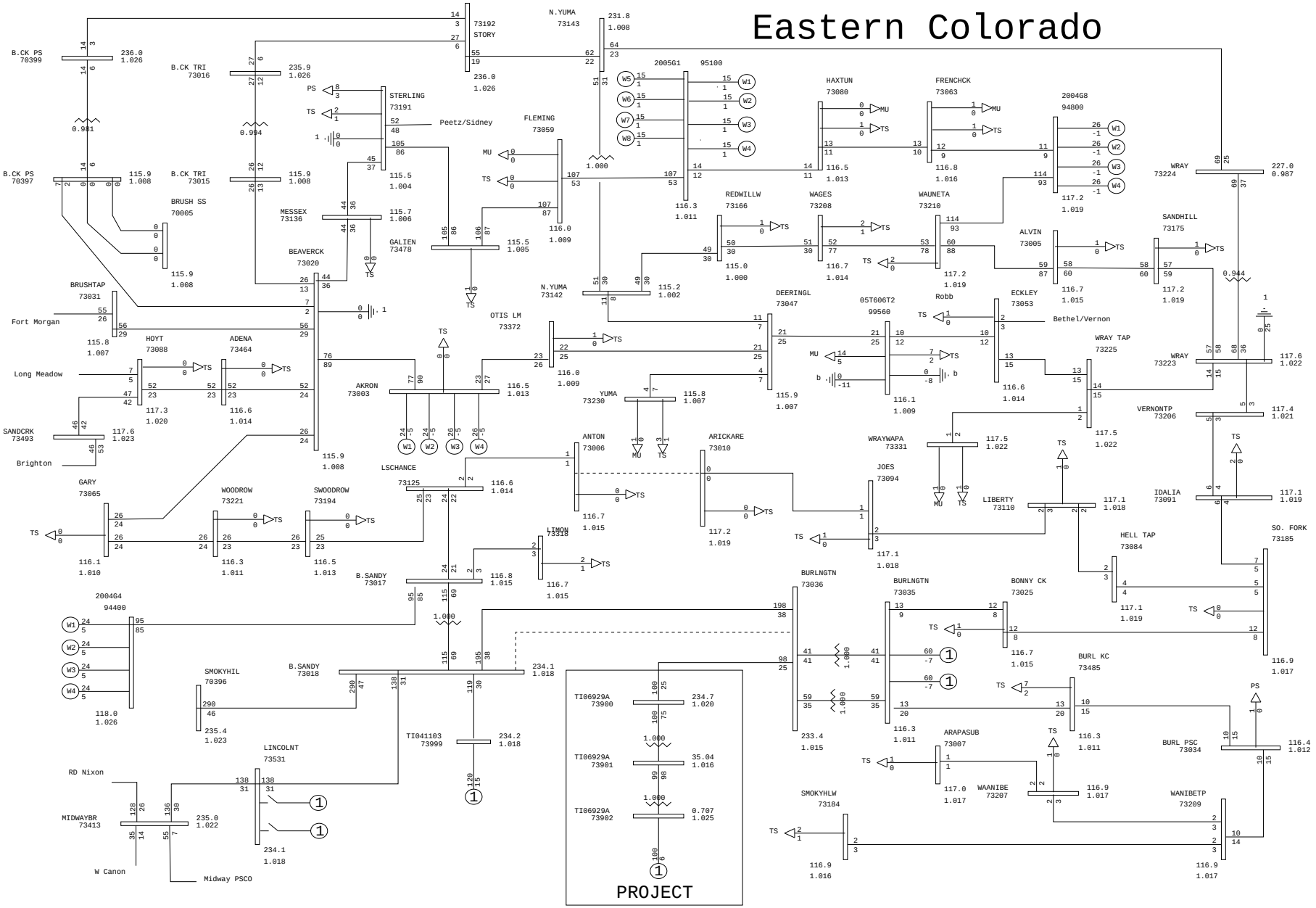

General Electric International, Inc. PSLF Program Sat Mar 24 09:08:56 2007 cases\lw\09lw-060929a-r4-pst-caer-m1.sav

TRI-STATE Generation and Transmission Association Inc.	2009 Light Winter Revision 4 TI-060929A Post-Project Case to CA-ER 100 MW at Burlington delivered to Area 30 PG&E as Energy Resource Mitigation 1: BSandy-Brl 230 kV(510 MVA), upgrade BS-Lincoln 230 kV to 442 MVA	Plot 028 - Eastern Colorado Big Sandy - Burlington 230 kV line outage
		MVA/%rate draw\tri-state-ec.drw Rating = 2

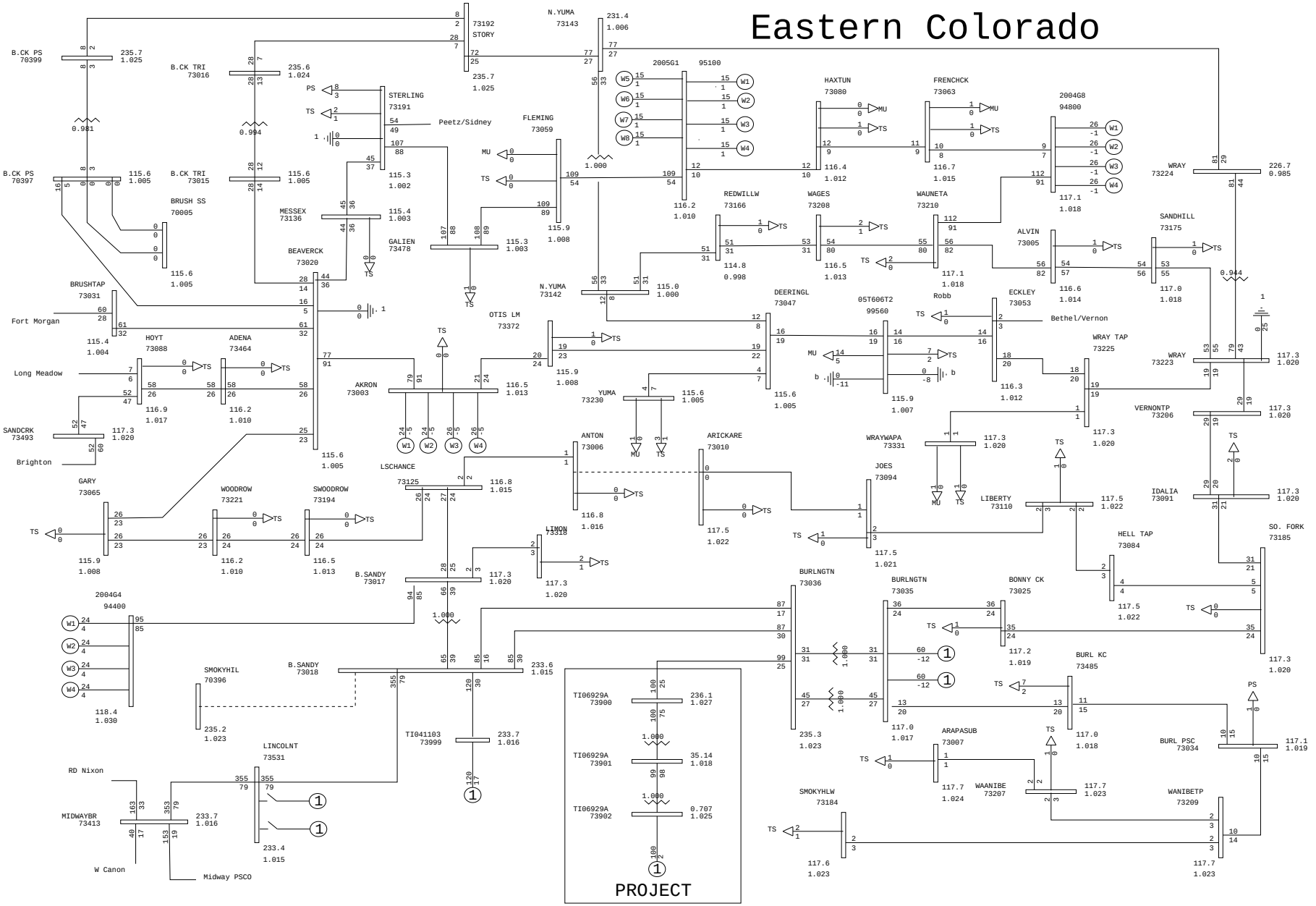

General Electric International, Inc. PSLF Program Sat Mar 24 09:08:59 2007 cases\lw\09lw-060929a-r4-pst-psco-m1.sav

TRI-STATE Generation and Transmission Association Inc.	2009 Light Winter Revision 4 TI-060929A Post-Project Case to PSCO 100 MW at Burlington delivered to Area 70 PSCO Xcel Energy Mitigation 1: BSandy-Brl 230 kV(510 MVA), upgrade BS-Lincoln 230 kV to 442 MVA	Plot 029 - Eastern Colorado Big Sandy - Smoky Hill 230 kV line outage	MVA/%rate draw\tri-state-ec.drw Rating = 2

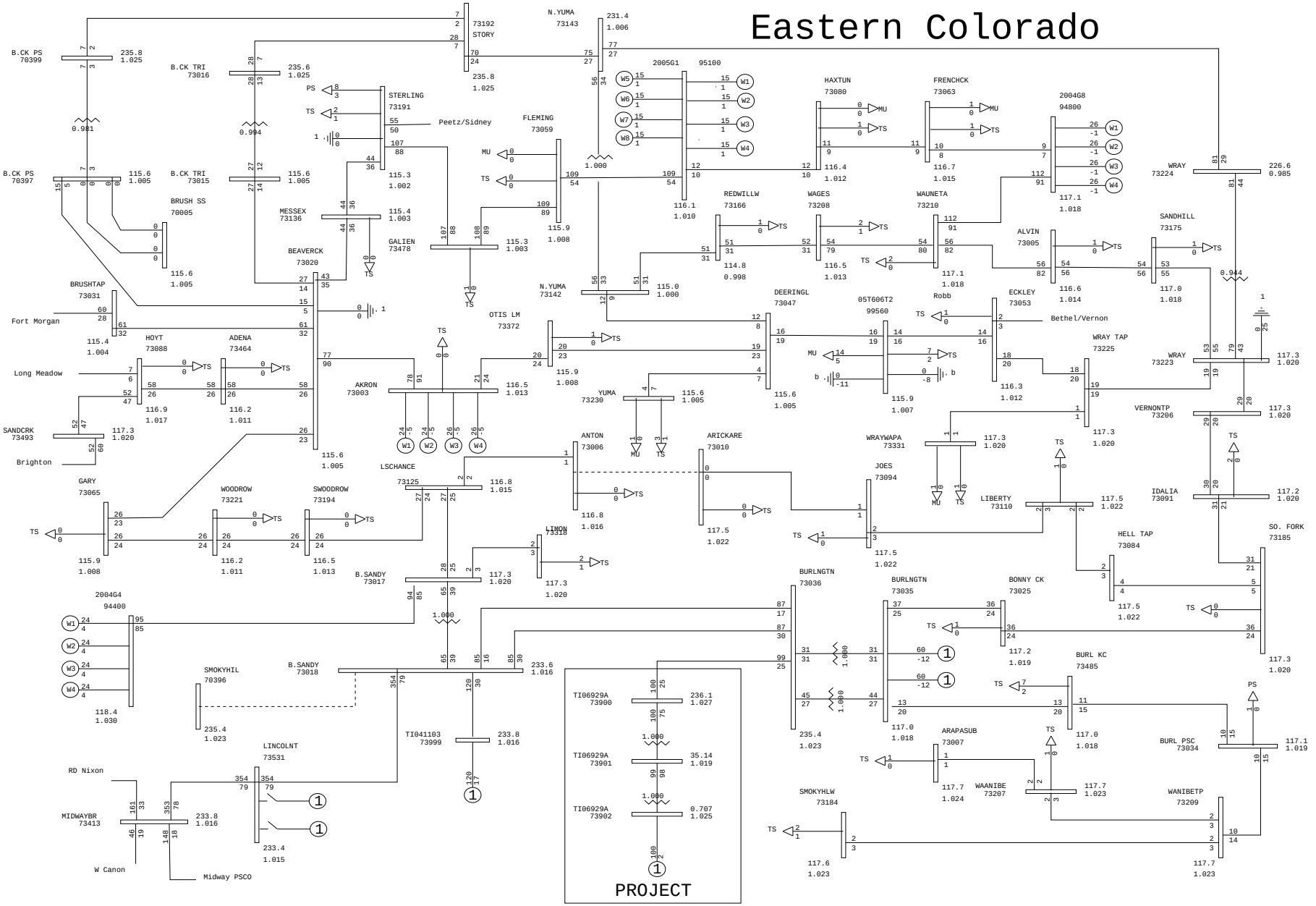

General Electric International, Inc. PSLF Program Sat Mar 24 09:09:01 2007 cases\lw\09lw-060929a-r4-pst-tsgt-m1.sav

TRI-STATE Generation and Transmission Association Inc.	2009 Light Winter Revision 4 TI-060929A Post-Project Case to Tri-State 100 MW at Burlington delivered to Tri-State Mitigation 1: BSandy-Brl 230 kV(510 MVA), upgrade BS-Lincoln 230 kV to 442 MVA	Plot 030 - Eastern Colorado Big Sandy - Smoky Hill 230 kV line outage
		MVA/%rate draw\tri-state-ec.drw Rating = 2

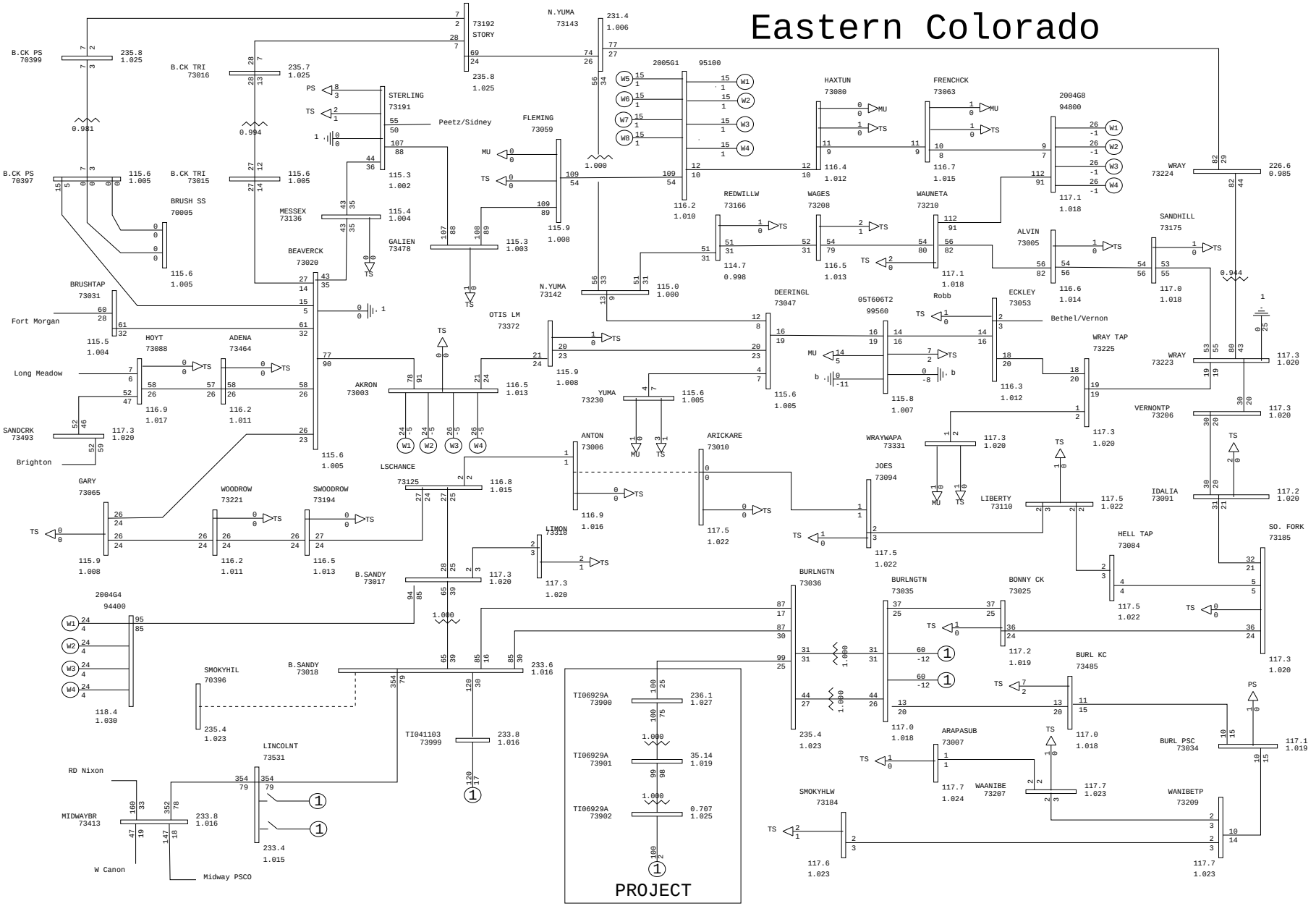

General Electric International, Inc. PSLF Program Sat Mar 24 09:09:03 2007 cases\lw\09lw-060929a-r4-pst-caer-m1.sav

TRI-STATE Generation and Transmission Association Inc.	2009 Light Winter Revision 4 TI-060929A Post-Project Case to CA-ER 100 MW at Burlington delivered to Area 30 PG&E as Energy Resource Mitigation 1: BSandy-Brl 230 kV(510 MVA), upgrade BS-Lincoln 230 kV to 442 MVA	Plot 031 - Eastern Colorado Big Sandy - Smoky Hill 230 kV line outage	MVA/%rate draw\tri-state-ec.drw Rating = 2