UNITED STATES
DEPARTMENT OF ENERGY
WESTERN AREA POWER ADMINISTRATION
OPEN ACCESS TRANSMISSION SERVICE TARIFF

UNITED STATES
DEPARTMENT OF ENERGY
WESTERN AREA POWER ADMINISTRATION
OPEN ACCESS TRANSMISSION SERVICE TARIFF

PART I. COMMON SERVICE PROVISIONS 1
1 Definitions 1
1.1 Affiliate 1
1.2 Ancillary Services 1
1.3 Annual Transmission Costs 1
1.4 Application 1
1.5 Clustering 1
1.6 Commission 1
1.7 Completed Application 1
1.8 Control Area 1
1.9 Curtailment 2
1.10 Delivering Party 2
1.11 Designated Agent 2
1.12 Direct Assignment Facilities 2
1.13 Eligible Customer 2
1.14 Facilities Study 2
1.15 Firm Point-To-Point Transmission Service 3
1.16 Good Utility Practice 3
1.17 Interruption 3
1.18 Load Ratio Share 3
1.19 Load Shedding 3
1.20 Long-Term Firm Point-To-Point Transmission Service 3
1.21 Native Load Customers 3
1.22 Network Customer 3
1.23 Network Integration Transmission Service 4
1.24 Network Load 4
1.25 Network Operating Agreement 4
1.26 Network Operating Committee 4
1.27 Network Resource 4
1.28 Network Upgrades 4
1.29 New Rate 4
1.30 Non-Firm Point-To-Point Transmission Service 4
1.31 Non-Firm Sale 5
1.32 Open Access Same-Time Information System (OASIS) 5
1.33 Part I: Tariff Definitions and Common Service Provisions contained in Sections 2 through 12 5
1.34 Part II: Tariff Sections 13 through 27 5
1.35 Part III: Tariff Sections 28 through 35 5
1.36 Parties 5
1.37 Point(s) of Delivery 5

1.38 Point(s) of Receipt 5
1.39 Point-To-Point Transmission Service 6
1.40 Power Purchaser 6
1.41 Pre-Confirmed Application 6
1.42 Rate 6
1.43 Rate Adjustment 6
1.44 Rate Formula Adjustment 6
1.45 Reasonable Efforts 6
1.46 Receiving Party 6
1.47 Regional Transmission Group (RTG) 6
1.48 Reserved Capacity 6
1.49 Service Agreement 7
1.50 Service Commencement Date 7
1.51 Short-Term Firm Point-To-Point Transmission Service 7
1.52 System Condition 7
1.53 System Impact Study 7
1.54 Third-Party Sale 7
1.55 Transmission Customer 7
1.56 Transmission Provider 7
1.57 Transmission Provider's Monthly Transmission System Peak 8
1.58 Transmission Service 8
1.59 Transmission System 8
2 Initial Allocation and Renewal Procedures 8
2.1 Initial Allocation of Available Transfer Capability 8
2.2 Reservation Priority For Existing Firm Service Customers 8
3 Ancillary Services 9
3.1 Scheduling, System Control and Dispatch Service 10
3.2 Reactive Supply and Voltage Control from Generation or Other Sources Service 10
3.3 Regulation and Frequency Response Service 10
3.4 Energy Imbalance Service 10
3.5 Operating Reserve - Spinning Reserve Service 11
3.6 Operating Reserve - Supplemental Reserve Service 11
3.7 Generator Imbalance Service 11
4 Open Access Same-Time Information System (OASIS) 11
4.1 Terms and conditions 11
4.2 The North American Energy Standards Board 11
4.3 The Transmission Provider shall post on OASIS 11
5 Local Furnishing Bonds 11
5.1 Transmission Providers That Own Facilities Financed by Local Furnishing Bonds 11
5.2 Alternative Procedures for Requesting Transmission Service 12
6 Reciprocity 12
7 Billing and Payment 13
7.1 Billing Procedures 13

7.2 Unpaid Balances 13
7.3 Customer Default 14
8 Accounting for the Transmission Provider's Use of the Tariff 14
8.1 Transmission Revenues 14
8.2 Study Costs and Revenues 14
9 Regulatory Filings 15
10 Force Majeure and Indemnification 15
10.1 Force Majeure 15
10.2 Indemnification 15
11 Creditworthiness 15
12 Dispute Resolution Procedures 16
12.1 Internal Dispute Resolution Procedures 16
12.2 External Dispute Resolution Procedures 16
12.3 Rights Under The Federal Power Act 16
PART II. POINT-TO-POINT TRANSMISSION SERVICE 16
13 Nature of Firm Point-To-Point Transmission Service 16
13.1 Term 16
13.2 Reservation Priority 17
13.3 Use of Firm Transmission Service by the Transmission Provider 18
13.4 Service Agreements 18
13.5 Transmission Customer Obligations for Facility Additions or Redispatch Costs 19
13.6 Curtailment of Firm Transmission Service 19
13.7 Classification of Firm Transmission Service 20
13.8 Scheduling of Firm Point-To-Point Transmission Service 21
14 Nature of Non-Firm Point-To-Point Transmission Service 21
14.1 Term 21
14.2 Reservation Priority 21
14.3 Use of Non-Firm Point-To-Point Transmission Service by the Transmission Provider 22
14.4 Service Agreements 22
14.5 Classification of Non-Firm Point-To-Point Transmission Service 22
14.6 Scheduling of Non-Firm Point-To-Point Transmission Service 23
14.7 Curtailment or Interruption of Service 23
15 Service Availability 24
15.1 General Conditions 24
15.2 Determination of Available Transfer Capability 24
15.3 Initiating Service in the Absence of an Executed Service Agreement 24
15.4 Obligation to Provide Transmission Service that Requires Expansion or Modification of the Transmission System, Redispatch or Conditional Curtailment 25
15.5 Deferral of Service 26
15.6 Other Transmission Service Schedules 26
15.7 Real Power Losses 26

16 Transmission Customer Responsibilities 26
16.1 Conditions Required of Transmission Customers 26
16.2 Transmission Customer Responsibility for Third-Party Arrangements 27
17 Procedures for Arranging Firm Point-To-Point Transmission Service 27
17.1 Application 27
17.2 Completed Application 28
17.3 Deposit and Processing Fee 29
17.4 Notice of Deficient Application 29
17.5 Response to a Completed Application 30
17.6 Execution of a Service Agreement 30
17.7 Extensions for Commencement of Service 30
18 Procedures for Arranging Non-Firm Point-To-Point Transmission Service 31
18.1 Application 31
18.2 Completed Application 31
18.3 Reservation of Non-Firm Point-To-Point Transmission Service 32
18.4 Determination of Available Transfer Capability 32
19 Additional Study Procedures For Firm Point-To-Point Transmission Service Requests 32
19.1 Notice of Need for System Impact Study 32
19.2 Clustering of System Impact Studies 33
19.3 System Impact Study Agreement and Compensation 34
19.4 System Impact Study Procedures 34
19.5 Facilities Study Procedures 35
19.6 Facilities Study Modifications 36
19.7 Due Diligence in Completing New Facilities 36
19.8 Partial Interim Service 36
19.9 Expedited Procedures for New Facilities 36
19.10 Study Metrics 37
19.11 Notice of Need for Environmental Review 37
20 Procedures if The Transmission Provider is Unable to Complete New Transmission Facilities for Firm Point-To-Point Transmission Service 38
20.1 Delays in Construction of New Facilities 38
20.2 Alternatives to the Original Facility Additions 38
20.3 Refund Obligation for Unfinished Facility Additions 38
21 Provisions Relating to Transmission Construction and Services on the Systems of Other Utilities 39
21.1 Responsibility for Third-Party System Additions 39
21.2 Coordination of Third-Party System Additions 39
22 Changes in Service Specifications 39
22.1 Modifications On a Non-Firm Basis 39
22.2 Modifications On a Firm Basis 40
23 Sale or Assignment of Transmission Service 40
23.1 Procedures for Assignment or Transfer of Service 40
23.2 Limitations on Assignment or Transfer of Service 41
23.3 Information on Assignment or Transfer of Service 41

24 Metering and Power Factor Correction at Receipt and Delivery Point(s) 41
24.1 Transmission Customer Obligations 41
24.2 Transmission Provider Access to Metering Data 41
24.3 Power Factor 41
25 Compensation for Transmission Service 42
26 Stranded Cost Recovery 42
27 Compensation for New Facilities and Redispatch Costs 42
PART III. NETWORK INTEGRATION TRANSMISSION SERVICE 42
28 Nature of Network Integration Transmission Service 42
28.1 Scope of Service 42
28.2 Transmission Provider Responsibilities 43
28.3 Network Integration Transmission Service 43
28.4 Secondary Service 43
28.5 Real Power Losses 43
28.6 Restrictions on Use of Service 44
29 Initiating Service 44
29.1 Condition Precedent for Receiving Service 44
29.2 Application Procedures 45
29.3 Technical Arrangements to be Completed Prior to Commencement of Service .. 48
29.4 Network Customer Facilities 48
29.5 This section is intentionally left blank 48
30 Network Resources 48
30.1 Designation of Network Resources 48
30.2 Designation of New Network Resources 49
30.3 Termination of Network Resources 49
30.4 Operation of Network Resources 50
30.5 Network Customer Redispatch Obligation 50
30.6 Transmission Arrangements for Network Resources Not Physically Interconnected With The Transmission Provider 51
30.7 Limitation on Designation of Network Resources 51
30.8 Use of Interface Capacity by the Network Customer 51
30.9 Network Customer Owned Transmission Facilities 51
31 Designation of Network Load 52
31.1 Network Load 52
31.2 New Network Loads Connected With the Transmission Provider 52
31.3 Network Load Not Physically Interconnected with the Transmission Provider ... 52
31.4 New Interconnection Points 52
31.5 Changes in Service Requests 52
31.6 Annual Load and Resource Information Updates 53
32 Additional Study Procedures For Network Integration Transmission Service Requests.. 53
32.1 Notice of Need for System Impact Study 53
32.2 System Impact Study Agreement and Compensation 54
32.3 System Impact Study Procedures 54
32.4 Facilities Study Procedures 55
32.5 Study Metrics 56

32.6 Notice of Need for Environmental Review ... 56
33 Load Shedding and Curtailments ... 56
33.1 Procedures ... 56
33.2 Transmission Constraints ... 57
33.3 Cost Responsibility for Relieving Transmission Constraints ... 57
33.4 Curtailments of Scheduled Deliveries ... 57
33.5 Allocation of Curtailments ... 57
33.6 Load Shedding ... 57
33.7 System Reliability ... 58
34 Rates and Charges ... 58
34.1 Monthly Demand Charge ... 58
34.2 Determination of Network Customer's Monthly Network Load ... 58
34.3 Determination of Transmission Provider's Monthly Transmission System Load ... 58
34.4 Redispatch Charge ... 59
34.5 Stranded Cost Recovery ... 59
35 Operating Arrangements ... 59
35.1 Operation under The Network Operating Agreement ... 59
35.2 Network Operating Agreement ... 59
35.3 Network Operating Committee ... 60
SCHEDULE 1 ... 61
Scheduling, System Control and Dispatch Service ... 61
SCHEDULE 2 ... 62
Reactive Supply and Voltage Control from Generation or Other Sources Service ... 62
SCHEDULE 3 ... 63
Regulation and Frequency Response Service ... 63
SCHEDULE 4 ... 64
Energy Imbalance Service ... 64
SCHEDULE 5 ... 65
Operating Reserve - Spinning Reserve Service ... 65
SCHEDULE 6 ... 66
Operating Reserve - Supplemental Reserve Service ... 66
SCHEDULE 7 ... 67
Long-Term Firm and Short-Term Firm Point-to-Point Transmission Service ... 67
SCHEDULE 8 ... 68
Non-Firm Point-To-Point Transmission Service ... 68
ATTACHMENT A ... 71
Service Agreement for Firm Point-To-Point Transmission Service ... 71
ATTACHMENT B ... 81
Service Agreement for Non-Firm Point-To-Point Transmission Service ... 81
ATTACHMENT C ... 85
Methodology to Assess Available Transfer Capability ... 85
ATTACHMENT D ... 114
Methodology for Completing a System Impact Study ... 114

ATTACHMENT E 115
Index of Point-To-Point Transmission Service Customers 115
ATTACHMENT F 116
Service Agreement for Network Integration Transmission Service 116
ATTACHMENT G 121
Network Operating Agreement 121
ATTACHMENT H 122
Annual Transmission Revenue Requirement for Network Integration Transmission Service 122
ATTACHMENT I 123
Index of Network Integration Customers 123
ATTACHMENT J 124
Provisions Specific to the Transmission Provider 124
ATTACHMENT K 129
Authorities and Obligations 129
ATTACHMENT L 134
Standard Large Generator Interconnection Procedures Including Standard Large Generator Interconnection Agreement 134
ATTACHMENT M 135
Standard Small Generator Interconnection Procedures Including Standard Small Generator Interconnection Agreement 135
ATTACHMENT N 136
North American Energy Standards Board Wholesale Electric Quadrant Standards 136
ATTACHMENT O 138
Procedures for Addressing Parallel Flows 138
ATTACHMENT P 139
Transmission Planning Process 139
ATTACHMENT Q 203
Creditworthiness Procedures 203

WESTERN AREA POWER ADMINISTRATION

OPEN ACCESS TRANSMISSION SERVICE TARIFF

PART I. COMMON SERVICE PROVISIONS

1 Definitions

1.1 Affiliate: With respect to a corporation, partnership or other entity, each such other corporation, partnership or other entity that directly or indirectly, through one or more intermediaries, controls, is controlled by, or is under common control with, such corporation, partnership or other entity.

1.2 Ancillary Services: Those services that are necessary to support the transmission of capacity and energy from resources to loads while maintaining reliable operation of the Transmission Provider's Transmission System in accordance with Good Utility Practice.

1.3 Annual Transmission Costs: The total annual cost of the Transmission System for purposes of Network Integration Transmission Service shall be the amount specified in Attachment H until amended by the Transmission Provider or modified by the Commission, pursuant to Federal Law.

1.4 Application: A request by an Eligible Customer for transmission service pursuant to the provisions of the Tariff.

1.5 Clustering: The process whereby two or more Long-Term Firm Point-to-Point Transmission Service requests are studied together, instead of serially, for the purpose of conducting the System Impact Study in accordance with Section 19 of this Tariff.

1.6 Commission: The Federal Energy Regulatory Commission.

1.7 Completed Application: An Application that satisfies all of the information and other requirements of the Tariff, including any required deposit and application processing fee.

1.8 Control Area: An electric power system or combination of electric power systems to which a common automatic generation control scheme is applied in order to:

(1) match, at all times, the power output of the generators within the electric power system(s) and capacity and energy purchased from entities outside the electric power system(s), with the load within the electric power system(s);

(2) maintain scheduled interchange with other Control Areas, within the limits of Good Utility Practice;

(3) maintain the frequency of the electric power system(s) within reasonable limits in accordance with Good Utility Practice; and

(4) provide sufficient generating capacity to maintain operating reserves in accordance with Good Utility Practice.

1.9 Curtailment: A reduction in firm or non-firm transmission service in response to a transfer capability shortage as a result of system reliability conditions.

1.10 Delivering Party: The entity supplying capacity and energy to be transmitted at Point(s) of Receipt.

1.11 Designated Agent: Any entity that performs actions or functions on behalf of the Transmission Provider, an Eligible Customer, or the Transmission Customer required under the Tariff.

1.12 Direct Assignment Facilities: Facilities or portions of facilities that are constructed by the Transmission Provider for the sole use/benefit of a particular Transmission Customer requesting service under the Tariff. Direct Assignment Facilities shall be specified in the Service Agreement that governs service to the Transmission Customer.

1.13 Eligible Customer: (i) Any electric utility (including the Transmission Provider and any power marketer), Federal power marketing agency, or any person generating electric energy for sale for resale is an Eligible Customer under the Tariff. Electric energy sold or produced by such entity may be electric energy produced in the United States, Canada or Mexico. However, with respect to transmission service that the Commission is prohibited from ordering by Section 212(h) of the Federal Power Act, such entity is eligible only if the service is provided pursuant to a state requirement that the Transmission Provider offer the unbundled transmission service, or pursuant to a voluntary offer of such service by the Transmission Provider. (ii) Any retail customer taking unbundled transmission service pursuant to a state requirement that the Transmission Provider offer the transmission service, or pursuant to a voluntary offer of such service by the Transmission Provider, is an Eligible Customer under the Tariff.

1.14 Facilities Study: An engineering study conducted by the Transmission Provider to determine the required modifications to the Transmission Provider's Transmission System, including the cost and scheduled completion

date for such modifications, that will be required to provide the requested transmission service.

1.15 Firm Point-To-Point Transmission Service: Transmission Service under this Tariff that is reserved and/or scheduled between specified Points of Receipt and Delivery pursuant to Part II of this Tariff.

1.16 Good Utility Practice: Any of the practices, methods and acts engaged in or approved by a significant portion of the electric utility industry during the relevant time period, or any of the practices, methods and acts which, in the exercise of reasonable judgment in light of the facts known at the time the decision was made, could have been expected to accomplish the desired result at a reasonable cost consistent with good business practices, reliability, safety and expedition. Good Utility Practice is not intended to be limited to the optimum practice, method, or act to the exclusion of all others, but rather to be acceptable practices, methods, or acts generally accepted in the region, including those practices required by Federal Power Act section 215(a)(4).

1.17 Interruption: A reduction in non-firm transmission service due to economic reasons pursuant to Section 14.7.

1.18 Load Ratio Share: Ratio of a Transmission Customer's Network Load to the Transmission Provider's total load computed in accordance with Sections 34.2 and 34.3 of the Network Integration Transmission Service under Part III of the Tariff and calculated on a rolling twelve month basis.

1.19 Load Shedding: The systematic reduction of system demand by temporarily decreasing load in response to transmission system or area capacity shortages, system instability, or voltage control considerations under Part III of the Tariff.

1.20 Long-Term Firm Point-To-Point Transmission Service: Firm Point-To-Point Transmission Service under Part II of the Tariff with a term of one year or more.

1.21 Native Load Customers: The wholesale and retail power customers of the Transmission Provider on whose behalf the Transmission Provider, by statute, franchise, regulatory requirement, or contract, has undertaken an obligation to construct and operate the Transmission Provider's system to meet the reliable electric needs of such customers.

1.22 Network Customer: An entity receiving transmission service pursuant to the terms of the Transmission Provider's Network Integration Transmission Service under Part III of the Tariff.

1.23 Network Integration Transmission Service: The transmission service provided under Part III of the Tariff.

1.24 Network Load: The load that a Network Customer designates for Network Integration Transmission Service under Part III of the Tariff. The Network Customer's Network Load shall include all load served by the output of any Network Resources designated by the Network Customer. A Network Customer may elect to designate less than its total load as Network Load but may not designate only part of the load at a discrete Point of Delivery. Where a Eligible Customer has elected not to designate a particular load at discrete points of delivery as Network Load, the Eligible Customer is responsible for making separate arrangements under Part II of the Tariff for any Point-To-Point Transmission Service that may be necessary for such non-designated load.

1.25 Network Operating Agreement: An executed agreement that contains the terms and conditions under which the Network Customer shall operate its facilities and the technical and operational matters associated with the implementation of Network Integration Transmission Service under Part III of the Tariff.

1.26 Network Operating Committee: A group made up of representatives from the Network Customer(s) and the Transmission Provider established to coordinate operating criteria and other technical considerations required for implementation of Network Integration Transmission Service under Part III of this Tariff.

1.27 Network Resource: Any designated generating resource owned, purchased, or leased by a Network Customer under the Network Integration Transmission Service Tariff. Network Resources do not include any resource, or any portion thereof, that is committed for sale to third parties or otherwise cannot be called upon to meet the Network Customer's Network Load on a non-interruptible basis, except for purposes of fulfilling obligations under a reserve sharing program.

1.28 Network Upgrades: Modifications or additions to transmission-related facilities that are integrated with and support the Transmission Provider's overall Transmission System for the general benefit of all users of such Transmission System.

1.29 New Rate: Means the modification of a Rate for transmission or ancillary services provided by the Transmission Provider which has been promulgated pursuant to the rate development process outlined in Power And Transmission Rates, 10 C.F.R. Part 903 (2006).

1.30 Non-Firm Point-To-Point Transmission Service: Point-To-Point Transmission Service under the Tariff that is reserved and scheduled on an as-available basis

and is subject to Curtailment or Interruption as set forth in Section 14.7 under Part II of the Tariff. Non-Firm Point-To-Point Transmission Service is available on a stand-alone basis for periods ranging from one hour to one month. The Transmission provider may offer Non-Firm Point-To-Point Transmission Service for periods longer than one month. If offered, the terms and conditions will be consistent with Part II of the Tariff and will be posted on the Transmission Provider's OASIS.

1.31 Non-Firm Sale: An energy sale for which receipt or delivery may be interrupted for any reason or no reason, without liability on the part of either the buyer or seller.

1.32 Open Access Same-Time Information System (OASIS): The information system and standards of conduct contained in Part 37 of the Commission's regulations and all additional requirements implemented by subsequent Commission orders dealing with OASIS.

1.33 Part I: Tariff Definitions and Common Service Provisions contained in Sections 2 through 12.

1.34 Part II: Tariff Sections 13 through 27 pertaining to Point-To-Point Transmission Service in conjunction with the applicable Common Service Provisions of Part I and appropriate Schedules and Attachments.

1.35 Part III: Tariff Sections 28 through 35 pertaining to Network Integration Transmission Service in conjunction with the applicable Common Service Provisions of Part I and appropriate Schedules and Attachments.

1.36 Parties: The Transmission Provider and the Transmission Customer receiving service under the Tariff.

1.37 Point(s) of Delivery: Point(s) on the Transmission Provider's Transmission System where capacity and energy transmitted by the Transmission Provider will be made available to the Receiving Party under Part II of the Tariff. The Point(s) of Delivery shall be specified in the Service Agreement for Long-Term Firm Point-to-Point Transmission Service.

1.38 Point(s) of Receipt: Point(s) of interconnection on the Transmission Provider's Transmission System where capacity and energy will be made available to the Transmission Provider by the Delivering Party under Part II of the Tariff. The Point(s) of Receipt shall be specified in the Service Agreement for Long-Term Firm Point-to-Point Transmission Service.

1.39 Point-To-Point Transmission Service: The reservation and transmission of capacity and energy on either a firm or non-firm basis from the Point(s) of Receipt to the Point(s) of Delivery under Part II of the Tariff.

1.40 Power Purchaser: The entity that is purchasing the capacity and energy to be transmitted under the Tariff.

1.41 Pre-Confirmed Application: An Application that commits the Eligible Customer to execute a Service Agreement upon receipt of notification that the Transmission Provider can provide the requested Transmission Service.

1.42 Rate: Means the monetary charge or the formula for computing such a charge for any electric service provided a the Transmission Provider as defined in 10 C.F.R. § 903.2(k)(1) (2006).

1.43 Rate Adjustment: Means a change in an existing rate or rates, or the establishment of a rate or rates for a new service. It does not include a change in rate schedule provisions or in contract terms, other than changes in the price per unit of service, nor does it include changes in the monetary charge pursuant to a formula stated in a rate schedule or a contract as defined in 10 C.F.R. § 903.2(k)(m) (2006).

1.44 Rate Formula Adjustment: Means a change in an existing rate formula, or the establishment of a rate formula for a new service. It does not include updates to the monetary charge pursuant to a formula stated in a rate schedule or a contract.

1.45 Reasonable Efforts: With respect to an action required to be attempted or taken by a Party under this Tariff, efforts that are timely and consistent with Good Utility Practice and are otherwise substantially equivalent to those a Party would use to protect its own interests.

1.46 Receiving Party: The entity receiving the capacity and energy transmitted by the Transmission Provider to Point(s) of Delivery.

1.47 Regional Transmission Group (RTG): A voluntary organization of transmission owners, transmission users and other entities approved by the Commission to efficiently coordinate transmission planning (and expansion), operation and use on a regional (and interregional) basis.

1.48 Reserved Capacity: The maximum amount of capacity and energy that the Transmission Provider agrees to transmit for the Transmission Customer over the Transmission Provider's Transmission System between the Point(s) of Receipt and the Point(s) of Delivery under Part II of the Tariff. Reserved

Capacity shall be expressed in terms of whole megawatts on a sixty (60) minute interval (commencing on the clock hour) basis.

1.49 Service Agreement: The initial agreement and any amendments or supplements thereto entered into by the Transmission Customer and the Transmission Provider for service under the Tariff.

1.50 Service Commencement Date: The date the Transmission Provider begins to provide service pursuant to the terms of an executed Service Agreement, or the date the Transmission Provider begins to provide service in accordance with Section 15.3 or Section 29.1 under the Tariff.

1.51 Short-Term Firm Point-To-Point Transmission Service: Firm Point-To-Point Transmission Service under Part II of the Tariff with a term of less than one year.

1.52 System Condition: A specified condition on the Transmission Provider's system or on a neighboring system, such as a constrained transmission element or flowgate, that may trigger Curtailment of Long-Term Firm Point-to-Point Transmission Service using the curtailment priority pursuant to Section 13.6. Such conditions must be identified in the Transmission Customer's Service Agreement.

1.53 System Impact Study: An assessment by the Transmission Provider of (i) the adequacy of the Transmission System to accommodate a request for either Firm Point-To-Point Transmission Service or Network Integration Transmission Service and (ii) whether any additional costs may be incurred in order to provide transmission service.

1.54 Third-Party Sale: Any sale for resale in interstate commerce to a Power Purchaser that is not designated as part of Network Load under the Network Integration Transmission Service.

1.55 Transmission Customer: Any Eligible Customer (or its Designated Agent) that (i) executes a Service Agreement, or (ii) requests in writing that the Transmission Provider provide transmission service without a Service Agreement, pursuant to section 15.3 of the Tariff. This term is used in the Part I Common Service Provisions to include customers receiving transmission service under Part II and Part III of this Tariff.

1.56 Transmission Provider: The Regional Office of the Western Area Power Administration (Western) which owns, controls, or operates the facilities used for the transmission of electric energy in interstate commerce and provides transmission service under the Tariff.

1.57 Transmission Provider's Monthly Transmission System Peak: The maximum firm usage of the Transmission Provider's Transmission System in a calendar month.

1.58 Transmission Service: Point-To-Point Transmission Service provided under Part II of the Tariff on a firm and non-firm basis.

1.59 Transmission System: The facilities owned, controlled or operated by the Transmission Provider that are used to provide transmission service under Part II and Part III of the Tariff.

2 Initial Allocation and Renewal Procedures

2.1 Initial Allocation of Available Transfer Capability: For purposes of determining whether existing capability on the Transmission Provider's Transmission System is adequate to accommodate a request for firm service under this Tariff, all Completed Applications for new firm transmission service received during the initial sixty (60) day period commencing with the effective date of the Tariff will be deemed to have been filed simultaneously. A lottery system conducted by an independent party shall be used to assign priorities for Completed Applications filed simultaneously. All Completed Applications for firm transmission service received after the initial sixty (60) day period shall be assigned a priority pursuant to Section 13.2.

2.2 Reservation Priority For Existing Firm Service Customers: Existing firm service customers (wholesale requirements and transmission-only, with a contract term of five years or more), have the right to continue to take transmission service from the Transmission Provider when the contract expires, rolls over or is renewed. This transmission reservation priority is independent of whether the existing customer continues to purchase capacity and energy from the Transmission Provider or elects to purchase capacity and energy from another supplier. If at the end of the contract term, the Transmission Provider's Transmission System cannot accommodate all of the requests for transmission service, the existing firm service customer must agree to accept a contract term at least equal to a competing request by any new Eligible Customer and to pay the current rate for such service; provided that, the firm service customer shall have a right of first refusal at the end of such service only if the new contract is for five years or more. The existing firm service customer must provide notice to the Transmission Provider whether it will exercise its right of first refusal no less than one year prior to the expiration date of its transmission service agreement. This transmission reservation priority for existing firm service customers is an ongoing right that may be exercised at the end of all firm contract terms of five years or longer. Service agreements subject to a right of first refusal entered into prior to [the date of the Transmission Provider's filing adopting the reformed rollover language herein in compliance with Order

No. 890] or associated with a transmission service request received prior to July 13, 2007, unless terminated, will become subject to the five year/one year requirement on the first rollover date after [the date of the Transmission Provider's filing adopting the reformed rollover language herein in compliance with Order No. 890]; provided that, the one-year notice requirement shall apply to such service agreements with five years or more left in their terms as of the [date of the Transmission Provider's filing adopting the reformed rollover language herein in compliance with Order No. 890].

3 Ancillary Services

Ancillary Services are needed with transmission service to maintain reliability within and among the Control Areas affected by the transmission service. The Transmission Provider is required to provide (or offer to arrange with the local Control Area operator as discussed below), and the Transmission Customer is required to purchase, the following Ancillary Services (i) Scheduling, System Control and Dispatch, and (ii) Reactive Supply and Voltage Control from Generation or Other Sources.

The Transmission Provider is required to offer to provide (or offer to arrange with the local Control Area operator as discussed below) the following Ancillary Services only to the Transmission Customer serving load within the Transmission Provider's Control Area (i) Regulation and Frequency Response, (ii) Energy Imbalance, (iii) Operating Reserve - Spinning, and (iv) Operating Reserve - Supplemental. The Transmission Customer serving load within the Transmission Provider's Control Area, is required to acquire these Ancillary Services, whether from the Transmission Provider, from a third party, or by self-supply.

The Transmission Provider is required to provide (or offer to arrange with the local Control Area Operator as discussed below), to the extent it is physically feasible to do so from its resources or from resources available to it, Generator Imbalance Service when Transmission Service is used to deliver energy from a generator located within its Control Area. The Transmission Customer using Transmission Service to deliver energy from a generator located within the Transmission Provider's Control Area is required to acquire Generator Imbalance Service, whether from the Transmission Provider, from a third party, or by self-supply.

The Transmission Customer may not decline the Transmission Provider's offer of Ancillary Services unless it demonstrates that it has acquired the Ancillary Services from another source. However, when sufficient Federal generation is not available to provide the required Ancillary Services, the Transmission Provider will offer to make every effort to purchase Ancillary Services from others, as available. The costs of such purchases on behalf of a Transmission Customer will be passed directly through to that Transmission Customer. At the request of the Transmission Provider, the costs associated with the purchase of Ancillary Services from others may be collected from the Transmission Customer in advance of the provision of service. The Transmission Customer must list in its Application which Ancillary Services it will purchase from the Transmission Provider. A Transmission

Customer that exceeds its firm reserved capacity at any Point of Receipt or Point of Delivery or an Eligible Customer that uses Transmission Service at a Point of Receipt or Point of Delivery that it has not reserved is required to pay for all of the Ancillary Services identified in this section that were provided by the Transmission Provider associated with the unreserved service. The Transmission Customer or Eligible Customer will pay for Ancillary Services based on the amount of transmission service it used but did not reserve.

If the Transmission Provider is a utility providing transmission service, but is not a Control Area operator, it may be unable to provide some or all of the Ancillary Services. In this case, the Transmission Provider can fulfill its obligation to provide Ancillary Services by acting as the Transmission Customer's agent to secure these Ancillary Services from the Control Area operator. The Transmission Customer may elect to (i) have the Transmission Provider act as its agent, (ii) secure the Ancillary Services directly from the Control Area operator, or (iii) secure the Ancillary Services (discussed in Schedules 3, 4, 5, 6, and 9) from a third party or by self-supply when technically feasible.

The Transmission Provider shall specify the rate treatment and all related terms and conditions in the event of an unauthorized use of Ancillary Services by the Transmission Customer.

The specific Ancillary Services, prices and/or compensation methods for each are described on the Schedules that are attached to and made a part of the Tariff. Three principal requirements apply to discounts for Ancillary Services provided by the Transmission Provider in conjunction with its provision of transmission service as follows: (1) any offer of a discount made by the Transmission Provider must be announced to all Eligible Customers solely by posting on the OASIS, (2) any customer-initiated requests for discounts (including requests for use by one's wholesale merchant or an Affiliate's use) must occur solely by posting on the OASIS, and (3) once a discount is negotiated, details must be immediately posted on the OASIS. A discount agreed upon for an Ancillary Service must be offered for the same period to all Eligible Customers on the Transmission Provider's system. Sections 3.1 through 3.7 below list the seven Ancillary Services.

3.1 Scheduling, System Control and Dispatch Service: The rates and/or methodology are described in Schedule 1.

3.2 Reactive Supply and Voltage Control from Generation or Other Sources Service: The rates and/or methodology are described in Schedule 2.

3.3 Regulation and Frequency Response Service: Where applicable the rates and/or methodology are described in Schedule 3.

3.4 Energy Imbalance Service: Where applicable the rates and/or methodology are described in Schedule 4.

3.5 Operating Reserve - Spinning Reserve Service: Where applicable the rates and/or methodology are described in Schedule 5.

3.6 Operating Reserve - Supplemental Reserve Service: Where applicable the rates and/or methodology are described in Schedule 6.

3.7 Generator Imbalance Service: Where applicable the rates and/or methodology are described in Schedule 9.

4 Open Access Same-Time Information System (OASIS)

4.1 Terms and conditions regarding Open Access Same-Time Information System and standards of conduct are set forth in 18 C.F.R. § 37 of the Commission's regulations (Open Access Same-Time Information System and Standards of Conduct for Public Utilities) and 18 C.F.R. § 38 of the Commission's regulations (Business Practice Standards and Communication Protocols for Public Utilities). In the event available transfer capability as posted on the OASIS is insufficient to accommodate a request for firm transmission service, additional studies may be required as provided by this Tariff pursuant to Sections 19 and 32.

4.2 The North American Energy Standards Board Wholesale Electric Quadrant standards listed in Attachment N to this Tariff are incorporated herein.

4.3 The Transmission Provider shall post on OASIS and its public website an electronic link to all rules, standards and practices that (i) relate to the terms and conditions of transmission service, (ii) are not subject to a North American Energy Standards Board (NAESB) copyright restriction, and (iii) are not otherwise included in this Tariff. The Transmission Provider shall post on OASIS and on its public website an electronic link to the NAESB website where any rules, standards and practices that are protected by copyright may be obtained. The Transmission Provider shall also post on OASIS and its public website an electronic link to a statement of the process by which the Transmission Provider shall add, delete or otherwise modify the rules, standards and practices that are not included in this Tariff. Such process shall set forth the means by which the Transmission Provider shall provide reasonable advance notice to Transmission Customers and Eligible Customers of any such additions, deletions or modifications, the associated effective date, and any additional implementation procedures that the Transmission Provider deems appropriate.

5 Local Furnishing Bonds

5.1 Transmission Providers That Own Facilities Financed by Local Furnishing Bonds: This provision is applicable only to Transmission Providers that have

financed facilities for the local furnishing of electric energy with tax-exempt bonds, as described in Section 142(f) of the Internal Revenue Code ("local furnishing bonds"). Notwithstanding any other provision of this Tariff, the Transmission Provider shall not be required to provide transmission service to any Eligible Customer pursuant to this Tariff if the provision of such transmission service would jeopardize the tax-exempt status of any local furnishing bond(s) used to finance the Transmission Provider's facilities that would be used in providing such transmission service.

5.2 Alternative Procedures for Requesting Transmission Service:

(i) If the Transmission Provider determines that the provision of transmission service requested by an Eligible Customer would jeopardize the tax-exempt status of any local furnishing bond(s) used to finance its facilities that would be used in providing such transmission service, it shall advise the Eligible Customer within thirty (30) days of receipt of the Completed Application.

(ii) If the Eligible Customer thereafter renews its request for the same transmission service referred to in (i) by tendering an application under Section 211 of the Federal Power Act, the Transmission Provider, within ten (10) days of receiving a copy of the Section 211 application, will waive its rights to a request for service under Section 213(a) of the Federal Power Act and to the issuance of a proposed order under Section 212(c) of the Federal Power Act. The Commission, upon receipt of the Transmission Provider's waiver of its rights to a request for service under Section 213(a) of the Federal Power Act and to the issuance of a proposed order under Section 212(c) of the Federal Power Act, shall issue an order under Section 211 of the Federal Power Act. Upon issuance of the order under Section 211 of the Federal Power Act, the Transmission Provider shall be required to provide the requested transmission service in accordance with the terms and conditions of this Tariff.

6 Reciprocity

A Transmission Customer receiving transmission service under this Tariff agrees to provide comparable transmission service that it is capable of providing to the Transmission Provider on similar terms and conditions over facilities used for the transmission of electric energy owned, controlled or operated by the Transmission Customer and over facilities used for the transmission of electric energy owned, controlled or operated by the Transmission Customer's corporate Affiliates. A Transmission Customer that is a member of, or takes transmission service from, a power pool, Regional Transmission Group, Regional Transmission Organization (RTO), Independent System Operator (ISO) or other transmission organization approved by the Commission for the operation of transmission facilities, also agrees to provide comparable transmission service to the transmission-owning members of such power pool, Regional Transmission Group, RTO, ISO or other transmission organization on similar terms and conditions over facilities used for the transmission of

electric energy owned, controlled or operated by the Transmission Customer and over facilities used for the transmission of electric energy owned, controlled or operated by the Transmission Customer's corporate Affiliates.

This reciprocity requirement applies not only to the Transmission Customer that obtains transmission service under the Tariff, but also to all parties to a transaction that involves the use of transmission service under the Tariff, including the power seller, buyer and any intermediary, such as a power marketer. This reciprocity requirement also applies to any Eligible Customer that owns, controls or operates transmission facilities that uses an intermediary, such as a power marketer, to request transmission service under the Tariff. If the Transmission Customer does not own, control or operate transmission facilities, it must include in its Application a sworn statement of one of its duly authorized officers or other representatives that the purpose of its Application is not to assist an Eligible Customer to avoid the requirements of this provision.

7 Billing and Payment

7.1 Billing Procedures: Within a reasonable time after the first day of each month, the Transmission Provider shall submit an invoice to the Transmission Customer for charges for services under the Tariff. The charges shall be for all services furnished during the preceding month except for those Transmission Customers required to make advance payment pursuant to a rate schedule adopted in a public process. Invoices for Transmission Customers required to make advance payment shall be issued in accordance with the applicable rate schedule and will show the credits for any advance payments deposited and received by the Transmission Provider for the service month being billed. The invoice shall be paid by the Transmission Customer within twenty (20) days of receipt. All payments shall be made in immediately available funds payable to the Transmission Provider, or by wire transfer to a bank named by the Transmission Provider.

7.2 Unpaid Balances:

(a) Bills not paid in full by the Contractor by the due date specified in Section 7.1 shall bear an interest charge of five hundredths percent (0.05%) of the principal sum unpaid for each day payment is delinquent, to be added until the amount due is paid in full. Interest on delinquent amounts shall be calculated from the due date of the bill to the date of payment. When payments are made by mail, bills shall be considered as having been paid on the date of receipt by the Transmission Provider. Payments received will be first applied to the charges for late payment assessed on the principal and then to payment of the principal.

(b) In the event the Transmission Customer fails to make payment to the Transmission Provider on or before the due date as described above, twice within any twelve consecutive months, the Transmission Provider may

determine that the Transmission Customer presents a risk of future timely payments. If such determination is made, Transmission Provider will give written notice to the Transmission Customer that it must provide a form of collateral as identified in Attachment Q to this Tariff. Any dispute between the Transmission Customer and the Transmission Provider regarding elimination of additional collateral under this provision shall be covered under Section 12.

7.3 Customer Default: In the event the Transmission Customer fails, for any reason other than a billing dispute as described below, to make payment to the Transmission Provider on or before the due date as described above, and such failure of payment is not corrected within thirty (30) calendar days after the Transmission Provider notifies the Transmission Customer to cure such failure, a default by the Transmission Customer shall be deemed to exist. Within the same 30 calendar days after notice of failure to make payment, the Transmission Customer shall have the right of appeal to the Administrator of Western. The Transmission Provider shall submit its recommendation to the Administrator for review and approval, but shall not terminate service until the Administrator makes a determination on the Transmission Customer's appeal. In the event of a billing dispute between the Transmission Provider and the Transmission Customer, the Transmission Provider will continue to provide service under the Service Agreement as long as the Transmission Customer (i) continues to make all payments not in dispute, and (ii) pays into an independent escrow account the portion of the invoice in dispute, pending resolution of such dispute. If the Transmission Customer fails to meet these two requirements for continuation of service, then the Transmission Provider may provide notice to the Transmission Customer of its intention to suspend service in sixty (60) days, in accordance with Commission policy.

8 Accounting for the Transmission Provider's Use of the Tariff

The Transmission Provider shall record the following amounts, as outlined below.

8.1 Transmission Revenues: Include in a separate operating revenue account or subaccount the revenues it receives from Transmission Service when making Third-Party Sales under Part II of the Tariff.

8.2 Study Costs and Revenues: Include in a separate transmission operating expense account or subaccount, costs properly chargeable to expense that are incurred to perform any System Impact Studies or Facilities Studies which the Transmission Provider conducts to determine if it must construct new transmission facilities or upgrades necessary for its own uses, including making Third-Party Sales under the Tariff; and include in a separate operating revenue account or subaccount the revenues received for System Impact Studies or Facilities Studies performed when such amounts are separately stated and identified in the Transmission Customer's billing under the Tariff.

9 Regulatory Filings

Nothing contained in the Tariff or any Service Agreement shall be construed as affecting in any way the right of the Transmission Provider to unilaterally make changes in terms and conditions, classification of service, or Service Agreement, consistent with the Commission's rules and regulations and Transmission Providers statutory obligations.

Nothing contained in the Tariff or any Service Agreement shall be construed as affecting in any way the ability of any Party receiving service under the Tariff to exercise its rights under the Federal Power Act and pursuant to the Commission's rules and regulations promulgated thereunder.

10 Force Majeure and Indemnification

10.1 Force Majeure: An event of Force Majeure means any act of God, labor disturbance, act of the public enemy, war, insurrection, riot, fire, storm or flood, explosion, breakage or accident to machinery or equipment, any Curtailment, order, regulation or restriction imposed by governmental military or lawfully established civilian authorities, or any other cause beyond a Party's control. A Force Majeure event does not include an act of negligence or intentional wrongdoing. Neither the Transmission Provider nor the Transmission Customer will be considered in default as to any obligation under this Tariff if prevented from fulfilling the obligation due to an event of Force Majeure. However, a Party whose performance under this Tariff is hindered by an event of Force Majeure shall make all Reasonable Efforts to perform its obligations under this Tariff.

10.2 Indemnification: The Transmission Customer shall at all times indemnify, defend, and save the Transmission Provider harmless from, any and all damages, losses, claims, including claims and actions relating to injury to or death of any person or damage to property, demands, suits, recoveries, costs and expenses, court costs, attorney fees, and all other obligations by or to third parties, arising out of or resulting from the Transmission Provider's performance of its obligations under this Tariff on behalf of the Transmission Customer, except in cases of negligence or intentional wrongdoing by the Transmission Provider. The liability of the Transmission Provider shall be determined in accordance with the Federal Tort Claims Act provision set forth in Attachment J of this Tariff.

11 Creditworthiness

The Transmission Provider will specify its creditworthiness procedures in Attachment Q.

12 Dispute Resolution Procedures

12.1 Internal Dispute Resolution Procedures: Any dispute between a Transmission Customer and the Transmission Provider involving transmission service under the Tariff shall be referred to a designated senior representative of the Transmission Provider and a senior representative of the Transmission Customer for resolution on an informal basis as promptly as practicable. In the event the designated representatives are unable to resolve the dispute within thirty (30) days [or such other period as the Parties may agree upon] by mutual agreement, such dispute may be resolved in accordance with the procedures set forth below.

12.2 External Dispute Resolution Procedures: Any complaint arising concerning implementation of this Tariff shall be resolved as follows:

(a) through a dispute resolution process, pursuant to the terms of a Regional Transmission Group or applicable reliability council governing agreement of which both Parties are members; or

(b) if both Parties are not members of the same Regional Transmission Group or applicable reliability council, through a dispute resolution process agreed to by the Parties, or through a transmission complaint filed with the Commission to the extent the Commission has jurisdiction over such dispute.

12.3 Rights Under The Federal Power Act: Nothing in this section shall restrict the rights of any party to file a Complaint with the Commission under relevant provisions of the Federal Power Act.

PART II. POINT-TO-POINT TRANSMISSION SERVICE

Preamble

The Transmission Provider will provide Firm and Non-Firm Point-To-Point Transmission Service pursuant to the applicable terms and conditions of this Tariff. Point-To-Point Transmission Service is for the receipt of capacity and energy at designated Point(s) of Receipt and the transfer of such capacity and energy to designated Point(s) of Delivery.

13 Nature of Firm Point-To-Point Transmission Service

13.1 Term: The minimum term of Firm Point-To-Point Transmission Service shall be determined by the Transmission Provider as either one hour or one day and the maximum term shall be specified in the Service Agreement. Where applicable, the Transmission Provider shall post on its OASIS the rates, terms and conditions pertaining to its provision of hourly Firm Point-To-Point Transmission Service.

13.2 Reservation Priority:

(i) Long-Term Firm Point-To-Point Transmission Service shall be available on a first-come, first-served basis i.e., in the chronological sequence in which each Transmission Customer reserved service.

(ii) Reservations for Short-Term Firm Point-To-Point Transmission Service will be conditional based upon the length of the requested transaction or reservation. However, Pre-Confirmed Applications for Short-Term Point-to-Point Transmission Service will receive priority over earlier-submitted requests that are not Pre-Confirmed and that have equal or shorter duration. Among requests or reservations with the same duration and, as relevant, pre-confirmation status (pre-confirmed, confirmed, or not confirmed), priority will be given to an Eligible Customer's request or reservation that offers the highest price, followed by the date and time of the request or reservation.

(iii) If the Transmission System becomes oversubscribed, requests for service may preempt competing reservations up to the following conditional reservation deadlines; one day before the commencement of daily service, one week before the commencement of weekly service, and one month before the commencement of monthly service. Before the conditional reservation deadline, if available transfer capability is insufficient to satisfy all requests and reservations, an Eligible Customer with a reservation for shorter term service or equal duration service and lower price has the right of first refusal to match any longer term request or equal duration service with a higher price before losing its reservation priority. A longer term competing request for Short-Term Firm Point-To-Point Transmission Service will be granted if the Eligible Customer with the right of first refusal does not agree to match the competing request within 24 hours (or earlier if necessary to comply with the scheduling deadlines provided in Section 13.8) from being notified by the Transmission Provider of a longer-term competing request for Short-Term Firm Point-To-Point Transmission Service. When a longer duration request preempts multiple shorter duration reservations, the shorter duration reservations shall have simultaneous opportunities to exercise the right of first refusal. Duration, price and time of response will be used to determine the order by which the multiple shorter duration reservations will be able to exercise the right of first refusal. After the conditional reservation deadline, service will commence pursuant to the terms of Part II of the Tariff.

(iv) Firm Point-To-Point Transmission Service will always have a reservation priority over Non-Firm Point-To-Point Transmission Service under the Tariff. All Long-Term Firm Point-To-Point Transmission Service will have equal reservation priority with Native Load Customers and Network Customers.

Reservation priorities for existing firm service customers are provided in Section 2.2.

(v) For any requests for Short-Term Firm Point-to-Point Transmission Service for which the Transmission Provider's business practices establish an earliest time such requests are permitted to be submitted, any requests for such service submitted within a five (5) minute window following such earliest time shall be deemed to have been submitted simultaneously during such window. If sufficient transmission capacity is not available to meet all such requests submitted within any such five (5) minute window, the otherwise applicable priorities shall apply to allocation of transmission capacity to such requests; provided that, if the otherwise applicable priorities would be to allocate transmission capacity to transmission requests on a first-come, first-served basis (i.e., in the chronological sequence in which each Transmission Customer has requested service), transmission capacity shall instead be allocated to such transmission requests pursuant to a lottery that will select the order that such requests will be processed in a non-discriminatory and non-preferential manner. The Transmission Provider shall post on its OASIS the allocation methodology and associated business practices.

13.3 Use of Firm Transmission Service by the Transmission Provider: The Transmission Provider will be subject to the rates, terms and conditions of Part II of the Tariff when making Third-Party Sales under agreements executed on or after March 7, 1998. The Transmission Provider will maintain separate accounting, pursuant to Section 8, for any use of the Point-To-Point Transmission Service to make Third-Party Sales.

13.4 Service Agreements: The Transmission Provider shall offer a standard form Firm Point-To-Point Transmission Service Agreement (Attachment A) to an Eligible Customer when it submits a Completed Application for Long-Term Firm Point-To-Point Transmission Service. The Transmission Provider shall offer a standard form Firm Point-to-Point Transmission Service Agreement (Attachment A) to an Eligible Customer when it first submits a Completed Application for Short-Term Firm Point-to-Point Transmission Service pursuant to the Tariff. An Eligible Customer that uses Transmission Service at a Point of Receipt or Point of Delivery that it has not reserved and that has not executed a Service Agreement will be deemed, for purposes of assessing any appropriate charges and penalties, to have executed the appropriate Service Agreement. The Service Agreement shall, when applicable, specify any conditional curtailment options selected by the Transmission Customer. Where the Service Agreement contains conditional curtailment options and is subject to a biennial reassessment as described in Section 15.4, the Transmission Provider shall provide the Transmission Customer notice of any changes to the curtailment conditions no less than 90 days prior to the date for imposition of new curtailment conditions. Concurrent with such notice, the Transmission

Provider shall provide the Transmission Customer with the reassessment study and a narrative description of the study, including the reasons for changes to the number of hours per year or System Conditions under which conditional curtailment may occur.

13.5 Transmission Customer Obligations for Facility Additions or Redispatch Costs: In cases where the Transmission Provider determines that the Transmission System is not capable of providing Firm Point-To-Point Transmission Service without (1) degrading or impairing the reliability of service to Native Load Customers, Network Customers and other Transmission Customers taking Firm Point-To-Point Transmission Service, or (2) interfering with the Transmission Provider's ability to meet prior firm contractual commitments to others, the Transmission Provider will be obligated to expand or upgrade its Transmission System pursuant to the terms of Section 15.4. The Transmission Customer must agree to compensate the Transmission Provider in advance for any necessary transmission facility additions pursuant to the terms of Section 27. To the extent the Transmission Provider can relieve any system constraint by redispatching the Transmission Provider's resources, it shall do so, provided that the Eligible Customer agrees to compensate the Transmission Provider pursuant to the terms of Section 27 and agrees to either (i) compensate the Transmission Provider for any necessary transmission facility additions or (ii) accept the service subject to a biennial reassessment by the Transmission Provider of redispatch requirements as described in Section 15.4. Any redispatch, Network Upgrade or Direct Assignment Facilities costs to be charged to the Transmission Customer on an incremental basis under the Tariff will be specified in the Service Agreement or a separate agreement, as appropriate, prior to initiating service.

13.6 Curtailment of Firm Transmission Service: In the event that a Curtailment on the Transmission Provider's Transmission System, or a portion thereof, is required to maintain reliable operation of such system, Curtailments will be made on a non-discriminatory basis to the transaction(s) that effectively relieve the constraint. If multiple transactions require Curtailment, to the extent practicable and consistent with Good Utility Practice, the Transmission Provider will curtail service to Network Customers and Transmission Customers taking Firm Point-To-Point Transmission Service on a basis comparable to the curtailment of service to the Transmission Provider's Native Load Customers. All Curtailments will be made on a non-discriminatory basis, however, Non-Firm Point-To-Point Transmission Service shall be subordinate to Firm Transmission Service. Long-Term Firm Point-to-Point Service subject to conditions described in Section 15.4 shall be curtailed with secondary service in cases where the conditions apply, but otherwise will be curtailed on a pro rata basis with other Firm Transmission Service. When the Transmission Provider determines that an electrical emergency exists on its Transmission System and implements emergency procedures to Curtail Firm Transmission

Service, the Transmission Customer shall make the required reductions upon request of the Transmission Provider. However, the Transmission Provider reserves the right to Curtail, in whole or in part, any Firm Transmission Service provided under the Tariff when, in the Transmission Provider's sole discretion, an emergency or other unforeseen condition impairs or degrades the reliability of its Transmission System. The Transmission Provider will notify all affected Transmission Customers in a timely manner of any scheduled Curtailments.

13.7 Classification of Firm Transmission Service:

(a) The Transmission Customer taking Firm Point-To-Point Transmission Service may (1) change its Receipt and Delivery Points to obtain service on a non-firm basis consistent with the terms of Section 22.1 or (2) request a modification of the Points of Receipt or Delivery on a firm basis pursuant to the terms of Section 22.2.

(b) The Transmission Customer may purchase transmission service to make sales of capacity and energy from multiple generating units that are on the Transmission Provider's Transmission System. For such a purchase of transmission service, the resources will be designated as multiple Points of Receipt, unless the multiple generating units are at the same generating plant in which case the units would be treated as a single Point of Receipt.

(c) The Transmission Provider shall provide firm deliveries of capacity and energy from the Point(s) of Receipt to the Point(s) of Delivery. Each Point of Receipt at which firm transmission capacity is reserved by the Transmission Customer shall be set forth in the Firm Point-To-Point Service Agreement for Long-Term Firm Transmission Service along with a corresponding capacity reservation associated with each Point of Receipt. Points of Receipt and corresponding capacity reservations shall be as mutually agreed upon by the Parties for Short-Term Firm Transmission. Each Point of Delivery at which firm transfer capability is reserved by the Transmission Customer shall be set forth in the Firm Point-To-Point Service Agreement for Long-Term Firm Transmission Service along with a corresponding capacity reservation associated with each Point of Delivery. Points of Delivery and corresponding capacity reservations shall be as mutually agreed upon by the Parties for Short-Term Firm Transmission. The greater of either (1) the sum of the capacity reservations at the Point(s) of Receipt, or (2) the sum of the capacity reservations at the Point(s) of Delivery shall be the Transmission Customer's Reserved Capacity. The Transmission Customer will be billed for its Reserved Capacity under the terms of Schedule 7. The Transmission Customer may not exceed its firm capacity reserved at each Point of Receipt and each Point of Delivery except as otherwise specified in Section 22. The Transmission Provider shall specify in accordance with Schedule 10 of this Tariff the rate treatment and all related terms and conditions applicable in the event that a Transmission Customer,

(including Third-Party Sales by the Transmission Provider) exceeds its firm reserved capacity at any Point of Receipt or Point of Delivery or uses Transmission Service at a Point of Receipt or Point of Delivery that it has not reserved.

13.8 Scheduling of Firm Point-To-Point Transmission Service: Schedules for the Transmission Customer's Firm Point-To-Point Transmission Service must be submitted to the Transmission Provider no later than 10:00 a.m. [or a reasonable time that is generally accepted in the region and is consistently adhered to by the Transmission Provider] of the day prior to commencement of such service. Schedules submitted after 10:00 a.m. will be accommodated, if practicable. Hour-to-hour schedules of any capacity and energy that is to be delivered must be stated in increments of 1,000 kW per hour [or a reasonable increment that is generally accepted in the region and is consistently adhered to by the Transmission Provider]. Transmission Customers within the Transmission Provider's service area with multiple requests for Transmission Service at a Point of Receipt, each of which is under 1,000 kW per hour, may consolidate their service requests at a common point of receipt into units of 1,000 kW per hour for scheduling and billing purposes. Scheduling changes will be permitted up to twenty (20) minutes [or a reasonable time that is generally accepted in the region and is consistently adhered to by the Transmission Provider] before the start of the next clock hour provided that the Delivering Party and Receiving Party also agree to the schedule modification. The Transmission Provider will furnish to the Delivering Party's system operator, hour-to-hour schedules equal to those furnished by the Receiving Party (unless reduced for losses) and shall deliver the capacity and energy provided by such schedules. Should the Transmission Customer, Delivering Party or Receiving Party revise or terminate any schedule, such party shall immediately notify the Transmission Provider, and the Transmission Provider shall have the right to adjust accordingly the schedule for capacity and energy to be received and to be delivered.

14 Nature of Non-Firm Point-To-Point Transmission Service

14.1 Term: Non-Firm Point-To-Point Transmission Service will be available for periods ranging from one (1) hour to one (1) month. However, a Purchaser of Non-Firm Point-To-Point Transmission Service will be entitled to reserve a sequential term of service (such as a sequential monthly term without having to wait for the initial term to expire before requesting another monthly term) so that the total time period for which the reservation applies is greater than one month, subject to the requirements of Section 18.3.

14.2 Reservation Priority: Non-Firm Point-To-Point Transmission Service shall be available from transfer capability in excess of that needed for reliable service to Native Load Customers, Network Customers and other Transmission

Customers taking Long-Term and Short-Term Firm Point-To-Point Transmission Service. A higher priority will be assigned first to requests or reservations with a longer duration of service and second to Pre-Confirmed Applications. In the event the Transmission System is constrained, competing requests of the same Pre-Confirmation status and equal duration will be prioritized based on the highest price offered by the Eligible Customer for the Transmission Service. Eligible Customers that have already reserved shorter term service have the right of first refusal to match any longer term request before being preempted. A longer term competing request for Non-Firm Point-To-Point Transmission Service will be granted if the Eligible Customer with the right of first refusal does not agree to match the competing request: (a) immediately for hourly Non-Firm Point-To-Point Transmission Service after notification by the Transmission Provider; and, (b) within 24 hours (or earlier if necessary to comply with the scheduling deadlines provided in Section 14.6) for Non-Firm Point-To-Point Transmission Service other than hourly transactions after notification by the Transmission Provider. Transmission service for Network Customers from resources other than designated Network Resources will have a higher priority than any Non-Firm Point-To-Point Transmission Service. Non-Firm Point-To-Point Transmission Service over secondary Point(s) of Receipt and Point(s) of Delivery will have the lowest reservation priority under the Tariff.

14.3 Use of Non-Firm Point-To-Point Transmission Service by the Transmission Provider: The Transmission Provider will be subject to the rates, terms and conditions of Part II of the Tariff when making Third-Party Sales under agreements executed on or after March 7, 1998. The Transmission Provider will maintain separate accounting, pursuant to Section 8, for any use of Non-Firm Point-To-Point Transmission Service to make Third-Party Sales.

14.4 Service Agreements: The Transmission Provider shall offer a standard form Non-Firm Point-To-Point Transmission Service Agreement (Attachment B) to an Eligible Customer when it first submits a Completed Application for Non-Firm Point-To-Point Transmission Service pursuant to the Tariff.

14.5 Classification of Non-Firm Point-To-Point Transmission Service: Non-Firm Point-To-Point Transmission Service shall be offered under terms and conditions contained in Part II of the Tariff. The Transmission Provider undertakes no obligation under the Tariff to plan its Transmission System in order to have sufficient capacity for Non-Firm Point-To-Point Transmission Service. Parties requesting Non-Firm Point-To-Point Transmission Service for the transmission of firm power do so with the full realization that such service is subject to availability and to Curtailment or Interruption under the terms of the Tariff. The Transmission Provider shall specify in accordance with Schedule 10 of this Tariff the rate treatment and all related terms and conditions applicable in the event that a Transmission Customer (including

Third-Party Sales by the Transmission Provider) exceeds its non-firm capacity reservation. Non-Firm Point-To-Point Transmission Service shall include transmission of energy on an hourly basis and transmission of scheduled short-term capacity and energy on a daily, weekly or monthly basis, but not to exceed one month's reservation for any one Application under Schedule 8.

14.6 Scheduling of Non-Firm Point-To-Point Transmission Service: Schedules for Non-Firm Point-To-Point Transmission Service must be submitted to the Transmission Provider no later than 2:00 p.m. [or a reasonable time that is generally accepted in the region and is consistently adhered to by the Transmission Provider] of the day prior to commencement of such service. Schedules submitted after 2:00 p.m. will be accommodated, if practicable. Hour-to-hour schedules of energy that are to be delivered must be stated in increments of 1,000 kW per hour [or a reasonable increment that is generally accepted in the region and is consistently adhered to by the Transmission Provider]. Transmission Customers within the Transmission Provider's service area with multiple requests for Transmission Service at a Point of Receipt, each of which is under 1,000 kW per hour, may consolidate their schedules at a common Point of Receipt into units of 1,000 kW per hour. Scheduling changes will be permitted up to twenty (20) minutes [or a reasonable time that is generally accepted in the region and is consistently adhered to by the Transmission Provider] before the start of the next clock hour provided that the Delivering Party and Receiving Party also agree to the schedule modification. The Transmission Provider will furnish to the Delivering Party's system operator, hour-to-hour schedules equal to those furnished by the Receiving Party (unless reduced for losses) and shall deliver the capacity and energy provided by such schedules. Should the Transmission Customer, Delivering Party or Receiving Party revise or terminate any schedule, such party shall immediately notify the Transmission Provider, and the Transmission Provider shall have the right to adjust accordingly the schedule for capacity and energy to be received and to be delivered.

14.7 Curtailment or Interruption of Service: The Transmission Provider reserves the right to Curtail, in whole or in part, Non-Firm Point-To-Point Transmission Service provided under the Tariff for reliability reasons when an emergency or other unforeseen condition threatens to impair or degrade the reliability of its Transmission System. The Transmission Provider reserves the right to Interrupt, in whole or in part, Non-Firm Point-To-Point Transmission Service provided under the Tariff for economic reasons in order to accommodate (1) a request for Firm Transmission Service, (2) a request for Non-Firm Point-To-Point Transmission Service of greater duration, (3) a request for Non-Firm Point-To-Point Transmission Service of equal duration with a higher price, (4) transmission service for Network Customers from non-designated resources, or (5) transmission service for Firm Point-to-Point Transmission Service during conditional curtailment periods as described in Section 15.4.

The Transmission Provider also will discontinue or reduce service to the Transmission Customer to the extent that deliveries for transmission are discontinued or reduced at the Point(s) of Receipt. Where required, Curtailments or Interruptions will be made on a non-discriminatory basis to the transaction(s) that effectively relieve the constraint, however, Non-Firm Point-To-Point Transmission Service shall be subordinate to Firm Transmission Service. If multiple transactions require Curtailment or Interruption, to the extent practicable and consistent with Good Utility Practice, Curtailments or Interruptions will be made to transactions of the shortest term (e.g., hourly non-firm transactions will be Curtailed or Interrupted before daily non-firm transactions and daily non-firm transactions will be Curtailed or Interrupted before weekly non-firm transactions). Transmission service for Network Customers from resources other than designated Network Resources will have a higher priority than any Non-Firm Point-To-Point Transmission Service under the Tariff. Non-Firm Point-To-Point Transmission Service over secondary Point(s) of Receipt and Point(s) of Delivery will have a lower priority than any Non-Firm Point-To-Point Transmission Service under the Tariff. The Transmission Provider will provide advance notice of Curtailment or Interruption where such notice can be provided consistent with Good Utility Practice.

15 Service Availability

15.1 General Conditions: The Transmission Provider will provide Firm and Non-Firm Point-To-Point Transmission Service over, on or across its Transmission System to any Transmission Customer that has met the requirements of Section 16.

15.2 Determination of Available Transfer Capability: A description of the Transmission Provider's specific methodology for assessing available transfer capability posted on the Transmission Provider's OASIS (Section 4) is contained in Attachment C of the Tariff. In the event sufficient transfer capability may not exist to accommodate a service request, the Transmission Provider will respond by performing a System Impact Study.

15.3 Initiating Service in the Absence of an Executed Service Agreement: If the Transmission Provider and the Transmission Customer requesting Firm or Non-Firm Point-To-Point Transmission Service cannot agree on all the terms and conditions of the Point-To-Point Service Agreement, the Transmission Provider shall commence providing Transmission Service subject to the Transmission Customer agreeing to (i) compensate the Transmission Provider at the existing rate placed in effect pursuant to applicable Federal law and regulations, and (ii) comply with the terms and conditions of the Tariff including paying the appropriate security deposit and processing fees in accordance with the terms of Section 17.3. If the Transmission Customer

cannot accept all of the terms and conditions of the offered Service Agreement, the Transmission Customer may request resolution of the unacceptable terms and conditions under Section 12, Dispute Resolution Procedures, of the Tariff. Any changes resulting from the Dispute Resolution Procedures will be effective upon the date of initial service.

15.4 Obligation to Provide Transmission Service that Requires Expansion or Modification of the Transmission System, Redispatch or Conditional Curtailment:

(a) If the Transmission Provider determines that it cannot accommodate a Completed Application for Firm Point-To-Point Transmission Service because of insufficient capability on its Transmission System, the Transmission Provider will use due diligence to expand or modify its Transmission System to provide the requested Firm Transmission Service, consistent with its planning obligations in Attachment P, provided the Transmission Customer agrees to compensate the Transmission Provider in advance for such costs pursuant to the terms of Section 27. The Transmission Provider will conform to Good Utility Practice and its planning obligations in Attachment P, in determining the need for new facilities and in the design and construction of such facilities. The obligation applies only to those facilities that the Transmission Provider has the right to expand or modify, and is contingent upon the availability to Transmission Provider of sufficient appropriations and/or authority, when needed, and the Transmission Customer's advanced funds.

(b) If the Transmission Provider determines that it cannot accommodate a Completed Application for Long-Term Firm Point-To-Point Transmission Service because of insufficient capability on its Transmission System, the Transmission Provider will use due diligence to provide redispatch from its own resources until (i) Network Upgrades are completed for the Transmission Customer, (ii) the Transmission Provider determines through a biennial reassessment that it can no longer reliably provide the redispatch, or (iii) the Transmission Customer terminates the service because of redispatch changes resulting from the reassessment. A Transmission Provider shall not unreasonably deny self-provided redispatch or redispatch arranged by the Transmission Customer from a third party resource.

(c) If the Transmission Provider determines that it cannot accommodate a Completed Application for Long-Term Firm Point-To-Point Transmission Service because of insufficient capability on its Transmission System, the Transmission Provider will offer the Firm Transmission Service with the condition that the Transmission Provider may curtail the service prior to the curtailment of other Firm Transmission Service for a specified number of hours per year or during System Condition(s). If the Transmission Customer accepts the service, the Transmission Provider will use due diligence to provide the

service until (i) Network Upgrades are completed for the Transmission Customer, (ii) the Transmission Provider determines through a biennial reassessment that it can no longer reliably provide such service, or (iii) the Transmission Customer terminates the service because the reassessment increased the number of hours per year of conditional curtailment or changed System Conditions.

15.5 Deferral of Service: The Transmission Provider may defer providing service until it completes construction of new transmission facilities or upgrades needed to provide Firm Point-To-Point Transmission Service whenever the Transmission Provider determines that providing the requested service would, without such new facilities or upgrades, impair or degrade reliability to any existing firm services.

15.6 Other Transmission Service Schedules: Eligible Customers receiving transmission service under other agreements on file with the Commission may continue to receive transmission service under those agreements until such time as those agreements may be modified by the Commission.

15.7 Real Power Losses: Real Power Losses are associated with all transmission service. The Transmission Provider is not obligated to provide Real Power Losses. The Transmission Customer is responsible for replacing losses associated with all transmission service as calculated by the Transmission Provider. The applicable Real Power Loss factors are specified in the Service Agreements.

16 Transmission Customer Responsibilities

16.1 Conditions Required of Transmission Customers: Point-To-Point Transmission Service shall be provided by the Transmission Provider only if the following conditions are satisfied by the Transmission Customer:

(a) The Transmission Customer has pending a Completed Application for service;

(b) The Transmission Customer meets the creditworthiness criteria set forth in Section 11;

(c) The Transmission Customer will have arrangements in place for any other transmission service necessary to effect the delivery from the generating source to the Transmission Provider prior to the time service under Part II of the Tariff commences;

(d) The Transmission Customer agrees to pay for any facilities constructed and chargeable to such Transmission Customer under Part II of the Tariff, whether

or not the Transmission Customer takes service for the full term of its reservation;

(e) The Transmission Customer provides the information required by the Transmission Provider's planning process established in Attachment P; and

(f) The Transmission Customer has executed a Point-To-Point Service Agreement or has agreed to receive service pursuant to Section 15.3.

16.2 Transmission Customer Responsibility for Third-Party Arrangements: Any scheduling arrangements that may be required by other electric systems shall be the responsibility of the Transmission Customer requesting service. The Transmission Customer shall provide, unless waived by the Transmission Provider, notification to the Transmission Provider identifying such systems and authorizing them to schedule the capacity and energy to be transmitted by the Transmission Provider pursuant to Part II of the Tariff on behalf of the Receiving Party at the Point of Delivery or the Delivering Party at the Point of Receipt. However, the Transmission Provider will undertake Reasonable Efforts to assist the Transmission Customer in making such arrangements, including without limitation, providing any information or data required by such other electric system pursuant to Good Utility Practice.

17 Procedures for Arranging Firm Point-To-Point Transmission Service

17.1 Application: A request for Firm Point-To-Point Transmission Service for periods of one year or longer must contain a written Application to the appropriate Regional Office, as identified in Attachment K to the Tariff, at least sixty (60) days in advance of the calendar month in which service is to commence. The Transmission Provider will consider requests for such firm service on shorter notice when feasible. Requests for firm service for periods of less than one year shall be subject to expedited procedures that shall be negotiated between the Parties within the time constraints provided in Section 17.5. All Firm Point-To-Point Transmission Service requests should be submitted by entering the information listed below on the Transmission Provider's OASIS. Prior to implementation of the Transmission Provider's OASIS, a Completed Application may be submitted by (i) transmitting the required information to the Transmission Provider by telefax, or (ii) providing the information by telephone over the Transmission Provider's time recorded telephone line. Each of these methods will provide a time-stamped record for establishing the priority of the Application.

17.2 Completed Application: A Completed Application shall provide all of the information included in 18 C.F.R. § 2.20 including but not limited to the following:

(i) The identity, address, telephone number and facsimile number of the entity requesting service;

(ii) A statement that the entity requesting service is, or will be upon commencement of service, an Eligible Customer under the Tariff;

(iii) The location of the Point(s) of Receipt and Point(s) of Delivery and the identities of the Delivering Parties and the Receiving Parties;

(iv) The location of the generating facility(ies) supplying the capacity and energy and the location of the load ultimately served by the capacity and energy transmitted. The Transmission Provider will treat this information as confidential except to the extent that disclosure of this information is required by the Tariff, by Federal law, by regulatory or judicial order, for reliability purposes pursuant to Good Utility Practice or pursuant to RTG transmission information sharing agreements. The Transmission Provider shall treat this information consistent with the standards of conduct contained in Part 37 of the Commission's regulations;

(v) A description of the supply characteristics of the capacity and energy to be delivered;

(vi) An estimate of the capacity and energy expected to be delivered to the Receiving Party;

(vii) The Service Commencement Date and the term of the requested Transmission Service;

(viii) The transmission capacity requested for each Point of Receipt and each Point of Delivery on the Transmission Provider's Transmission System; customers may combine their requests for service in order to satisfy the minimum transmission capacity requirement;

(ix) A statement indicating that, if the Eligible Customer submits a Pre-Confirmed Application, the Eligible Customer will execute a Service Agreement upon receipt of notification that the Transmission Provider can provide the requested Transmission Service; and

(x) Any additional information required by the Transmission Provider's planning process established in Attachment P.

The Transmission Provider shall treat this information consistent with the standards of conduct contained in Part 37 of the Commission's regulations.

17.3 Deposit and Processing Fee: For firm Transmission Service requests of one year or longer, a Completed Application for Firm Point-To-Point Transmission Service shall include: (1) a non-refundable processing fee of $3,500; and (2) a deposit of either one month's charge for Reserved Capacity (not to exceed $100,000) submitted to the Transmission Provider, or the same amount deposited into an escrow fund setup by the Eligible Customer. The application processing fee does not apply to costs to complete System Impact Studies or Facility Studies or to add new facilities. The specific requirements for the escrow fund will be posted on the Transmission Provider's OASIS. The Eligible Customer shall select one of the two options to satisfy the deposit requirement; provided, that the Transmission Customer will not be required to submit a deposit in the case of either a request for transmission service resulting only in modification to an existing Service Agreement, or a rollover of equivalent transmission service provided under either an existing Service Agreement or other existing bundled or standalone agreement executed prior to December 31, 1997. If the Application is rejected by the Transmission Provider because it does not meet the conditions for service as set forth herein, the Transmission Provider shall release the escrow fund or return the deposit, without interest. The Transmission Provider shall also release the escrow fund or return the deposit, without interest, if the Transmission Provider is unable to complete new facilities needed to provide the service. If an Application is withdrawn or the Eligible Customer decides not to enter into a Service Agreement for Firm Point-To-Point Transmission Service, the Transmission Provider shall release the escrow fund or return the deposit, without interest. Advanced payments associated with construction of new facilities are subject to the provisions of Section 19. If a Service Agreement for Firm Point-To-Point Transmission Service is executed, the Transmission Provider shall release the escrow fund following receipt of the Transmission Customer's payment for the first month of service, or the deposit, without interest, will be fully credited against the Transmission Customer's monthly transmission service bill(s) upon commencement of service.

17.4 Notice of Deficient Application: If an Application fails to meet the requirements of the Tariff, the Transmission Provider shall notify the entity requesting service within fifteen (15) days of receipt of the reasons for such failure. The Transmission Provider will attempt to remedy minor deficiencies in the Application through informal communications with the Eligible Customer. If such efforts are unsuccessful, the Transmission Provider shall return the Application and release the escrow fund or return the deposit, without interest. Upon receipt of a new or revised Application that fully complies with the requirements of Part II of the Tariff, the Eligible Customer

shall be assigned a new priority consistent with the date of the new or revised Application.

17.5 Response to a Completed Application: Following receipt of a Completed Application for Firm Point-To-Point Transmission Service, the Transmission Provider shall make a determination of available transfer capability as required in Section 15.2. The Transmission Provider shall notify the Eligible Customer as soon as practicable, but not later than thirty (30) days after the date of receipt of a Completed Application either (i) if it will be able to provide service without performing a System Impact Study or (ii) if such a study is needed to evaluate the impact of the Application pursuant to Section 19.1. Responses by the Transmission Provider must be made as soon as practicable to all completed applications (including applications by its own merchant function) and the timing of such responses must be made on a non-discriminatory basis.

17.6 Execution of a Service Agreement: Whenever the Transmission Provider determines that a System Impact Study is not required and that the service can be provided, it shall notify the Eligible Customer as soon as practicable but no later than thirty (30) days after receipt of the Completed Application. Where a System Impact Study is required, the provisions of Section 19 will govern the execution of a Service Agreement. Failure of an Eligible Customer to execute and return the Service Agreement or request service without an executed Service Agreement pursuant to Section 15.3, within fifteen (15) days after it is tendered by the Transmission Provider will be deemed a withdrawal and termination of the Application and pursuant to section 17.3, and release the escrow fund or return the deposit, without interest. Nothing herein limits the right of an Eligible Customer to file another Application after such withdrawal and termination.

17.7 Extensions for Commencement of Service: The Transmission Customer can obtain, subject to availability, up to five (5) one-year extensions for the commencement of service. The Transmission Customer may postpone service by paying a non-refundable annual reservation fee equal to one-month's charge for Firm Transmission Service for each year or fraction thereof within 15 days of notifying the Transmission Provider it intends to extend the commencement of service. If during any extension for the commencement of service an Eligible Customer submits a Completed Application for Firm Transmission Service, and such request can be satisfied only by releasing all or part of the Transmission Customer's Reserved Capacity, the original Reserved Capacity will be released unless the following condition is satisfied. Within thirty (30) days, the original Transmission Customer agrees to pay the Firm Point-To-Point transmission rate for its Reserved Capacity concurrent with the new Service Commencement Date. In the event the Transmission Customer elects to release the Reserved Capacity, the reservation fees or portions thereof previously paid will be forfeited.

18 Procedures for Arranging Non-Firm Point-To-Point Transmission Service

18.1 Application: Eligible Customers seeking Non-Firm Point-To-Point Transmission Service must submit a Completed Application to the Transmission Provider. Applications should be submitted by entering the information listed below on the Transmission Provider's OASIS. Prior to implementation of the Transmission Provider's OASIS, a Completed Application may be submitted by (i) transmitting the required information to the Transmission Provider by telefax, or (ii) providing the information by telephone over the Transmission Provider's time recorded telephone line. Each of these methods will provide a time-stamped record for establishing the service priority of the Application.

18.2 Completed Application: A Completed Application shall provide all of the information included in 18 C.F.R. § 2.20 including but not limited to the following:

(i) The identity, address, telephone number and facsimile number of the entity requesting service;

(ii) A statement that the entity requesting service is, or will be upon commencement of service, an Eligible Customer under the Tariff;

(iii) The Point(s) of Receipt and the Point(s) of Delivery;

(iv) The maximum amount of capacity requested at each Point of Receipt and Point of Delivery; and

(v) The proposed dates and hours for initiating and terminating transmission service hereunder.

In addition to the information specified above, when required to properly evaluate system conditions, the Transmission Provider also may ask the Transmission Customer to provide the following:

(vi) The electrical location of the initial source of the power to be transmitted pursuant to the Transmission Customer's request for service;

(vii) The electrical location of the ultimate load.

The Transmission Provider will treat this information in (vi) and (vii) as confidential at the request of the Transmission Customer except to the extent that disclosure of this information is required by this Tariff, by Federal Law, by regulatory or judicial order, for reliability purposes pursuant to Good Utility Practice, or pursuant to RTG

transmission information sharing agreements. The Transmission Provider shall treat this information consistent with the standards of conduct contained in Part 37 of the Commission's regulations.

(viii) A statement indicating that, if the Eligible Customer submits a Pre-Confirmed Application, the Eligible Customer will execute a Service Agreement upon receipt of notification that the Transmission Provider can provide the requested Transmission Service.

18.3 Reservation of Non-Firm Point-To-Point Transmission Service: Requests for monthly service shall be submitted no earlier than sixty (60) days before service is to commence; requests for weekly service shall be submitted no earlier than fourteen (14) days before service is to commence, requests for daily service shall be submitted no earlier than two (2) days before service is to commence, and requests for hourly service shall be submitted no earlier than noon the day before service is to commence. Requests for service received later than 2:00 p.m. prior to the day service is scheduled to commence will be accommodated if practicable [or such reasonable times that are generally accepted in the region and are consistently adhered to by the Transmission Provider].

18.4 Determination of Available Transfer Capability: Following receipt of a tendered schedule the Transmission Provider will make a determination on a non-discriminatory basis of available transfer capability pursuant to Section 15.2. Such determination shall be made as soon as reasonably practicable after receipt, but not later than the following time periods for the following terms of service (i) thirty (30) minutes for hourly service, (ii) thirty (30) minutes for daily service, (iii) four (4) hours for weekly service, and (iv) two (2) days for monthly service. [Or such reasonable times that are generally accepted in the region and are consistently adhered to by the Transmission Provider].

19 Additional Study Procedures For Firm Point-To-Point Transmission Service Requests

19.1 Notice of Need for System Impact Study: After receiving a request for service, the Transmission Provider shall determine on a non-discriminatory basis whether a System Impact Study is needed. A description of the Transmission Provider's methodology for completing a System Impact Study is provided in Attachment D. If the Transmission Provider determines that a System Impact Study is necessary to accommodate the requested service, it shall so inform the Eligible Customer, as soon as practicable. Once informed, the Eligible Customer shall timely notify the Transmission Provider if it elects to have the Transmission Provider study redispatch or conditional curtailment as part of the System Impact Study. If notification is provided prior to tender of the System Impact Study Agreement, the Eligible Customer can avoid the costs associated with the study of these options. The Transmission Provider shall

within thirty (30) days of receipt of a Completed Application, tender a System Impact Study Agreement pursuant to which the Eligible Customer shall agree to advance funds to the Transmission Provider for performing the required System Impact Study. For a service request to remain a Completed Application, the Eligible Customer shall execute the System Impact Study Agreement and return it to the Transmission Provider within fifteen (15) days. If the Eligible Customer elects not to execute the System Impact Study Agreement, its application shall be deemed withdrawn and pursuant to section 17.3, the Transmission Provider shall release the escrow fund or return the deposit, without interest.

19.2 Clustering of System Impact Studies: Clustering is intended to facilitate the Transmission Provider's performance of System Impact Studies for multiple Long-Term Firm Point-to-Point Transmission Service requests. At the request of an Eligible Customer and with the concurrence of all other Eligible Customers proposed to be included in the System Impact Study cluster, two or more Long-Term Firm Point-to-Point Transmission Service requests may be studied in a cluster for the purpose of the System Impact Study. If the Transmission Provider determines at its own discretion that it cannot reasonably accommodate a request for Clustering, including but not limited to instances where a request for Clustering may impair the administration or timely processing of the Transmission Provider's Transmission Service queue, the Transmission Provider may reject a request of an Eligible Customer to implement Clustering of System Impact Studies.

If the Transmission Provider determines based on an Eligible Customer's request and with the concurrence of other Eligible Customers within the proposed cluster to study Long-Term Firm Point-to-Point Transmission Service requests using Clustering, all Transmission Service requests within the cluster shall be studied together. Once such a cluster is established, no Eligible Customer shall be allowed to opt out of the cluster unless the Eligible Customer withdraws its Transmission Service request. If an Eligible Customer fails to make payment to the Transmission Provider as specified in the System Impact Study Agreement, such Eligible Customer will be deemed withdrawn from the cluster and its Transmission Service request shall also be deemed withdrawn. The deadline and procedures for completing all System Impact Studies for which a System Impact Study Agreement has been executed for a cluster shall be in accordance with Section 19 of this Tariff for all Transmission Service requests assigned to the same cluster. The initiation date of the System Impact Study for the cluster will take into consideration the time required to coordinate the completion of a System Impact Study Agreement among the cluster participants and the Transmission Provider, and such coordination may cause tender of the System Impact Study Agreement to extend beyond the time frame stated in Section 19.1.

The Transmission Provider will assign the cost of producing the clustered System Impact Study, including any third-party study work required by the Transmission Provider and any cost for restudy necessitated by a customer opting out of or being deemed withdrawn from the cluster, to each customer remaining in the cluster at the time of the cost allocation based on the ratio of the transmission capacity reservation of each such customer to the total transmission capacity reservation of all such customers.

19.3 System Impact Study Agreement and Compensation:

(i) The System Impact Study Agreement will clearly specify the Transmission Provider's estimate of the actual cost, and time for completion of the System Impact Study. The charge will not exceed the actual cost of the study. In performing the System Impact Study, the Transmission Provider shall rely, to the extent reasonably practicable, on existing transmission planning studies. The Eligible Customer will not be assessed a charge for such existing studies; however, the Eligible Customer will be responsible for charges associated with any modifications to existing planning studies that are reasonably necessary to evaluate the impact of the Eligible Customer's request for service on the Transmission System.

(ii) If in response to multiple Eligible Customers requesting service in relation to the same competitive solicitation, a single System Impact Study is sufficient for the Transmission Provider to accommodate the requests for service, the costs of that study shall be pro-rated among the Eligible Customers.

(iii) For System Impact Studies that the Transmission Provider conducts on its own behalf, the Transmission Provider shall record the cost of the System Impact Studies pursuant to Section 8.

19.4 System Impact Study Procedures: Upon receipt of an executed System Impact Study Agreement, the Transmission Provider will use Reasonable Efforts to complete the required System Impact Study within a sixty (60) day period. The System Impact Study shall identify (1) any system constraints, identified with specificity by transmission element or flowgate, (2) redispatch options (when requested by an Eligible Customer) including an estimate of the cost of redispatch, (3) conditional curtailment options (when requested by an Eligible Customer) including the number of hours per year and the System Conditions during which conditional curtailment may occur, and (4) additional Direct Assignment Facilities or Network Upgrades required to provide the requested service. For customers requesting the study of redispatch options, the System Impact Study shall (1) identify all resources located within the Transmission Provider's Control Area that can significantly contribute toward relieving the system constraint and (2) provide a measurement of each resource's impact on the system constraint. If the Transmission Provider possesses information

indicating that any resource outside its Control Area could relieve the constraint, it shall identify each such resource in the System Impact Study. In the event that the Transmission Provider is unable to complete the required System Impact Study within such time period, it shall so notify the Eligible Customer and provide an estimated completion date along with an explanation of the reasons why additional time is required to complete the required studies. A copy of the completed System Impact Study and related work papers shall be made available to the Eligible Customer as soon as the System Impact Study is complete. The Transmission Provider will use the same Reasonable Efforts in completing the System Impact Study for an Eligible Customer as it uses when completing studies for itself. The Transmission Provider shall notify the Eligible Customer immediately upon completion of the System Impact Study if the Transmission System will be adequate to accommodate all or part of a request for service or that no costs are likely to be incurred for new transmission facilities or upgrades. In order for a request to remain a Completed Application, within fifteen (15) days of completion of the System Impact Study the Eligible Customer must execute a Service Agreement or request service without an executed Service Agreement pursuant to Section 15.3, or the Application shall be deemed terminated and withdrawn.

19.5 Facilities Study Procedures: If a System Impact Study indicates that additions or upgrades to the Transmission System are needed to supply the Eligible Customer's service request, the Transmission Provider, within thirty (30) days of the completion of the System Impact Study, shall tender to the Eligible Customer a Facilities Study Agreement pursuant to which the Eligible Customer shall agree to advance funds to the Transmission Provider for performing the required Facilities Study. For a service request to remain a Completed Application, the Eligible Customer shall execute the Facilities Study Agreement and return it to the Transmission Provider within fifteen (15) days. If the Eligible Customer elects not to execute the Facilities Study Agreement, its application shall be deemed withdrawn. Upon receipt of an executed Facilities Study Agreement, the Transmission Provider will use Reasonable Efforts to complete the required Facilities Study within a sixty (60) day period. If the Transmission Provider is unable to complete the Facilities Study in the allotted time period, the Transmission Provider shall notify the Transmission Customer and provide an estimate of the time needed to reach a final determination along with an explanation of the reasons that additional time is required to complete the study. When completed, the Facilities Study will include a good faith estimate of (i) the cost of Direct Assignment Facilities to be charged to the Transmission Customer, (ii) the Transmission Customer's appropriate share of the cost of any required Network Upgrades as determined pursuant to the provisions of Part II of the Tariff, and (iii) the time required to complete such construction and initiate the requested service. The Transmission Customer shall pay the Transmission Provider in advance Transmission Customer's share of the costs of new facilities or

upgrades. The Transmission Customer shall have thirty (30) days to execute a construction agreement and a Service Agreement and provide the advance payment or request service without an executed Service Agreement pursuant to Section 15.3 and pay the Transmission Customer's share of the costs or the request will no longer be a Completed Application and shall be deemed terminated and withdrawn and pursuant to section 17.3, the Transmission Provider shall release the escrow fund or return the deposit, without interest. Any advance payment made by the Transmission Customer that is in excess of the costs incurred by the Transmission Provider shall be refunded.

19.6 Facilities Study Modifications: Any change in design arising from inability to site or construct facilities as proposed will require development of a revised good faith estimate. New good faith estimates also will be required in the event of new statutory or regulatory requirements that are effective before the completion of construction or other circumstances beyond the control of the Transmission Provider that significantly affect the final cost of new facilities or upgrades to be charged to the Transmission Customer pursuant to the provisions of Part II of the Tariff.

19.7 Due Diligence in Completing New Facilities: The Transmission Provider shall use due diligence to add necessary facilities or upgrade its Transmission System within a reasonable time. The Transmission Provider will not upgrade its existing or planned Transmission System in order to provide the requested Firm Point-To-Point Transmission Service if doing so would impair system reliability or otherwise impair or degrade existing firm service.

19.8 Partial Interim Service: If the Transmission Provider determines that it will not have adequate transfer capability to satisfy the full amount of a Completed Application for Firm Point-To-Point Transmission Service, the Transmission Provider nonetheless shall be obligated to offer and provide the portion of the requested Firm Point-To-Point Transmission Service that can be accommodated without addition of any facilities and through redispatch. However, the Transmission Provider shall not be obligated to provide the incremental amount of requested Firm Point-To-Point Transmission Service that requires the addition of facilities or upgrades to the Transmission System until such facilities or upgrades have been placed in service.

19.9 Expedited Procedures for New Facilities: In lieu of the procedures set forth above, the Eligible Customer shall have the option to expedite the process by requesting the Transmission Provider to tender at one time, together with the results of required studies, an "Expedited Service Agreement" pursuant to which the Eligible Customer would agree to compensate the Transmission Provider in advance for all costs incurred pursuant to the terms of the Tariff. In order to exercise this option, the Eligible Customer shall request in writing an expedited Service Agreement covering all of the above-specified items

within thirty (30) days of receiving the results of the System Impact Study identifying needed facility additions or upgrades or costs incurred in providing the requested service. While the Transmission Provider agrees to provide the Eligible Customer with its best estimate of the new facility costs and other charges that may be incurred, such estimate shall not be binding and the Eligible Customer must agree in writing to compensate the Transmission Provider in advance for all costs incurred pursuant to the provisions of the Tariff. The Eligible Customer shall execute and return such an Expedited Service Agreement within fifteen (15) days of its receipt or the Eligible Customer's request for service will cease to be a Completed Application and will be deemed terminated and withdrawn.

19.10 Study Metrics: Sections 19.4 and 19.5 require a Transmission Provider to use Reasonable Efforts to meet 60-day study completion deadlines for System Impact Studies and Facilities Studies.

For the purpose of calculating the percent of non-Affiliates' System Impact Studies processed outside of the 60 day study completion deadlines, the Transmission Provider shall consider all System Impact Studies and Facilities Studies that it completed for non-Affiliates during the calendar quarter. The percentage should be calculated by dividing the number of those studies which are completed on time by the total number of completed studies.

19.11 Notice of Need for Environmental Review: If the Transmission Provider determines that environmental review is required in response to a request for service the Transmission Provider shall use Reasonable Efforts to tender an environmental review agreement within 15 Calendar Days of providing a System Impact Study report to Eligible Customer. Pursuant to such agreement or agreements, the Eligible Customer shall make advance payment of funds to the Transmission Provider for performing the environmental review, including review under the National Environmental Policy Act (NEPA), 42 U.S.C. § 4321, et seq., as amended. The agreement(s) shall also set forth Eligible Customer's responsibilities in connection with such environmental review. The Eligible Customer shall execute and return each environmental review agreement, along with the required study funds due upon execution as set forth in the agreement, to the Transmission Provider within 30 calendar days of receipt of the final version offered for execution. If an executed environmental review agreement(s) and the required funds are not provided in the manner set forth above, the application shall be deemed withdrawn and, pursuant to Section 17.3, its deposit shall be returned, without interest, or the release of its escrow funds authorized. In addition, if at any time prior to the issuance of Transmission Providers final NEPA decisional document the Eligible Customer fails to comply with the terms of the environmental review agreement, Transmission Provider reserves the right to deem the request for service withdrawn.

20 Procedures if The Transmission Provider is Unable to Complete New Transmission Facilities for Firm Point-To-Point Transmission Service

20.1 Delays in Construction of New Facilities: If any event occurs that will materially affect the time for completion of new facilities, or the ability to complete them, the Transmission Provider shall promptly notify the Transmission Customer. In such circumstances, the Transmission Provider shall within thirty (30) days of notifying the Transmission Customer of such delays, convene a technical meeting with the Transmission Customer to evaluate the alternatives available to the Transmission Customer. The Transmission Provider also shall make available to the Transmission Customer studies and work papers related to the delay, including all information that is in the possession of the Transmission Provider that is reasonably needed by the Transmission Customer to evaluate any alternatives.

20.2 Alternatives to the Original Facility Additions: When the review process of Section 20.1 determines that one or more alternatives exist to the originally planned construction project, the Transmission Provider shall present such alternatives for consideration by the Transmission Customer. If, upon review of any alternatives, the Transmission Customer desires to maintain its Completed Application subject to construction of the alternative facilities, it may request the Transmission Provider to submit a revised Service Agreement for Firm Point-To-Point Transmission Service. If the alternative approach solely involves Non-Firm Point-To-Point Transmission Service, the Transmission Provider shall promptly tender a Service Agreement for Non-Firm Point-To-Point Transmission Service providing for the service. In the event the Transmission Provider concludes that no reasonable alternative exists and the Transmission Customer disagrees, the Transmission Customer may seek relief under the dispute resolution procedures pursuant to Section 12 or it may refer the dispute to the Commission for resolution.

20.3 Refund Obligation for Unfinished Facility Additions: If the Transmission Provider and the Transmission Customer mutually agree that no other reasonable alternatives exist and the requested service cannot be provided out of existing capability under the conditions of Part II of the Tariff, the obligation to provide the requested Firm Point-To-Point Transmission Service shall terminate and pursuant to section 17.3, the Transmission Provider shall release the escrow fund or return the deposit, without interest, and any advance payment made by the Transmission Customer that is in excess of the costs incurred by the Transmission Provider through the time construction was suspended shall be returned. However, the Transmission Customer shall be responsible for all prudently incurred costs by the Transmission Provider through the time construction was suspended.

21 Provisions Relating to Transmission Construction and Services on the Systems of Other Utilities

21.1 Responsibility for Third-Party System Additions: The Transmission Provider shall not be responsible for making arrangements for any necessary engineering, permitting, and construction of transmission or distribution facilities on the system(s) of any other entity or for obtaining any regulatory approval for such facilities. The Transmission Provider will undertake Reasonable Efforts to assist the Transmission Customer in obtaining such arrangements, including without limitation, providing any information or data required by such other electric system pursuant to Good Utility Practice.

21.2 Coordination of Third-Party System Additions: In circumstances where the need for transmission facilities or upgrades is identified pursuant to the provisions of Part II of the Tariff, and if such upgrades further require the addition of transmission facilities on other systems, the Transmission Provider shall have the right to coordinate construction on its own system with the construction required by others. The Transmission Provider, after consultation with the Transmission Customer and representatives of such other systems, may defer construction of its new transmission facilities, if the new transmission facilities on another system cannot be completed in a timely manner. The Transmission Provider shall notify the Transmission Customer in writing of the basis for any decision to defer construction and the specific problems which must be resolved before it will initiate or resume construction of new facilities. Within sixty (60) days of receiving written notification by the Transmission Provider of its intent to defer construction pursuant to this section, the Transmission Customer may challenge the decision in accordance with the dispute resolution procedures pursuant to Section 12 or it may refer the dispute to the Commission for resolution.

22 Changes in Service Specifications

22.1 Modifications On a Non-Firm Basis: The Transmission Customer taking Firm Point-To-Point Transmission Service may request the Transmission Provider to provide transmission service on a non-firm basis over Receipt and Delivery Points other than those specified in the Service Agreement ("Secondary Receipt and Delivery Points"), in amounts not to exceed its firm capacity reservation, without incurring an additional Non-Firm Point-To-Point Transmission Service charge or executing a new Service Agreement, subject to the following conditions.

(a) Service provided over Secondary Receipt and Delivery Points will be non-firm only, on an as-available basis and will not displace any firm or non-firm service reserved or scheduled by third-parties under the Tariff or by the Transmission Provider on behalf of its Native Load Customers.

(b) The sum of all Firm and non-firm Point-To-Point Transmission Service provided to the Transmission Customer at any time pursuant to this section shall not exceed the Reserved Capacity in the relevant Service Agreement under which such services are provided.

(c) The Transmission Customer shall retain its right to schedule Firm Point-To-Point Transmission Service at the Receipt and Delivery Points specified in the relevant Service Agreement in the amount of its original capacity reservation.

(d) Service over Secondary Receipt and Delivery Points on a non-firm basis shall not require the filing of an Application for Non-Firm Point-To-Point Transmission Service under the Tariff. However, all other requirements of Part II of the Tariff (except as to transmission rates) shall apply to transmission service on a non-firm basis over Secondary Receipt and Delivery Points.

22.2 Modifications On a Firm Basis: Any request by a Transmission Customer to modify Receipt and Delivery Points on a firm basis shall be treated as a new request for service in accordance with Section 17 hereof except that such Transmission Customer shall not be obligated to pay any additional deposit and application processing fee if the capacity reservation does not exceed the amount reserved in the existing Service Agreement. While such new request is pending, the Transmission Customer shall retain its priority for service at the existing firm Receipt and Delivery Points specified in its Service Agreement.

23 Sale or Assignment of Transmission Service

23.1 Procedures for Assignment or Transfer of Service: Subject to the Transmission Provider's prior approval, a Transmission Customer may sell, assign, or transfer all or a portion of its rights under its Service Agreement, but only to another Eligible Customer (the Assignee). The Transmission Customer that sells, assigns or transfers its rights under its Service Agreement is hereafter referred to as the Reseller. Compensation to the Reseller shall not exceed the higher of (i) the original rate paid by the Reseller, (ii) the Transmission Provider's maximum rate on file at the time of the assignment, or (iii) the Reseller's opportunity cost capped at the Transmission Provider's cost of expansion.

The Assignee must execute a service agreement with the Transmission Provider governing reassignments of transmission service prior to the date on which the reassigned service commences. If the Assignee does not request any change in the Point(s) of Receipt or the Point(s) of Delivery, or a change in any other term or condition set forth in the original Service Agreement, the Assignee will receive the same services as did the Reseller and the priority of service for the Assignee will be the same as that of the Reseller. The Assignee

will be subject to all terms and conditions of the Tariff. If the Assignee requests a change in service, the reservation priority of service will be determined by the Transmission Provider pursuant to Section 13.2.

23.2 Limitations on Assignment or Transfer of Service: If the Assignee requests a change in the Point(s) of Receipt or Point(s) of Delivery, or a change in any other specifications set forth in the original Service Agreement, the Transmission Provider will consent to such change subject to the provisions of the Tariff, provided that the change will not impair the operation and reliability of the Transmission Provider's generation, transmission, or distribution systems. The Assignee shall compensate the Transmission Provider in advance for performing any System Impact Study needed to evaluate the capability of the Transmission System to accommodate the proposed change and any additional costs resulting from such change. The Reseller shall remain liable for the performance of all obligations under the Service Agreement, except as specifically agreed to by the Transmission Provider and the Reseller through an amendment to the Service Agreement.

23.3 Information on Assignment or Transfer of Service: In accordance with Section 4, all sales or assignments of capacity must be conducted through or otherwise posted on the Transmission Provider's OASIS on or before the date the reassigned service commences and are subject to Section 23.1. Resellers may also use the Transmission Provider's OASIS to post transmission capacity available for resale.

24 Metering and Power Factor Correction at Receipt and Delivery Point(s)

24.1 Transmission Customer Obligations: Unless otherwise agreed, the Transmission Customer shall be responsible for installing and maintaining compatible metering and communications equipment to accurately account for the capacity and energy being transmitted under Part II of the Tariff and to communicate the information to the Transmission Provider. Such equipment shall remain the property of the Transmission Customer.

24.2 Transmission Provider Access to Metering Data: The Transmission Provider shall have access to metering data, which may reasonably be required to facilitate measurements and billing under the Service Agreement.

24.3 Power Factor: Unless otherwise agreed, the Transmission Customer is required to maintain a power factor within the same range as the Transmission Provider pursuant to Good Utility Practices. The power factor requirements are specified in the Service Agreement where applicable.

25 Compensation for Transmission Service

Rates for Firm and Non-Firm Point-To-Point Transmission Service are provided in the Schedules appended to the Tariff: Firm Point-To-Point Transmission Service (Schedule 7); and Non-Firm Point-To-Point Transmission Service (Schedule 8). The Transmission Provider shall use Part II of the Tariff to make its Third-Party Sales. The Transmission Provider shall account for such use at the applicable Tariff rates, pursuant to Section 8.

26 Stranded Cost Recovery

The Transmission Provider may seek to recover stranded costs from the Transmission Customer in a manner consistent with applicable Federal law and regulations.

27 Compensation for New Facilities and Redispatch Costs

Whenever a System Impact Study performed by the Transmission Provider in connection with the provision of Firm Point-To-Point Transmission Service identifies the need for new facilities, the Transmission Customer shall be responsible for such costs to the extent consistent with Commission policy. Whenever a System Impact Study performed by the Transmission Provider identifies capacity constraints that may be relieved by redispatching the Transmission Provider's resources to eliminate such constraints, the Transmission Customer shall be responsible for the redispatch costs to the extent consistent with Commission policy.

PART III. NETWORK INTEGRATION TRANSMISSION SERVICE

Preamble

The Transmission Provider will provide Network Integration Transmission Service pursuant to the applicable terms and conditions contained in the Tariff and Service Agreement. Network Integration Transmission Service allows the Network Customer to integrate, economically dispatch and regulate its current and planned Network Resources to serve its Network Load in a manner comparable to that in which the Transmission Provider utilizes its Transmission System to serve its Native Load Customers. Network Integration Transmission Service also may be used by the Network Customer to deliver economy energy purchases to its Network Load from non-designated resources on an as-available basis without additional charge. Transmission service for sales to non-designated loads will be provided pursuant to the applicable terms and conditions of Part II of the Tariff.

28 Nature of Network Integration Transmission Service

28.1 Scope of Service: Network Integration Transmission Service is a transmission service that allows Network Customers to efficiently and economically utilize their Network Resources (as well as other non-designated generation resources) to serve their Network Load located in the Transmission Provider's Control

Area and any additional load that may be designated pursuant to Section 31.3 of the Tariff. The Network Customer taking Network Integration Transmission Service must obtain or provide Ancillary Services pursuant to Section 3.

28.2 Transmission Provider Responsibilities: The Transmission Provider will plan, construct, operate and maintain its Transmission System in accordance with Good Utility Practice and its planning obligations in Attachment P in order to provide the Network Customer with Network Integration Transmission Service over the Transmission Provider's Transmission System. The Transmission Provider, on behalf of its Native Load Customers, shall be required to designate resources and loads in the same manner as any Network Customer under Part III of the Tariff. This information must be consistent with the information used by the Transmission Provider to calculate available transfer capability. The Transmission Provider shall include the Network Customer's Network Load in its Transmission System planning and shall, consistent with Good Utility Practice and Attachment P, endeavor to construct and place into service sufficient transfer capability to deliver the Network Customer's Network Resources to serve its Network Load on a basis comparable to the Transmission Provider's delivery of its own generating and purchased resources to its Native Load Customers. This obligation to construct and place into service sufficient transmission capacity to deliver the Network Customer's Network Resources to serve its Network Load is contingent upon the availability to Transmission Provider of sufficient appropriations and/or authority, when needed, and the Transmission Customer's advanced funds.

28.3 Network Integration Transmission Service: The Transmission Provider will provide firm transmission service over its Transmission System to the Network Customer for the delivery of capacity and energy from its designated Network Resources to service its Network Loads on a basis that is comparable to the Transmission Provider's use of the Transmission System to reliably serve its Native Load Customers.

28.4 Secondary Service: The Network Customer may use the Transmission Provider's Transmission System to deliver energy to its Network Loads from resources that have not been designated as Network Resources. Such energy shall be transmitted, on an as-available basis, at no additional charge. Secondary service shall not require the filing of an Application for Network Integration Transmission Service under the Tariff. However, all other requirements of Part III of the Tariff (except for transmission rates) shall apply to secondary service. Deliveries from resources other than Network Resources will have a higher priority than any Non-Firm Point-To-Point Transmission Service under Part II of the Tariff.

28.5 Real Power Losses: Real Power Losses are associated with all transmission service. The Transmission Provider is not obligated to provide Real Power

Losses. The Network Customer is responsible for replacing losses associated with all transmission service as calculated by the Transmission Provider. The applicable Real Power Loss factors are specified in the Service Agreements.

28.6 Restrictions on Use of Service: The Network Customer shall not use Network Integration Transmission Service for (i) sales of capacity and energy to non-designated loads, or (ii) direct or indirect provision of transmission service by the Network Customer to third parties. All Network Customers taking Network Integration Transmission Service shall use Point-To-Point Transmission Service under Part II of the Tariff for any Third-Party Sale which requires use of the Transmission Provider's Transmission System. The Transmission Provider shall specify in accordance with Schedule 10 of this Tariff any appropriate charges and penalties and all related terms and conditions applicable in the event that a Network Customer uses Network Integration Transmission Service or secondary service pursuant to Section 28.4 to facilitate a wholesale sale that does not serve a Network Load.

29 Initiating Service

29.1 Condition Precedent for Receiving Service: Subject to the terms and conditions of Part III of the Tariff, the Transmission Provider will provide Network Integration Transmission Service to any Eligible Customer provided that (i) the Eligible Customer completes an Application for service as provided under Part III of the Tariff, (ii) the Eligible Customer and the Transmission Provider complete the technical arrangements set forth in Sections 29.3 and 29.4, (iii) the Eligible Customer executes a Service Agreement pursuant to Attachment F for service under Part III of the Tariff or requests in writing that the Transmission Provider provide service without an executed Service Agreement, and (iv) the Eligible Customer executes a Network Operating Agreement with the Transmission Provider pursuant to Attachment G or requests in writing that the Transmission Provider provide service without an executed Network Operating Agreement. If the Transmission Provider and the Network Customer cannot agree on all the terms and conditions of the Network Service Agreement, the Transmission Provider shall commence providing Network Integration Transmission Service subject to the Network Customer agreeing to (i) compensate the Transmission Provider at the existing rate placed in effect pursuant to applicable Federal law and regulations, and (ii) comply with the terms and conditions of the Tariff including paying the appropriate processing fees in accordance with the terms of Section 29.2. If the Network Customer cannot accept all of the terms and conditions of the offered Service Agreement, the Network Customer may request resolution of the unacceptable terms and conditions under Section 12, Dispute Resolution Procedures, of the Tariff. Any changes resulting from the Dispute Resolution Procedures will be effective upon the date of initial service.

29.2 Application Procedures: An Eligible Customer requesting service under Part III of the Tariff must submit an Application to the Transmission Provider as far as possible in advance of the month in which service is to commence. For transmission service requests of one year or longer, the Completed Application shall include: (1) a non-refundable application processing fee of $3,500; and (2) a deposit approximating the charge for one month of service (not to exceed $100,000) submitted to the Transmission Provider, or the same amount deposited into an escrow fund setup by the Eligible Customer. The application processing fee does not apply to costs to complete System Impact Studies or Facility Studies or to add new facilities. The specific requirements for the escrow fund will be posted on the Transmission Provider's OASIS. The Eligible Customer shall select one of the two options to satisfy the deposit requirement; provided, that the Transmission Customer will not be required to submit a deposit in the case of either a request for transmission service resulting only in modification to an existing Service Agreement, or a rollover of equivalent transmission service provided under either an existing Service Agreement or other existing bundled or standalone agreement executed prior to December 31, 1997. If an Application is withdrawn or the Eligible Customer decides not to enter into a Service Agreement for Network Integration Transmission Service, the Transmission Provider shall release the escrow fund or return the deposit, without interest. If a Service Agreement for Network Integration Transmission Service is executed, the Transmission Provider shall release the escrow fund following receipt of the Transmission Customer's payment for the first month of service, or the deposit, without interest, will be fully credited against the Transmission Customer's monthly transmission service bill(s) upon commencement of service. Unless subject to the procedures in Section 2, Completed Applications for Network Integration Transmission Service will be assigned a priority according to the date and time the Application is received, with the earliest Application receiving the highest priority. Applications should be submitted by entering the information listed below on the Transmission Provider's OASIS. Prior to implementation of the Transmission Provider's OASIS, a Completed Application may be submitted by (i) transmitting the required information to the Transmission Provider by telefax, or (ii) providing the information by telephone over the Transmission Provider's time recorded telephone line. Each of these methods will provide a time-stamped record for establishing the service priority of the Application. A Completed Application shall provide all of the information included in 18 CFR § 2.20 including but not limited to the following:

(i) The identity, address, telephone number and facsimile number of the party requesting service;

(ii) A statement that the party requesting service is, or will be upon commencement of service, an Eligible Customer under the Tariff;

(iii) A description of the Network Load at each delivery point. This description should separately identify and provide the Eligible Customer's best estimate of the total loads to be served at each transmission voltage level, and the loads to be served from each Transmission Provider substation at the same transmission voltage level. The description should include a ten (10) year forecast of summer and winter load and resource requirements beginning with the first year after the service is scheduled to commence;

(iv) The amount and location of any interruptible loads included in the Network Load. This shall include the summer and winter capacity requirements for each interruptible load (had such load not been interruptible), that portion of the load subject to interruption, the conditions under which an interruption can be implemented and any limitations on the amount and frequency of interruptions. An Eligible Customer should identify the amount of interruptible customer load (if any), included in the 10 year load forecast provided in response to (iii) above;

(v) A description of Network Resources (current and 10-year projection). For each on-system Network Resource, such description shall include:

- Unit size and amount of capacity from that unit to be designated as Network Resource
- VAR capability (both leading and lagging), of all generators
- Operating restrictions
- Any periods of restricted operations throughout the year
- Maintenance schedules
- Minimum loading level of unit
- Normal operating level of unit
- Any must-run unit designations required for system reliability or contract reasons
- Approximate variable generating cost ($/MWH) for redispatch computations
- Arrangements governing sale and delivery of power to third parties from generating facilities located in the Transmission Provider Control Area, where only a portion of unit output is designated as a Network Resource

For each off-system Network Resource, such description shall include:

- Identification of the Network Resource as an off-system resource
- Amount of power to which the customer has rights
- Identification of the control area from which the power will originate, if required based on the Transmission Provider's posting on OASIS
- Delivery point(s) to the Transmission Provider's Transmission System
- Transmission arrangements on the external transmission system(s)
- Operating restrictions, if any
  - Any periods of restricted operations throughout the year
  - Maintenance schedules

- Minimum loading level of unit
- Normal operating level of unit
- Any must-run unit designations required for system reliability or contract reasons

- Approximate variable generating cost ($/MWH) for redispatch computations;

(vi) Description of Eligible Customer's transmission system:

- Load flow and stability data, such as real and reactive parts of the load, lines, transformers, reactive devices and load type, including normal and emergency ratings of all transmission equipment in a load flow format compatible with that used by the Transmission Provider
- Operating restrictions needed for reliability
- Operating guides employed by system operators
- Contractual restrictions or committed uses of the Eligible Customer's transmission system, other than the Eligible Customer's Network Loads and Resources
- Location of Network Resources described in subsection (v) above
- 10 year projection of system expansions or upgrades
- Transmission System maps that include any proposed expansions or upgrades
- Thermal ratings of Eligible Customer's Control Area ties with other Control Areas;

(vii) Service Commencement Date and the term of the requested Network Integration Transmission Service. The minimum term for Network Integration Transmission Service is one year.

(viii) A statement signed by an authorized officer from or agent of the Network Customer attesting that all of the network resources listed pursuant to Section 29.2(v) satisfy the following conditions: (1) the Network Customer owns the resource, has committed to purchase generation pursuant to an executed contract, or has committed to purchase generation where execution of a contract is contingent upon the availability of transmission service under Part III of the Tariff; and (2) the Network Resources do not include any resources, or any portion thereof, that are committed for sale to non-designated third party load or otherwise cannot be called upon to meet the Network Customer's Network Load on a noninterruptible basis, except for purposes of fulfilling obligations under a reserve sharing program; and

(ix) Any additional information required of the Transmission Customer as specified in the Transmission Provider's planning process established in Attachment P.

Unless the Parties agree to a different time frame, the Transmission Provider must acknowledge the request within ten (10) days of receipt. The acknowledgment must

include a date by which a response, including a Service Agreement, will be sent to the Eligible Customer. If an Application fails to meet the requirements of this section, the Transmission Provider shall notify the Eligible Customer requesting service within fifteen (15) days of receipt and specify the reasons for such failure. Wherever possible, the Transmission Provider will attempt to remedy deficiencies in the Application through informal communications with the Eligible Customer. If such efforts are unsuccessful, the Transmission Provider shall return the Application without prejudice to the Eligible Customer filing a new or revised Application that fully complies with the requirements of this section. The Eligible Customer will be assigned a new priority consistent with the date of the new or revised Application. The Transmission Provider shall treat this information consistent with the standards of conduct contained in Part 37 of the Commission's regulations.

29.3 Technical Arrangements to be Completed Prior to Commencement of Service: Network Integration Transmission Service shall not commence until the Transmission Provider and the Network Customer or a third party, have completed installation of all equipment specified under the Network Operating Agreement consistent with Good Utility Practice and any additional requirements reasonably and consistently imposed to ensure the reliable operation of the Transmission System. The Transmission Provider shall exercise Reasonable Efforts, in coordination with the Network Customer to complete such arrangements as soon as practicable taking into consideration the Service Commencement Date.

29.4 Network Customer Facilities: The provision of Network Integration Transmission Service shall be conditioned upon the Network Customer constructing, maintaining and operating the facilities on its side of each delivery point or interconnection necessary to reliably deliver capacity and energy from the Transmission Provider's Transmission System to the Network Customer. The Network Customer shall be solely responsible for constructing or installing all facilities on the Network Customer's side of each such delivery point or interconnection.

29.5 This section is intentionally left blank.

30 Network Resources

30.1 Designation of Network Resources: Network Resources shall include all generation owned, purchased, or leased by the Network Customer designated to serve Network Load under the Tariff. Network Resources may not include resources, or any portion thereof, that are committed for sale to non-designated third party load or otherwise cannot be called upon to meet the Network Customer's Network Load on a non-interruptible basis, except for purposes of fulfilling obligations under a reserve sharing program. Any owned or purchased resources that were serving the Network Customer's loads under

firm agreements entered into on or before the Service Commencement Date shall initially be designated as Network Resources until the Network Customer terminates the designation of such resources.

30.2 Designation of New Network Resources: The Network Customer may designate a new Network Resource by providing the Transmission Provider with as much advance notice as practicable. A designation of a new Network Resource must be made through the Transmission Provider's OASIS by a request for modification of service pursuant to an Application under Section 29. This request must include a statement that the new network resource satisfies the following conditions: (1) the Network Customer owns the resource, has committed to purchase generation pursuant to an executed contract, or has committed to purchase generation where execution of a contract is contingent upon the availability of transmission service under Part III of the Tariff; and (2) the Network Resources do not include any resources, or any portion thereof, that are committed for sale to non-designated third party load or otherwise cannot be called upon to meet the Network Customer's Network Load on a noninterruptible basis, except for purposes of fulfilling obligations under a reserve sharing program. The Network Customer's request will be deemed deficient if it does not include this statement and the Transmission Provider will follow the procedures for a deficient application as described in Section 29.2 of the Tariff.

30.3 Termination of Network Resources: The Network Customer may terminate the designation of all or part of a generating resource as a Network Resource at any time by providing notification to the Transmission Provider through OASIS as soon as reasonably practicable, but not later than the firm scheduling deadline for the period of termination. Any request for termination of Network Resource status must be submitted on OASIS, and should indicate whether the request is for indefinite or temporary termination. A request for indefinite termination of Network Resource status must indicate the date and time that the termination is to be effective, and the identification and capacity of the resource(s) or portions thereof to be indefinitely terminated. A request for temporary termination of Network Resource status must include the following:

(i) Effective date and time of temporary termination;

(ii) Effective date and time of redesignation, following period of temporary termination;

(iii) Identification and capacity of resource(s) or portions thereof to be temporarily terminated;

(iv) Resource description and attestation for redesignating the network resource following the temporary termination, in accordance with Section 30.2; and

(v) Identification of any related transmission service requests to be evaluated concomitantly with the request for temporary termination, such that the requests for undesignation and the request for these related transmission service requests must be approved or denied as a single request. The evaluation of these related transmission service requests must take into account the termination of the network resources identified in (iii) above, as well as all competing transmission service requests of higher priority.

As part of a temporary termination, a Network Customer may only redesignate the same resource that was originally designated, or a portion thereof. Requests to redesignate a different resource and/or a resource with increased capacity will be deemed deficient and the Transmission Provider will follow the procedures for a deficient application as described in Section 29.2 of the Tariff.

30.4 Operation of Network Resources: The Network Customer shall not operate its designated Network Resources located in the Network Customer's or Transmission Provider's Control Area such that the output of those facilities exceeds its designated Network Load, plus Non-Firm Sales delivered pursuant to Part II of the Tariff, plus losses, plus power sales under a reserve sharing program, plus sales that permit curtailment without penalty to serve its designated Network Load. This limitation shall not apply to changes in the operation of a Transmission Customer's Network Resources at the request of the Transmission Provider to respond to an emergency or other unforeseen condition which may impair or degrade the reliability of the Transmission System. For all Network Resources not physically connected with the Transmission Provider's Transmission System, the Network Customer may not schedule delivery of energy in excess of the Network Resource's capacity, as specified in the Network Customer's Application pursuant to Section 29, unless the Network Customer supports such delivery within the Transmission Provider's Transmission System by either obtaining Point-to-Point Transmission Service or utilizing secondary service pursuant to Section 28.4. The Transmission Provider shall specify the rate treatment and all related terms and conditions applicable in the event that a Network Customer's schedule at the delivery point for a Network Resource not physically interconnected with the Transmission Provider's Transmission System exceeds the Network Resource's designated capacity, excluding energy delivered using secondary service or Point-to-Point Transmission Service.

30.5 Network Customer Redispatch Obligation: As a condition to receiving Network Integration Transmission Service, the Network Customer agrees to redispatch its Network Resources as requested by the Transmission Provider pursuant to Section 33.2. To the extent practical, the redispatch of resources

pursuant to this section shall be on a least cost, non-discriminatory basis between all Network Customers, and the Transmission Provider.

30.6 Transmission Arrangements for Network Resources Not Physically Interconnected With The Transmission Provider: The Network Customer shall be responsible for any arrangements necessary to deliver capacity and energy from a Network Resource not physically interconnected with the Transmission Provider's Transmission System. The Transmission Provider will undertake Reasonable Efforts to assist the Network Customer in obtaining such arrangements, including without limitation, providing any information or data required by such other entity pursuant to Good Utility Practice.

30.7 Limitation on Designation of Network Resources: The Network Customer must demonstrate that it owns or has committed to purchase generation pursuant to an executed contract in order to designate a generating resource as a Network Resource. Alternatively, the Network Customer may establish that execution of a contract is contingent upon the availability of transmission service under Part III of the Tariff.

30.8 Use of Interface Capacity by the Network Customer: There is no limitation upon a Network Customer's use of the Transmission Provider's Transmission System at any particular interface to integrate the Network Customer's Network Resources (or substitute economy purchases) with its Network Loads. However, a Network Customer's use of the Transmission Provider's total interface capacity with other transmission systems may not exceed the Network Customer's Load.

30.9 Network Customer Owned Transmission Facilities: The Network Customer that owns existing transmission facilities that are integrated with the Transmission Provider's Transmission System may be eligible to receive consideration either through a billing credit or some other mechanism. In order to receive such consideration the Network Customer must demonstrate that its transmission facilities are integrated into the plans or operations of the Transmission Provider to serve its power and transmission customers. For facilities added by the Network Customer subsequent to May 14, 2007 (i.e., the effective date of the Commission's Order No. 890), the Network Customer shall receive credit for such transmission facilities added if such facilities are integrated into the operations of the Transmission Provider's facilities; provided however, the Network Customer's transmission facilities shall be presumed to be integrated if such transmission facilities, if owned by the Transmission Provider, would be eligible for inclusion in the Transmission Provider's annual transmission revenue requirement as specified in Attachment H. Calculation of any credit under this subsection shall be addressed in either the Network Customer's Service Agreement or any other agreement between the Parties.

31 Designation of Network Load

31.1 Network Load: The Network Customer must designate the individual Network Loads on whose behalf the Transmission Provider will provide Network Integration Transmission Service. The Network Loads shall be specified in the Service Agreement.

31.2 New Network Loads Connected With the Transmission Provider: The Network Customer shall provide the Transmission Provider with as much advance notice as reasonably practicable of the designation of new Network Load that will be added to its Transmission System. A designation of new Network Load must be made through a modification of service pursuant to a new Application. The Transmission Provider will use due diligence to install any transmission facilities required to interconnect a new Network Load designated by the Network Customer. The costs of new facilities required to interconnect a new Network Load shall be determined in accordance with the procedures provided in Section 32.4 and shall be charged to the Network Customer in accordance with Commission policies.

31.3 Network Load Not Physically Interconnected with the Transmission Provider: This section applies to both initial designation pursuant to Section 31.1 and the subsequent addition of new Network Load not physically interconnected with the Transmission Provider. To the extent that the Network Customer desires to obtain transmission service for a load outside the Transmission Provider's Transmission System, the Network Customer shall have the option of (1) electing to include the entire load as Network Load for all purposes under Part III of the Tariff and designating Network Resources in connection with such additional Network Load, or (2) excluding that entire load from its Network Load and purchasing Point-To-Point Transmission Service under Part II of the Tariff. To the extent that the Network Customer gives notice of its intent to add a new Network Load as part of its Network Load pursuant to this section the request must be made through a modification of service pursuant to a new Application.

31.4 New Interconnection Points: To the extent the Network Customer desires to add a new Delivery Point or interconnection point between the Transmission Provider's Transmission System and a Network Load, the Network Customer shall provide the Transmission Provider with as much advance notice as reasonably practicable.

31.5 Changes in Service Requests: Under no circumstances shall the Network Customer's decision to cancel or delay a requested change in Network Integration Transmission Service (e.g. the addition of a new Network Resource or designation of a new Network Load) in any way relieve the Network

Customer of its obligation to pay the costs of transmission facilities constructed by the Transmission Provider and charged to the Network Customer as reflected in the Service Agreement. However, the Transmission Provider must treat any requested change in Network Integration Transmission Service in a non-discriminatory manner. The Transmission Provider will have no obligation to refund any advance of funds expended for purposes of providing facilities for a Network Customer. However, upon receipt of a Network Customer's written notice of such a cancellation or delay, the Transmission Provider will use the same Reasonable Efforts to mitigate the costs and charges owed to the Transmission Provider as it would to reduce its own costs and charges.

31.6 Annual Load and Resource Information Updates: The Network Customer shall provide the Transmission Provider with annual updates of Network Load and Network Resource forecasts consistent with those included in its Application for Network Integration Transmission Service under Part III of the Tariff including, but not limited to, any information provided under section 29.2(ix) pursuant to the Transmission Provider's planning process in Attachment P. The Network Customer also shall provide the Transmission Provider with timely written notice of material changes in any other information provided in its Application relating to the Network Customer's Network Load, Network Resources, its transmission system or other aspects of its facilities or operations affecting the Transmission Provider's ability to provide reliable service.

32 Additional Study Procedures For Network Integration Transmission Service Requests

32.1 Notice of Need for System Impact Study: After receiving a request for service, the Transmission Provider shall determine on a non-discriminatory basis whether a System Impact Study is needed. A description of the Transmission Provider's methodology for completing a System Impact Study is provided in Attachment D. If the Transmission Provider determines that a System Impact Study is necessary to accommodate the requested service, it shall so inform the Eligible Customer, as soon as practicable. In such cases, the Transmission Provider shall within thirty (30) days of receipt of a Completed Application, tender a System Impact Study Agreement pursuant to which the Eligible Customer shall agree to advance funds to the Transmission Provider for performing the required System Impact Study. For a service request to remain a Completed Application, the Eligible Customer shall execute the System Impact Study Agreement and return it to the Transmission Provider within fifteen (15) days. If the Eligible Customer elects not to execute the System Impact Study Agreement, its Application shall be deemed withdrawn and pursuant to section 29.2, the Transmission Provider shall release the escrow fund or return the deposit, without interest.

32.2 System Impact Study Agreement and Compensation:

(i) The System Impact Study Agreement will clearly specify the Transmission Provider's estimate of the actual cost, and time for completion of the System Impact Study. The charge shall not exceed the actual cost of the study. In performing the System Impact Study, the Transmission Provider shall rely, to the extent reasonably practicable, on existing transmission planning studies. The Eligible Customer will not be assessed a charge for such existing studies; however, the Eligible Customer will be responsible for charges associated with any modifications to existing planning studies that are reasonably necessary to evaluate the impact of the Eligible Customer's request for service on the Transmission System.

(ii) If in response to multiple Eligible Customers requesting service in relation to the same competitive solicitation, a single System Impact Study is sufficient for the Transmission Provider to accommodate the service requests, the costs of that study shall be pro-rated among the Eligible Customers.

(iii) For System Impact Studies that the Transmission Provider conducts on its own behalf, the Transmission Provider shall record the cost of the System Impact Studies pursuant to Section 8.

32.3 System Impact Study Procedures: Upon receipt of an executed System Impact Study Agreement, the Transmission Provider will use Reasonable Efforts to complete the required System Impact Study within a sixty (60) day period. The System Impact Study shall identify (1) any system constraints, identified with specificity by transmission element or flowgate, (2) redispatch options (when requested by an Eligible Customer) including, to the extent possible, an estimate of the cost of redispatch, (3) available options for installation of automatic devices to curtail service (when requested by an Eligible Customer), and (4) additional Direct Assignment Facilities or Network Upgrades required to provide the requested service. For customers requesting the study of redispatch options, the System Impact Study shall (1) identify all resources located within the Transmission Provider's Control Area that can significantly contribute toward relieving the system constraint and (2) provide a measurement of each resource's impact on the system constraint. If the Transmission Provider possesses information indicating that any resource outside its Control Area could relieve the constraint, it shall identify each such resource in the System Impact Study. In the event that the Transmission Provider is unable to complete the required System Impact Study within such time period, it shall so notify the Eligible Customer and provide an estimated completion date along with an explanation of the reasons why additional time is required to complete the required studies. A copy of the completed System Impact Study and related work papers shall be made available to the Eligible Customer as soon as the System Impact Study is complete. The Transmission

Provider will use the same Reasonable Efforts in completing the System Impact Study for an Eligible Customer as it uses when completing studies for itself. The Transmission Provider shall notify the Eligible Customer immediately upon completion of the System Impact Study if the Transmission System will be adequate to accommodate all or part of a request for service or that no costs are likely to be incurred for new transmission facilities or upgrades. In order for a request to remain a Completed Application, within fifteen (15) days of completion of the System Impact Study the Eligible Customer must execute a Service Agreement or request service without an executed Service Agreement pursuant to Section 29.1, or the Application shall be deemed terminated and withdrawn.

32.4 Facilities Study Procedures: If a System Impact Study indicates that additions or upgrades to the Transmission System are needed to supply the Eligible Customer's service request, the Transmission Provider, within thirty (30) days of the completion of the System Impact Study, shall tender to the Eligible Customer a Facilities Study Agreement pursuant to which the Eligible Customer shall agree to advance funds to the Transmission Provider for performing the required Facilities Study. For a service request to remain a Completed Application, the Eligible Customer shall execute the Facilities Study Agreement and return it to the Transmission Provider within fifteen (15) days. If the Eligible Customer elects not to execute the Facilities Study Agreement, its Application shall be deemed withdrawn. Upon receipt of an executed Facilities Study Agreement, the Transmission Provider will use Reasonable Efforts to complete the required Facilities Study within a sixty (60) day period. If the Transmission Provider is unable to complete the Facilities Study in the allotted time period, the Transmission Provider shall notify the Eligible Customer and provide an estimate of the time needed to reach a final determination along with an explanation of the reasons that additional time is required to complete the study. When completed, the Facilities Study will include a good faith estimate of (i) the cost of Direct Assignment Facilities to be charged to the Eligible Customer, (ii) the Eligible Customer's appropriate share of the cost of any required Network Upgrades, and (iii) the time required to complete such construction and initiate the requested service. The Eligible Customer shall advance funds to the Transmission Provider for the construction of new facilities and such advance and construction shall be provided for in a separate agreement. If the construction of new facilities requires the expenditure of Transmission Provider funds, such construction shall be contingent upon the availability of appropriated funds. The Eligible Customer shall have thirty (30) days to execute a construction agreement and a Service Agreement and provide the advance payment or request service without an executed Service Agreement pursuant to Section 29.1 and pay the Transmission Customer's share of the costs or the request no longer will be a Completed Application and shall be deemed terminated and withdrawn and pursuant to section 29.2, the

Transmission Provider shall release the escrow fund or return the deposit, without interest. Any advance payment made by the Transmission Customer that is in excess of the costs incurred by the Transmission Provider shall be refunded.

32.5 Study Metrics: Section 19.10 defines the methodology used to calculate the percentage of non-affiliates' System Impact Studies and Facilities Studies processed outside the 60-day study completion deadlines using Reasonable Efforts under Part II of the Tariff. The same calculation applies to service under Part III of the Tariff.

32.6 Notice of Need for Environmental Review: If the Transmission Provider determines that environmental review is required in response to a request for service the Transmission Provider shall use Reasonable Efforts to tender an environmental review agreement within 15 Calendar Days of providing a System Impact Study report to Eligible Customer. Pursuant to such agreement or agreements, the Eligible Customer shall make advance payment of funds to the Transmission Provider for performing the environmental review, including review under the National Environmental Policy Act (NEPA), 42 U.S.C. § 4321, et seq., as amended. The agreement(s) shall also set forth Eligible Customer's responsibilities in connection with such environmental review. The Eligible Customer shall execute and return each environmental review agreement, along with the required study funds due upon execution as set forth in the agreement, to the Transmission Provider within 30 calendar days of receipt of the final version offered for execution. If an executed environmental review agreement(s) and the required funds are not provided in the manner set forth above, the application shall be deemed withdrawn and, pursuant to Section 17.3, its deposit shall be returned, without interest, or the release of its escrow funds authorized. In addition, if at any time prior to the issuance of Transmission Providers final NEPA decisional document the Eligible Customer fails to comply with the terms of the environmental review agreement, Transmission Provider reserves the right to deem the request for service withdrawn.

33 Load Shedding and Curtailments

33.1 Procedures: Prior to the Service Commencement Date, the Transmission Provider and the Network Customer shall establish Load Shedding and Curtailment procedures pursuant to the Network Operating Agreement with the objective of responding to contingencies on the Transmission System. The Parties will implement such programs during any period when the Transmission Provider determines that a system contingency exists and such procedures are necessary to alleviate such contingency. The Transmission Provider will notify all affected Network Customers in a timely manner of any scheduled Curtailment.

33.2 Transmission Constraints: During any period when the Transmission Provider determines that a transmission constraint exists on the Transmission System, and such constraint may impair the reliability of the Transmission Provider's system, the Transmission Provider will take whatever actions, consistent with Good Utility Practice, that are reasonably necessary to maintain the reliability of the Transmission Provider's system. To the extent the Transmission Provider determines that the reliability of the Transmission System can be maintained by redispatching resources, the Transmission Provider will initiate procedures pursuant to the Network Operating Agreement to redispatch all Network Resources and the Transmission Provider's own resources on a least-cost basis without regard to the ownership of such resources. Any redispatch under this section may not unduly discriminate between the Transmission Provider's use of the Transmission System on behalf of its Native Load Customers and any Network Customer's use of the Transmission System to serve its designated Network Load.

33.3 Cost Responsibility for Relieving Transmission Constraints: Whenever the Transmission Provider implements least-cost redispatch procedures in response to a transmission constraint, the Transmission Provider and Network Customers will each bear a proportionate share of the total redispatch cost based on their respective Load Ratio Shares.

33.4 Curtailments of Scheduled Deliveries: If a transmission constraint on the Transmission Provider's Transmission System cannot be relieved through the implementation of least-cost redispatch procedures and the Transmission Provider determines that it is necessary to Curtail scheduled deliveries, the Parties shall Curtail such schedules in accordance with the Network Operating Agreement.

33.5 Allocation of Curtailments: The Transmission Provider shall, on a non-discriminatory basis, Curtail the transaction(s) that effectively relieve the constraint. However, to the extent practicable and consistent with Good Utility Practice, any Curtailment will be shared by the Transmission Provider and Network Customer in proportion to their respective Load Ratio Shares. The Transmission Provider shall not direct the Network Customer to Curtail schedules to an extent greater than the Transmission Provider would Curtail the Transmission Provider's schedules under similar circumstances.

33.6 Load Shedding: To the extent that a system contingency exists on the Transmission Provider's Transmission System and the Transmission Provider determines that it is necessary for the Transmission Provider and the Network Customer to shed load, the Parties shall shed load in accordance with previously established procedures under the Network Operating Agreement.

33.7 System Reliability: Notwithstanding any other provisions of this Tariff, the Transmission Provider reserves the right, consistent with Good Utility Practice and on a not unduly discriminatory basis, to Curtail Network Integration Transmission Service without liability on the Transmission Provider's part for the purpose of making necessary adjustments to, changes in, or repairs on its lines, substations and facilities, and in cases where the continuance of Network Integration Transmission Service would endanger persons or property. In the event of any adverse condition(s) or disturbance(s) on the Transmission Provider's Transmission System or on any other system(s) directly or indirectly interconnected with the Transmission Provider's Transmission System, the Transmission Provider, consistent with Good Utility Practice, also may Curtail Network Integration Transmission Service in order to (i) limit the extent or damage of the adverse condition(s) or disturbance(s), (ii) prevent damage to generating or transmission facilities, or (iii) expedite restoration of service. The Transmission Provider will give the Network Customer as much advance notice as is practicable in the event of such Curtailment. Any Curtailment of Network Integration Transmission Service will be not unduly discriminatory relative to the Transmission Provider's use of the Transmission System on behalf of its Native Load Customers. The Transmission Provider shall specify the rate treatment and all related terms and conditions applicable in the event that the Network Customer fails to respond to established Load Shedding and Curtailment procedures.

34 Rates and Charges

The Network Customer shall pay the Transmission Provider for any Direct Assignment Facilities, Ancillary Services, and applicable study costs, consistent with Federal policy, along with the following:

34.1 Monthly Demand Charge: The Network Customer shall pay a monthly Demand Charge, which shall be determined by multiplying its Load Ratio Share times one twelfth (1/12) of the Transmission Provider's Annual Transmission Revenue Requirement specified in Schedule H.

34.2 Determination of Network Customer's Monthly Network Load: The Network Customer's monthly Network Load is its hourly load (including its designated Network Load not physically interconnected with the Transmission Provider under Section 31.3) coincident with the Transmission Provider's Monthly Transmission System Peak.

34.3 Determination of Transmission Provider's Monthly Transmission System Load: The Transmission Provider's monthly Transmission System load is the Transmission Provider's Monthly Transmission System Peak minus the coincident peak usage of all Long-Term Firm Point-To-Point Transmission

Service customers pursuant to Part II of this Tariff plus the Reserved Capacity of all Long-Term Firm Point-To-Point Transmission Service customers.

34.4 Redispatch Charge: The Network Customer shall pay a Load Ratio Share of any redispatch costs allocated between the Network Customer and the Transmission Provider pursuant to Section 33. To the extent that the Transmission Provider incurs an obligation to the Network Customer for redispatch costs in accordance with Section 33, such amounts shall be credited against the Network Customer's bill for the applicable month.

34.5 Stranded Cost Recovery: The Transmission Provider may seek to recover stranded costs from the Network Customer in a manner consistent with applicable Federal law and regulations.

35 Operating Arrangements

35.1 Operation under The Network Operating Agreement: The Network Customer shall plan, construct, operate and maintain its facilities in accordance with Good Utility Practice and in conformance with the Network Operating Agreement.

35.2 Network Operating Agreement: The terms and conditions under which the Network Customer shall operate its facilities and the technical and operational matters associated with the implementation of Part III of the Tariff shall be specified in the Network Operating Agreement. The Network Operating Agreement shall provide for the Parties to (i) operate and maintain equipment necessary for integrating the Network Customer within the Transmission Provider's Transmission System (including, but not limited to, remote terminal units, metering, communications equipment and relaying equipment), (ii) transfer data between the Transmission Provider and the Network Customer (including, but not limited to, heat rates and operational characteristics of Network Resources, generation schedules for units outside the Transmission Provider's Transmission System, interchange schedules, unit outputs for redispatch required under Section 33, voltage schedules, loss factors and other real time data), (iii) use software programs required for data links and constraint dispatching, (iv) exchange data on forecasted loads and resources necessary for long-term planning, and (v) address any other technical and operational considerations required for implementation of Part III of the Tariff, including scheduling protocols. The Network Operating Agreement will recognize that the Network Customer shall either (i) operate as a Control Area under applicable guidelines of the Electric Reliability Organization (ERO) as defined in 18 C.F.R. § 39.1 and the applicable regional reliability organization (RRO), (ii) satisfy its Control Area requirements, including all necessary Ancillary Services, by contracting with the Transmission Provider, or (iii) satisfy its Control Area requirements, including all necessary Ancillary

Services, by contracting with another entity, consistent with Good Utility Practice, which satisfies the applicable reliability guidelines of the ERO and the applicable RRO. The Transmission Provider shall not unreasonably refuse to accept contractual arrangements with another entity for Ancillary Services. The Network Operating Agreement is included in Attachment G.

35.3 Network Operating Committee: A Network Operating Committee (Committee) may be established to coordinate operating criteria for the Parties' respective responsibilities under the Network Operating Agreement. Each Network Customer shall be entitled to have at least one representative on the Committee. The Committee may meet from time to time as need requires.

SCHEDULE 1

Scheduling, System Control and Dispatch Service

This service is required to schedule the movement of power through, out of, within, or into a Control Area. This service can be provided only by the operator of the Control Area in which the transmission facilities used for transmission service are located. Scheduling, System Control and Dispatch Service is provided directly by the Transmission Provider if the Transmission Provider is the Control Area Operator or indirectly by the Transmission Provider making arrangements with the Control Area operator that performs this service for the Transmission Provider's Transmission System. The Transmission Customer must purchase this service from the Transmission Provider or the Control Area operator. The charges for Scheduling, System Control and Dispatch Service are to be based on the rates referred to below. To the extent the Control Area operator performs this service for the Transmission Provider, charges to the Transmission Customer are to reflect only a pass-through of the costs charged to the Transmission Provider by that Control Area operator.

The Transmission System specific charges for Scheduling, System Control and Dispatch Service are set forth in the appropriate rate schedule attached to and made part of the applicable Service Agreement. The rates or rate methodology used to calculate the charges for service under this schedule were promulgated and may be modified pursuant to applicable Federal laws, regulations and policies.

The Transmission Provider may modify the charges for Scheduling, System Control and Dispatch Service upon written notice to the Transmission Customer. Any change to the charges to the Transmission Customer for Scheduling, System Control and Dispatch Service shall be as set forth in a subsequent rate schedule promulgated pursuant to applicable Federal laws, regulations and policies and attached to and made part of the applicable Service Agreement. The Transmission Provider shall charge the Transmission Customer in accordance with the rate then in effect.

SCHEDULE 2

Reactive Supply and Voltage Control from Generation or Other Sources Service

In order to maintain transmission voltages on the Transmission Provider's transmission facilities within acceptable limits, generation facilities and non-generation resources capable of providing this service that are under the control of the Control Area operator are operated to produce or absorb reactive power. Thus, Reactive Supply and Voltage Control from Generation or Other Sources Service must be provided for each transaction on the Transmission Provider's transmission facilities. The amount of Reactive Supply and Voltage Control from Generation or Other Sources Service that must be supplied with respect to the Transmission Customer's transaction will be determined based on the reactive power support necessary to maintain transmission voltages within limits that are generally accepted in the region and consistently adhered to by the Transmission Provider.

Reactive Supply and Voltage Control from Generation or Other Sources Service can be provided directly by the Transmission Provider if the Transmission Provider is the Control Area operator or indirectly by the Transmission Provider making arrangements with the Control Area operator that performs this service for the Transmission Provider's Transmission System. The Transmission Customer must purchase this service from the Transmission Provider or the Control Area operator. The charges for such service will be based upon the rates referred to below. To the extent the Control Area operator performs this service for the Transmission Provider, charges to the Transmission Customer are to reflect only a pass-through of the costs charged to the Transmission Provider by the Control Area Operator.

The Transmission System specific charges for Reactive Supply and Voltage Control from Generation Sources Service are set forth in the appropriate rate schedule attached to and made part of the applicable Service Agreement. The rates or rate methodology used to calculate the charges for service under this schedule were promulgated and may be modified pursuant to applicable Federal laws, regulations and policies.

The Transmission Provider may modify the charges for Reactive Supply and Voltage Control from Generation Sources Service upon written notice to the Transmission Customer. Any change to the charges to the Transmission Customer for Reactive Supply and Voltage Control from Generation Sources Service shall be as set forth in a subsequent rate schedule promulgated pursuant to applicable Federal laws, regulations and policies and attached to and made part of the applicable Service Agreement. The Transmission Provider shall charge the Transmission Customer in accordance with the rate then in effect.

SCHEDULE 3

Regulation and Frequency Response Service

Regulation and Frequency Response Service is necessary to provide for the continuous balancing of resources, generation and interchange, with load and for maintaining scheduled interconnection frequency at sixty cycles per second (60 Hz). Regulation and Frequency Response Service is accomplished by committing on-line generation whose output is raised or lowered, predominantly through the use of automatic generating control equipment, and by other non-generation resources capable of providing this service as necessary to follow the moment-by-moment changes in load. The obligation to maintain this balance between resources and load lies with the Transmission Provider (or the Control Area operator that performs this function for the Transmission Provider). The Transmission Provider must offer this service when the transmission service is used to serve load within its Control Area. The Transmission Customer must either purchase this service from the Transmission Provider or make alternative comparable arrangements to satisfy its Regulation and Frequency Response Service obligation. The charges for Regulation and Frequency Response Service are referred to below. The amount of Regulation and Frequency Response Service will be set forth in the Service Agreement. To the extent the Control Area operator performs this service for the Transmission Provider, charges to the Transmission Customer are to reflect only a pass-through of the costs charged to the Transmission Provider by that Control Area operator.

The Transmission System specific charges for Regulation and Frequency Response Service are set forth in the appropriate rate schedule attached to and made part of the applicable Service Agreement. The rates or rate methodology used to calculate the charges for service under this schedule were promulgated and may be modified pursuant to applicable Federal laws, regulations and policies.

The Transmission Provider may modify the charges for Regulation and Frequency Response Service upon written notice to the Transmission Customer. Any change to the charges to the Transmission Customer for Regulation and Frequency Response Service shall be as set forth in a subsequent rate schedule promulgated pursuant to applicable Federal laws, regulations and policies and attached to and made part of the applicable Service Agreement. The Transmission Provider shall charge the Transmission Customer in accordance with the rate then in effect.

SCHEDULE 4

Energy Imbalance Service

Energy Imbalance Service is provided when a difference occurs between the scheduled and the actual delivery of energy to a load located within a Control Area over a single hour. The Transmission Provider must offer this service when the transmission service is used to serve load within its Control Area. The Transmission Customer must either obtain this service from the Transmission Provider or make alternative comparable arrangements, which may include use of non-generation resources capable of providing this service, to satisfy its Energy Imbalance Service obligation. To the extent the Control Area operator performs this service for the Transmission Provider, charges to the Transmission Customer are to reflect only a pass-through of the costs charged to the Transmission Provider by that Control Area operator.

The Transmission System specific compensation for Energy Imbalance Service is set forth in the appropriate rate schedule attached to and made part of the applicable Service Agreement. The rates or rate methodology used to calculate the charges for service under this schedule were promulgated and may be modified pursuant to applicable Federal laws, regulations and policies.

The Transmission Provider may modify the compensation for Energy Imbalance Service upon written notice to the Transmission Customer. Any change to the compensation to the Transmission Customer for Energy Imbalance Service shall be as set forth in a subsequent rate schedule promulgated pursuant to applicable Federal laws, regulations and policies and attached to and made part of the applicable Service Agreement. The Transmission Provider shall charge the Transmission Customer in accordance with the rate then in effect.

SCHEDULE 5

Operating Reserve - Spinning Reserve Service

Spinning Reserve Service is needed to serve load immediately in the event of a system contingency. Spinning Reserve Service may be provided by generating units that are on-line and loaded at less than maximum output and by non-generation resources capable of providing this service. The Transmission Provider must offer this service when the transmission service is used to serve load within its Control Area. The Transmission Customer must either purchase this service from the Transmission Provider or make alternative comparable arrangements to satisfy its Spinning Reserve Service obligation. The charges for Spinning Reserve Service are referred to below. The amount of Spinning Reserve Service will be set forth in the Service Agreement. To the extent the Control Area operator performs this service for the Transmission Provider, charges to the Transmission Customer are to reflect only a pass-through of the costs charged to the Transmission Provider by that Control Area operator.

The Transmission System specific charges for Operating Reserve - Spinning Reserve Service are set forth in the appropriate rate schedule attached to and made part of the applicable Service Agreement. The rates or rate methodology used to calculate the charges for service under this schedule were promulgated and may be modified pursuant to applicable Federal laws, regulations and policies.

The Transmission Provider may modify the charges for Operating Reserve - Spinning Reserve Service upon written notice to the Transmission Customer. Any change to the charges to the Transmission Customer for Operating Reserve - Spinning Reserve Service shall be as set forth in a subsequent rate schedule promulgated pursuant to applicable Federal laws, regulations and policies and attached to and made part of the applicable Service Agreement. The Transmission Provider shall charge the Transmission Customer in accordance with the rate then in effect.

SCHEDULE 6

Operating Reserve - Supplemental Reserve Service

Supplemental Reserve Service is needed to serve load in the event of a system contingency; however, it is not available immediately to serve load but rather within a short period of time. Supplemental Reserve Service may be provided by generating units that are on-line but unloaded, by quick-start generation or by interruptible load or other non-generation resources capable of providing this service. The Transmission Provider must offer this service when the transmission service is used to serve load within its Control Area. The Transmission Customer must either purchase this service from the Transmission Provider or make alternative comparable arrangements to satisfy its Supplemental Reserve Service obligation. The charges for Supplemental Reserve Service are referred to below. The amount of Supplemental Reserve Service will be set forth in the Service Agreement. To the extent the Control Area operator performs this service for the Transmission Provider, charges to the Transmission Customer are to reflect only a pass-through of the costs charged to the Transmission Provider by that Control Area operator.

The Transmission System specific charges for Operating Reserve - Supplemental Reserve Service are set forth in the appropriate rate schedule attached to and made part of the applicable Service Agreement. The rates or rate methodology used to calculate the charges for service under this schedule were promulgated and may be modified pursuant to applicable Federal laws, regulations and policies.

The Transmission Provider may modify the charges for Operating Reserve - Supplemental Reserve Service upon written notice to the Transmission Customer. Any change to the charges to the Transmission Customer for Operating Reserve - Supplemental Reserve Service shall be as set forth in a subsequent rate schedule promulgated pursuant to applicable Federal laws, regulations and policies and attached to and made part of the applicable Service Agreement. The Transmission Provider shall charge the Transmission Customer in accordance with the rate then in effect.

SCHEDULE 7

Long-Term Firm and Short-Term Firm Point-to-Point Transmission Service

The Transmission Customer shall compensate the Transmission Provider each month for Reserved Capacity pursuant to the Transmission System specific Firm Point-to-Point Transmission Service Rate Schedule attached to and made a part of the applicable Service Agreement. The rates or rate methodology used to calculate the charges for service under this schedule were promulgated and may be modified pursuant to applicable Federal laws, regulations and policies.

The Transmission Provider may modify the charges for Firm Point-to-Point Transmission Service upon written notice to the Transmission Customer. Any change to the charges to the Transmission Customer for Firm Point-to-Point Transmission Service shall be as set forth in a subsequent rate schedule promulgated pursuant to applicable Federal laws, regulations and policies and attached to and made part of the applicable Service Agreement. The Transmission Provider shall charge the Transmission Customer in accordance with the rate then in effect.

Discounts: Three principal requirements apply to discounts for transmission service as follows: (1) any offer of a discount made by the Transmission Provider must be announced to all Eligible Customers solely by posting on the OASIS, (2) any customer-initiated requests for discounts, including requests for use by one's wholesale merchant or an Affiliate's use, must occur solely by posting on the OASIS, and (3) once a discount is negotiated, details must be immediately posted on the OASIS. For any discount agreed upon for service on a path, from Point(s) of Receipt to Point(s) of Delivery, the Transmission Provider must offer the same discounted transmission service rate for the same time period to all Eligible Customers on all unconstrained transmission paths that go to the same point(s) of delivery on the Transmission System.

Resales: The rates and rules governing charges and discounts stated above shall not apply to resales of transmission service, compensation for which shall be governed by section 23.1 of the Tariff.

SCHEDULE 8

Non-Firm Point-To-Point Transmission Service

The Transmission Customer shall compensate the Transmission Provider for Non-Firm Point-to-Point Transmission Service pursuant to the Transmission System specific Non-Firm Point-to-Point Transmission Service Rate Schedule attached to and made a part of the applicable Service Agreement. The rates or rate methodology used to calculate the charges for service under this schedule were promulgated and may be modified pursuant to applicable Federal laws, regulations and policies.

The Transmission Provider may modify the charges for Non-Firm Point-to-Point Transmission Service upon written notice to the Transmission Customer. Any change to the charges to the Transmission Customer for Non-Firm Point-to-Point Transmission Service shall be as set forth in a subsequent rate schedule promulgated pursuant to applicable Federal laws, regulations and policies and attached to and made part of the applicable Service Agreement. The Transmission Provider shall charge the Transmission Customer in accordance with the rate then in effect.

Discounts: Three principal requirements apply to discounts for transmission service as follows: (1) any offer of a discount made by the Transmission Provider must be announced to all Eligible Customers solely by posting on the OASIS, (2) any customer-initiated requests for discounts, including requests for use by one's wholesale merchant or an Affiliate's use, must occur solely by posting on the OASIS, and (3) once a discount is negotiated, details must be immediately posted on the OASIS. For any discount agreed upon for service on a path, from Point(s) of Receipt to Point(s) of Delivery, the Transmission Provider must offer the same discounted transmission service rate for the same time period to all Eligible Customers on all unconstrained transmission paths that go to the same point(s) of delivery on the Transmission System.

Resales: The rates and rules governing charges and discounts stated above shall not apply to resales of transmission service, compensation for which shall be governed by section 23.1 of the Tariff.

SCHEDULE 9

Generator Imbalance Service

Generator Imbalance Service is provided when a difference occurs between the output of a generator located in the Transmission Provider's Control Area and a delivery schedule from that generator to (1) another Control Area or (2) a load within the Transmission Provider's Control Area over a single hour. The Transmission Provider must offer this service, to the extent it is physically feasible to do so from its resources or from resources available to it, when Transmission Service is used to deliver energy from a generator located within its Control Area. The Transmission Customer must either purchase this service from the Transmission Provider or make alternative comparable arrangements, which may include use of non-generation resources capable of providing this service, to satisfy its Generator Imbalance Service obligation. To the extent the Control Area operator performs this service for the Transmission Provider, charges to the Transmission Customer are to reflect only a pass-through of the costs charged to the Transmission Provider by that Control Area Operator.

The Transmission System specific compensation for Generator Imbalance Service is set forth in the appropriate rate schedule attached to and made part of the applicable Service Agreement. The rates or rate methodology used to calculate the charges for service under this schedule were promulgated and may be modified pursuant to applicable Federal laws, regulations and policies.

The Transmission Provider may modify the compensation for Generator Imbalance Service upon written notice to the Transmission Customer. Any change to the compensation to the Transmission Customer for Generator Imbalance Service shall be as set forth in a subsequent rate schedule promulgated pursuant to applicable Federal laws, regulations and policies and attached to and made part of the applicable Service Agreement. The Transmission Provider shall charge the Transmission Customer in accordance with the rate then in effect.

SCHEDULE 10

Unreserved Use Penalties

The Transmission System specific methodology for assessment of Unreserved Use Penalties is set forth in the appropriate rate schedule attached to and made part of the applicable Service Agreement. The rates or rate methodology used to calculate such penalties under this schedule were promulgated and may be modified pursuant to applicable Federal laws, regulations and policies.

The Transmission Provider may modify the methodology for assessment of Unreserved Use Penalties upon written notice to the Transmission Customer. Any change to that methodology shall be as set forth in a subsequent rate schedule promulgated pursuant to applicable Federal laws, regulations and policies and attached to and made part of the applicable Service Agreement. The Transmission Provider shall charge the Transmission Customer in accordance with the rate then in effect.

ATTACHMENT A

Service Agreement for
Firm Point-To-Point Transmission Service

1.0 This Service Agreement, dated as of _____, is entered into, by and between the (Region) of Western Area Power Administration (Transmission Provider), and _____ (Transmission Customer), each of whom are sometimes hereinafter individually called Party and both of whom are sometimes hereinafter collectively called the Parties. For purposes of this Service Agreement, the Transmission Provider's Transmission System consists of the applicable facilities described in Attachment K to the Tariff. The Transmission Provider may revise charges or losses for Firm Point-to-Point Transmission Service provided under this Service Agreement pursuant to applicable Federal Laws, regulations and policies upon written notice to the Transmission Customer.

2.0 The Transmission Customer has been determined by the Transmission Provider to have a Completed Application for Firm Point-To-Point Transmission Service under the Tariff.

3.0 The Transmission Customer has provided to the Transmission Provider a deposit and/or nonrefundable Application processing fee in accordance with the provisions of Section 17.3 of the Tariff.

4.0 Service under this agreement shall commence on the later of (1) the requested Service Commencement Date, or (2) the date on which construction of any Direct Assignment Facilities and/or Network Upgrades are completed, or (3) such other date as is mutually agreed. Service under this agreement shall terminate on _____. The Transmission Provider's acceptance of a rollover or renewal request is contingent upon, and in the sole discretion of the Transmission Provider may be limited by, the Transmission Provider's requirement to utilize capacity on its Transmission System in amounts necessary to meet statutory and contractual obligations to deliver Federal power to Project Use and Firm Electric Service customers of the Federal government. The Transmission Provider is presently aware of the following events that will impact and/or alter the capacity of its Transmission System and cause a limitation or denial of a rollover or renewal request: *(Each Region will add specific language into final service agreements detailing all known events that may affect transmission system capacity. Examples may include, but are not limited to: new Firm Electric Service Marketing Plans; status changes pertaining to Project Use and Firm Electric Service customers; and applications to join RTOs.)* Therefore, notwithstanding the provisions of Section 2.2 of the Tariff, prior to expiration of this Service Agreement, the Transmission Provider may in its sole discretion determine that a rollover or renewal would impair its ability to meet these Federal obligations. In such case, the Transmission Provider may not offer a

rollover or renewal of the Transmission Customer's transmission service in the amounts the Transmission Customer has reserved under this Service Agreement.

5.0 The Transmission Provider agrees to provide and the Transmission Customer agrees to take and pay for Firm Point-To-Point Transmission Service in accordance with the provisions of Part II of the Tariff, and this Service Agreement.

6.0 Any notice or request made to or by either Party regarding this Service Agreement shall be made to the representative of the other Party as indicated below.

Transmission Provider:

_____

_____

_____

Transmission Customer:

_____

_____

_____

Each Party may change the designation of its representative upon oral notice to the other, with confirmation of that change to be submitted in writing within ten (10) days thereafter.

7.0 The Tariff and, if applicable, the "Specifications For Long-Term Firm Point-To-Point Transmission Service", as presently constituted or as they may be revised or superseded, are incorporated herein and made a part hereof.

8.0 Power Factor: The Transmission Customer will be required to maintain a power factor between __-percent lagging and __-percent leading for all deliveries of capacity and energy to and from the Transmission Provider's Transmission System.

9.0 Transmission Losses

9.1 Loss Factors:

9.1.1 If, based on operating experience and technical studies, the Transmission Provider determines that any of the transmission loss factors on the Transmission Provider's Transmission System differs from the loss factors set forth in this Service Agreement, the Transmission Provider will notify the Transmission Customer of the

revised loss factor(s) pursuant to Section 1.0 of this Service Agreement.

9.1.2 Transmission Provider Transmission Loss Factor: Transmission Provider transmission losses shall initially be __% and shall be assessed on the power scheduled and transmitted to a point of delivery on the Transmission Provider's Transmission System.

10.0 Ancillary Services

10.1 Provided by Transmission Provider

10.1.1 Scheduling, System Control, and Dispatch Service
10.1.2 Reactive Supply and Voltage Control from Generation Sources Service

10.2 Provided by Transmission Customer

10.2.1 (To be filled in if applicable)
10.2.2

10.3 Provided by _____

10.3.1 (To be filled in if applicable)
10.3.2

11.0 Net Billing and Bill Crediting Option: The Parties have agreed to implement [Net Billing, Bill Crediting, both Net Billing and Bill Crediting, or neither Net Billing nor Bill Crediting] as set forth in Attachment J.

12.0 Charges for Service: Charges for Firm Point-to-Point Transmission Service and associated Ancillary Services shall be calculated in accordance with the applicable Rate Schedule(s) attached hereto and made a part of this Service Agreement. The rates or rate methodology used to calculate the charges for service under that schedule were promulgated and may be modified pursuant to applicable Federal laws, regulations and policies.

(The following section will be included as appropriate at the Transmission Providers discretion)

13.0 Independent System Operator: The Parties understand that the Transmission Provider may join an independent system operator under Commission jurisdiction. In the event the Transmission Provider either joins or is required to conform to protocols of the independent system operator, the Parties agree that the Transmission Provider either may (1) make any changes necessary to conform to the terms and conditions required by Commission approval of the independent system operator, or (2) terminate this Service Agreement by providing a one-year written notice to the Transmission Customer.

IN WITNESS WHEREOF, the Parties have caused this Service Agreement to be executed by their respective authorized officials.

WESTERN AREA POWER ADMINISTRATION

By _____

Title _____

Address _____

_____

Date _____

(TRANSMISSION CUSTOMER)

(SEAL)

By _____

Attest:

Title _____

By _____

Address _____

Title _____

_____

Date _____

Specifications For
Long-Term Firm Point-To-Point Transmission Service

1.0 Term of Transaction: _____
Start Date: _____
Termination Date: _____

2.0 Description of capacity and energy to be transmitted by Transmission Provider including the electric Control Area in which the transaction originates.
_____

3.0 Point(s) of Receipt: _____
Delivering Party: _____
Capacity Reservation: _____

4.0 Point(s) of Delivery: _____
Receiving Party: _____
Capacity Reservation: _____

5.0 The Maximum amount of capacity and energy to be transmitted (Reserved Capacity) is: _____

6.0 Designation of party(ies) subject to reciprocal service obligation:
_____
_____
_____

7.0 Name of the Control Area from which capacity and energy will be delivered to the Transmission Provider for Transmission Service:
_____

Name of the Control Area to which capacity and energy will be delivered by the Transmission Provider:
_____

Name(s) of any Intervening Systems providing transmission service:
_____
_____

8.0 Service under this Agreement may be subject to some combination of the charges detailed below. The appropriate charges for individual transactions will be determined in accordance with the terms and conditions of the Tariff.

8.1 Transmission Charge:

_____

8.2 System Impact and/or Facilities Study Charge(s):

_____

_____

8.3 Direct Assignment Facilities Charge:

_____

8.4 Ancillary Services Charges:

_____

_____

_____

_____

8.5 Redispatch Charges: To be filled in if applicable

8.6 Network Upgrade Charges: To be filled in if applicable

ATTACHMENT A-1

Service Agreement For
The Resale, Reassignment, Or Transfer Of
Point-To-Point Transmission Service

1.0 This Service Agreement, dated as of _____, is entered into, by and between the (Region) of Western Area Power Administration (Transmission Provider), and _____ (Assignee) , each of whom are sometimes hereinafter individually called Party and both of whom are sometimes hereinafter collectively called the Parties. For purposes of this Service Agreement, the Transmission Provider's Transmission System consists of the applicable facilities described in Attachment K to the Tariff.

2.0 The Assignee has been determined by the Transmission Provider to be an Eligible Customer under the Tariff pursuant to which the transmission service rights to be transferred were originally obtained.

3.0 The terms and conditions for the transaction entered into under this Service Agreement shall be subject to the terms and conditions of Part II of the Transmission Provider's Tariff and the terms and conditions of Service Agreement No. _____ between the Transmission Provider and the initial Reseller, except for the following terms and conditions negotiated by the Reseller of the reassigned transmission capacity (pursuant to Section 23.1 of this Tariff) and the Assignee: contract effective and termination dates, subject to the limitations on rollover or renewal requests set forth in Service Agreement No. _____ between the Transmission Provider and the initial Reseller; the amount of reassigned capacity or energy; Point(s) of Receipt and Delivery; and transmission service and other charges. Changes by the Assignee to the Reseller's Points of Receipt and Points of Delivery will be subject to the provisions of Section 23.2 of this Tariff.

4.0 The Transmission Provider shall continue to invoice the initial Reseller for Point-to-Point Transmission Service provided in accordance with the terms and conditions of Service Agreement No. _____ between the Transmission Provider and the initial Reseller. The Reseller and the Assignee shall negotiate and execute separate billing arrangements between themselves for the charges reflected in this Service Agreement or the associated OASIS schedule.

5.0 Any notice or request made to or by either Party regarding this Service Agreement shall be made to the representative of the other Party as indicated below.

Transmission Provider:

_____
_____
_____

Assignee:
_____
_____
_____

Each Party may change the designation of its representative upon oral notice to the other, with confirmation of that change to be submitted in writing within ten (10) days thereafter.

6.0 The Tariff, Service Agreement No. _____ between the Transmission Provider and the initial Reseller, and, if applicable, the "Specifications For The Resale, Reassignment Or Transfer of Long-Term Firm Point-To-Point Transmission Service," as presently constituted or as they may be revised or superseded, are incorporated herein and made a part hereof.

IN WITNESS WHEREOF, the Parties have caused this Service Agreement to be executed by their respective authorized officials.

WESTERN AREA POWER ADMINISTRATION

By _____

Title _____

Address _____

_____

Date _____

(ASSIGNEE)

(SEAL)

By _____

Attest:

Title _____

By _____

Address _____

Title _____

_____

Date _____

Specifications For The Resale, Reassignment Or Transfer of Long-Term Firm Point-To-Point Transmission Service

1.0 Term of Transaction: _____
Start Date: _____
Termination Date: _____

2.0 Description of capacity and energy to be transmitted by Transmission Provider including the electric Control Area in which the transaction originates.
_____

3.0 Point(s) of Receipt: _____
Delivering Party: _____

4.0 Point(s) of Delivery: _____
Receiving Party: _____

5.0 Maximum amount of reassigned capacity: _____

6.0 Designation of party(ies) subject to reciprocal service obligation:
_____
_____
_____
_____

7.0 Name of the Control Area from which capacity and energy will be delivered to the Transmission Provider for Transmission Service:
_____

Name of the Control Area to which capacity and energy will be delivered by the Transmission Provider:
_____

Name(s) of any Intervening Systems providing transmission service:
_____
_____

8.0 The Reseller and the Assignee have negotiated the charges detailed below in accordance with the terms and conditions of the Tariff, including the price cap specified in Section 23.1 of the Tariff.

8.1 Transmission Charge: _____
_____

8.2 System Impact and/or Facilities Study Charge(s):
_____
_____

8.3 Direct Assignment Facilities Charge:_____

8.4 Ancillary Services Charges: _____
_____
_____
_____
_____
_____
_____

9.0 Name of Reseller of the reassigned transmission capacity:
_____

ATTACHMENT B

Service Agreement for
Non-Firm Point-To-Point Transmission Service

1.0 This Service Agreement, dated as of _____, is entered into, by and between the (Region) of Western Area Power Administration (Transmission Provider), and _____ (Transmission Customer), each of whom are sometimes hereinafter individually called Party and both of whom are sometimes hereinafter collectively called the Parties. For purposes of this Service Agreement, the Transmission Provider's Transmission System consists of the applicable facilities described in Attachment K to the Tariff. The Transmission Provider may revise charges or losses for Non-Firm Point-to-Point Transmission Service provided under this Service Agreement pursuant to applicable Federal laws, regulations and policies upon written notice to the Transmission Customer.

2.0 The Transmission Customer has been determined by the Transmission Provider to be a Transmission Customer under Part II of the Tariff and has filed a Completed Application for Non-Firm Point-To-Point Transmission Service in accordance with Section 18.2 of the Tariff.

3.0 Service under this Service Agreement shall be provided by the Transmission Provider upon request by an authorized representative of the Transmission Customer. For purposes of this Service Agreement, the Transmission Provider's Transmission System consists of the facilities of the (Region) as described in Attachment K.

4.0 The Transmission Customer agrees to supply information the Transmission Provider deems reasonably necessary in accordance with Good Utility Practice in order for it to provide the requested service.

5.0 The Transmission Provider agrees to provide and the Transmission Customer agrees to take and pay for Non-Firm Point-To-Point Transmission Service in accordance with the provisions of Part II of the Tariff, and this Service Agreement.

6.0 Any notice or request made to or by either Party regarding this Service Agreement shall be made to the representative of the other Party as indicated below.

Transmission Provider:

_____
_____
_____

Transmission Customer:

_____
_____
_____

Each Party may change the designation of its representative upon oral notice to the other, with confirmation of that change to be submitted in writing within ten (10) days thereafter.

7.0 The Tariff as presently constituted or as it may be revised or superseded is incorporated herein and made a part hereof.

8.0 Power Factor: The Transmission Customer will be required to maintain a power factor between __-percent lagging and __-percent leading for all deliveries of capacity and energy to and from the Transmission Provider's Transmission System.

9.0 Transmission Losses:

9.1 Loss Factors:

9.1.1 If, based on operating experience and technical studies, the Transmission Provider determines that any of the transmission loss factors on the Transmission Provider's Transmission System differs from the loss factors set forth in this Service Agreement, the Transmission Provider will notify the Transmission Customer of the revised loss factor(s) pursuant to Section 1.0 of this Service Agreement.

9.1.2 Transmission Provider Transmission Loss Factor: Transmission Provider transmission losses shall initially be __% and shall be assessed on the power scheduled and transmitted to a point of delivery on the Transmission Provider's Transmission System.

10.0 Ancillary Services

10.1 Provided by Transmission Provider

10.1.1 Scheduling, System Control, and Dispatch Service
10.1.2 Reactive Supply and Voltage Control from Generation Sources Service

10.2 Provided by Transmission Customer

10.2.1 (To be filled in if appropriate)
10.2.2

10.3 Provided by _____

10.3.1 (To be filled in if appropriate)
10.3.2

11.0 Net Billing and Bill Crediting Option: The Parties have agreed to implement [Net Billing, Bill Crediting, both Net Billing and Bill Crediting, or neither Net Billing nor Bill Crediting] as set forth in Attachment J.

12.0 Charges for Service: Charges for Non-Firm Point-to-Point Transmission Service and associated Ancillary Services shall be calculated in accordance with the applicable Rate Schedules(s) attached hereto and made a part of this Service Agreement. The rates or rate methodology used to calculate the charges for service under that schedule were promulgated and may be modified pursuant to applicable Federal laws, regulations and policies.

[The following section will be included as appropriate at the Transmission Provider's discretion]

13.0 Independent System Operator: The Parties understand that the Transmission Provider may join an independent system operator under Commission jurisdiction. In the event the Transmission Provider either joins or is required to conform to protocols of the independent system operator, the Parties agree that the Transmission Provider either may (1) make any changes necessary to conform to the terms and conditions required by Commission approval of the independent system operator, or (2) terminate this Service Agreement by providing a one-year written notice to the Transmission Customer.

IN WITNESS WHEREOF, the Parties have caused this Service Agreement to be executed by their respective authorized officials.

WESTERN AREA POWER ADMINISTRATION

By _____

Title _____

Address _____

_____

Date _____

(TRANSMISSION CUSTOMER)

(SEAL)

By _____

Attest:

Title _____

By _____

Address _____

Title _____

_____

Date _____

ATTACHMENT C

Methodology to Assess Available Transfer Capability

Part I - Colorado River Storage Project Management Center, Desert Southwest Region, Rocky Mountain Region, and Sierra Nevada Region

(1) Detailed description of the specific mathematical algorithm used to calculate firm and non-firm ATC for scheduling, operating and planning horizons.

Scheduling Horizon

a. Firm ATC = TTC – TRM – ETC

b. Non-Firm ATC = TTC – TRM*Coef – ETC

Operating Horizon

a. Firm ATC = TTC – TRM – ETC

b. Non-Firm ATC = TTC – TRM*Coef – ETC

Planning Horizon

a. Firm ATC = TTC -- TRM - ETC

b. Non-Firm ATC = TTC - ETC

The Transmission Provider's ATC algorithms are also available on the Transmission Provider's OASIS website.

(2) A process flow diagram that illustrates the various steps through which ATC/AFC is calculated

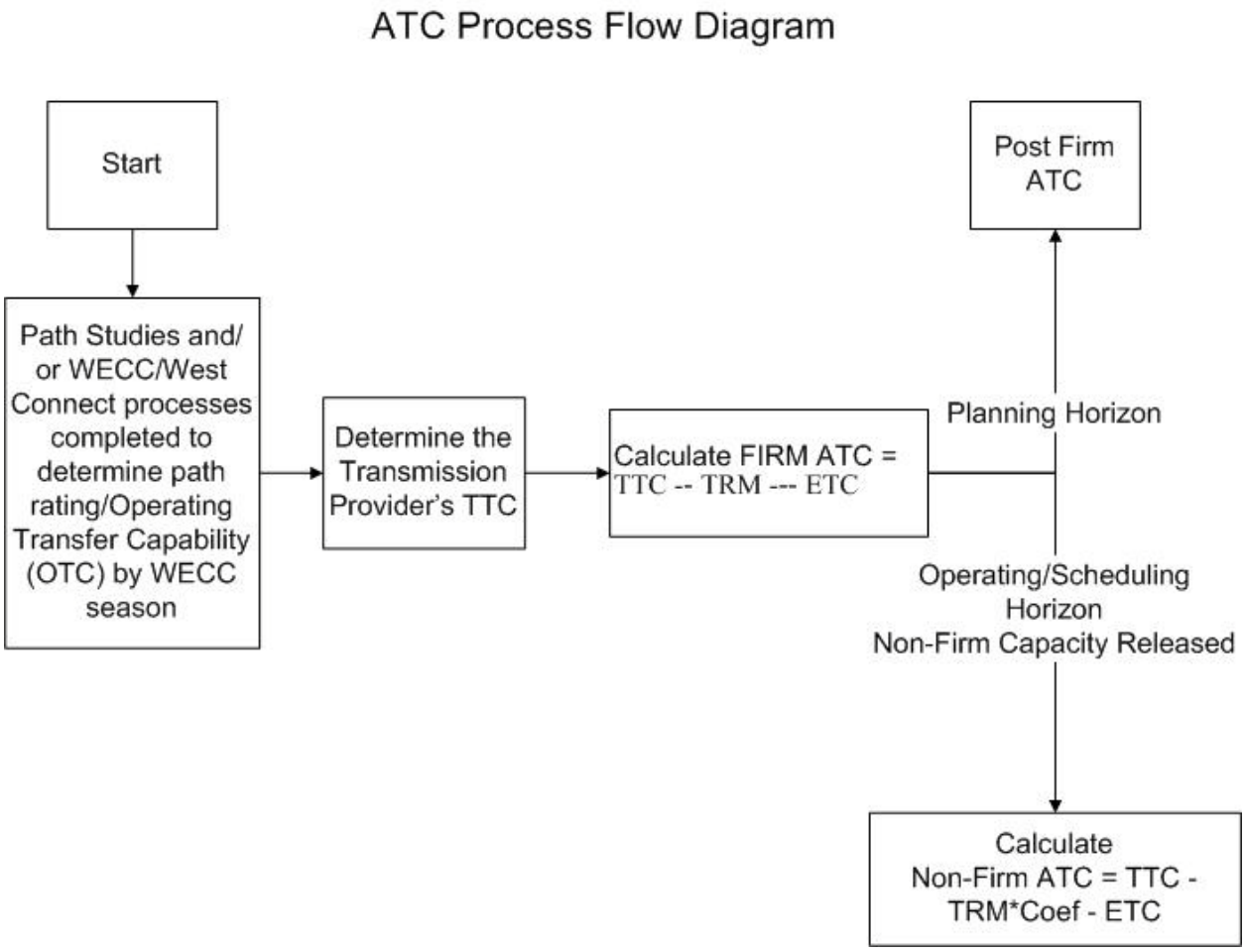

(3) Detailed explanation of how each of the ATC components is calculated for both the operating and planning horizons

a. For TTC:

i. Definition of TTC:

Total Transfer Capability (TTC): The amount of electric power that can be transferred over a specific path within the Transmission Provider's interconnected transmission network in a reliable manner while meeting all of a specific set of defined pre- and post- contingency system conditions. TTC is a variable quantity, dependent upon operating conditions in the near term and forecasted conditions in the long term. TTC shall be calculated consistent with the requirements of FERC, NERC and WECC as needed to represent system conditions, but no less frequently than seasonally. TTC cannot exceed the path rating.

ii. TTC calculation methodology.

- For transmission facilities that will affect the Western Interconnection, the determination of TTC is accomplished through the WECC Path Rating Process. The Transmission Provider follows the ATC methodology adopted by WECC and presented in the WECC Document Determination of Available Transfer Capability Within the Western Interconnection. Seasonal Operating Transfer Capability (OTC) studies are completed to determine the limit at which a transmission path can be operated at and still meet reliability requirement under an N-1 (single contingency) condition. The study results are reviewed and approved through WECC Operating Transfer Capability Planning Committee (OTCPC) regional processes.

- TTC is determined either prior to a new transmission component being brought into service or when a modification to a transmission component would affect the TTC.

- Once the TTC determination is made, it remains fixed and changes only if there is a physical or operational change to the transmission system or a transmission component which requires a change to TTC.

- When transmission facilities are jointly owned, the capacity is allocated among the owners based on the joint ownership or participation agreement; therefore, the TTC of the jointly owned facilities will be based upon the capacity allocated to each Transmission Provider.

- If a WECC defined path must be separated into components to properly allow for the commercial use of the path and its components, the components' TTCs will be based on the same studies used to determine the path OTC or the thermal rating of the components. The sum of the components' TTCs will not exceed the path OTC.

- For internal constraints, the net of local load and local generation may be used to determine TTC and/or ATC.

- Narratives explaining changes to monthly and/or yearly TTC are posted on the Transmission Provider's OASIS.

iii. List of databases used in TTC assessments:

The Transmission Provider utilizes the NERC and WECC contract path methodology to determine TTC on its transmission system. The

determination of the TTC for paths on the Transmission Provider system is segment dependent. However, the tools used to determine TTC is the same for all segments, i.e., the GE PSLF powerflow and stability programs using system modeling data obtained through WECC.

iv. Assumptions used in TTC assessments:

Paths with established transfer capabilities will not be evaluated unless there is a valid reason for doing so, such as a component change or new configuration, which could affect the transfer capability. Should a change in a WECC rated path warrant restudying, the required studies for the path will be performed through the WECC Path Rating Process. Should a change in a non-WECC rated path warrant restudying, the required studies for the path will follow the WECC rated path methodology, but not be brought through the WECC Path Rating Process. However, the study process will be performed through the applicable Regional or SubRegional Planning group.

b. For ETC:

i. Definition of ETC.

Existing Transmission Commitments (ETC): ETC is transmission that is already committed for use.

There are four types of committed uses: 1) native load uses; 2) existing commitments for purchase/exchange/deliveries/sales;3) existing commitments for transmission service (Pre-Order 888, Post-Order 888, Point-to-Point and Network); and 4) other pending potential uses of transfer capability (non-confirmed Transmission Service Requests). The Transmission Provider determines ETC as the total of all contracts using a contract path methodology.

ii. Explanation of calculation methodology used to determine the transmission capacity to be set aside for native load and non-OATT customers:

The Transmission Service Provider shall determine the impact of firm ETCs based on the following inputs:

- The transmission capability utilized in serving Firm Electric Service, congressionally mandated power deliveries to Transmission Provider's preference customers from the Federally owned generating plants.

- The impact of Firm Network Integration Transmission Service serving Load, to include Load forecast error and losses not otherwise included in TRM.

- The impact of grandfathered firm Transmission Service agreements and bundled contracts for energy and transmission, where executed prior to the effective date of a Transmission Provider's Open Access Transmission Tariff or Safe Harbor Tariff accepted by FERC.

- The impact of Firm Point-to-Point Transmission Service.

- The impact of any Ancillary Services not otherwise included in TRM,

- Post-backs of redirected or released Firm services.

- The impact of any other services, contracts, or agreements not specified above using transmission that serves Firm Electric Service or Firm Network Integration Transmission Service.

iii. How point to point transmission service requests are incorporated.

Point-to-point type contracts are modeled using the specified megawatt quantity, point of receipt, point of delivery, and contract term.

iv. How rollover rights are accounted for:

Currently a component does not exist to maintain rollover rights for existing transmission customers past the current stop date/time. Requests for the posted ATC by other customers are held until the existing right holder exercises those rights to rollover.

v. Processes for ensuring that non-firm capacity is released properly:

The Transmission Provider uses an Offset value to account for unused transmission capacity which has not been scheduled (tagged) including the impact of netting schedules in the opposite direction. A portion of the unused capacity is added to the non-firm ATC formula, thus increasing the ATC posting on OASIS. Due to uncertainty nature of this process and to prevent over-posting and subsequent curtailment of schedules, the Transmission Provider uses larger value of Offset for the immediate hours than several hours in the future.

c. If a Transmission Provider uses an AFC methodology to calculate ATC, it shall. (i) explain its definition of AFC; (ii) explain its AFC calculation methodology, (iii) explain its process for converting AFC into ATC for OASIS posting, (iv) list the

databases used in its AFC assessments; and (v) explain the assumptions used in its AFC assessments regarding load levels, generation dispatch, and modeling of planned and contingency outages.

The Transmission Provider does not use an AFC methodology to calculate ATC.

d. For TRM:

i. Definition of TRM:

Transmission Reliability Margin (TRM): The amount of transmission transfer capability necessary to provide reasonable assurance that the interconnected transmission network will be secure, TRM accounts for the inherent uncertainty in system conditions and the need for operating flexibility to ensure reliable system operation as system conditions change.

ii. TRM calculation methodology:

The Transmission Provider currently reserves TRM to support the activation of operating reserves via participation in Rocky Mountain Reserve Sharing Group and/or Southwest Reserve Sharing Group. The Transmission Provider's obligation to deliver reserves is calculated at a minimum of twice a year by the Reserve Sharing Group. In addition, the Transmission Provider may include an additional transmission capacity to account for its network customers load forecast error and at certain paths to account for unscheduled flow..

iii. Databases used in TRM assessments:

The Transmission Provider uses a value between 0 to 1 for TRM Coefficient to release a portion of the capacity reserved under TRM as non-firm. The Transmission Provider uses its scheduling system, PI, and SCADA, WECC bases cases, and PSS E or GE PSLF in its calculation of TRM.

iv. Conditions under which the Transmission Provider uses TRM:

The Transmission Provider may use TRM for any of the following:

- Transmission necessary for the activation of operating reserves;
- Unplanned transmission outages;
- Simultaneous limitations associated with operating under a nomogram;

- Loading variations due to balancing of generation and load;
- Uncertainty in load distribution and/or load forecast;
- Allowanced for unscheduled flow.

e. For CBM:

i. Identification of the entity who performs the resource adequacy for CBM determination:

The Transmission Provider does not utilize CBM.

ii. The methodology used to perform the generation reliability assessment:

The Transmission Provider has established CBM of zero on all transmission paths when calculating ATC.

iii. Explanation of whether the assessment method reflects a specific regional practice:

The Transmission Provider has established CBM of zero on all transmission paths when calculating ATC.

iv. Assumptions used in this assessment:

The Transmission Provider has established CBM of zero on all transmission paths when calculating ATC.

v. Basis for the selection of paths on which CBM is set aside:

The Transmission Provider has established CBM of zero on all transmission paths when calculating ATC.

f. Additionally for CBM:

i. Explain definition of CBM:

The transmission Provider has established CBM of zero on all transmission paths when calculating ATC.

ii. List of databases used in CBM calculations:

The Transmission Provider does not use any databases in its CBM calculation,

iii. Demonstration that there is no double-counting of outages when performing CBM, TTC and TRM calculations:

Since the Transmission Provider has established CBM as zero on all transmission paths, the Transmission Provider can't double count for outages.

g. Procedures for allowing use of CBM during emergencies (with explanation of what constitutes an emergency, entities that are permitted to use CBM during emergencies and procedure which is followed by the Transmission Provider's merchant function and other load-serving entities when they need to access CBM:

At this time, the Transmission Provider's Network Customers have not requested CBM set aside, therefore the Transmission Provider does not have CBM set aside.

Part II - Upper Great Plains Region

The Transmission Provider must include, at a minimum, the following information concerning its ATC calculation methodology:

(1) A detailed description of the specific mathematical algorithm used to calculate firm and non-firm ATC (and AFC, if applicable) for its scheduling horizon (same day and real-time), operating horizon (day ahead and pre-schedule) and planning horizon (beyond the operating horizon);

The Transmission Provider utilizes the Mid-Continent Area Power Pool ("MAPP") procedures for calculating firm and non-firm ATC for those Control Area to Control Area and Controlled Interface contract paths expected to be constraining to sales of transmission service and for calculating all firm and non-firm AFC. The rated system path methodology (contract path) is utilized for contract paths between the UGPR system and other Transmission Providers with whom UGPR has interconnections and for Controlled Interfaces.

UGPR's Controlled Interfaces are those transmission facilities or tie-lines included in its Transmission System where the flow of power across such facilities is controlled to a desired value utilizing a High Voltage Direct Current (HVDC) technology or a phase-shifting transformer. The Controlled Interfaces included in UGPR's Transmission System include: 1) the Miles City Converter Station, which is a 200MW back-to-back HVDC tie-line located in its Miles City 230-kV Substation in eastern Montana; 2) the east-side AC transmission connection to the Rapid City DC Tie, which is a 200MW back-to-back HVDC tie-line located in western South Dakota; 3) the 300 MVA Crossover

phase-shifter located on the Crossover-Yellowtail 230-kV transmission line located in eastern Montana, and 4) the Tioga-Boundary Dam 230-kV transmission tie-line between the United States and Saskatchewan, which is controlled by a 200 MVA phase-shifting transformer owned by SaskPower and located at the north end of the transmission line in SaskPower's Boundary Dam 230-kV Substation.

The network response flowgate methodology (network AFC) is utilized for the Transmission Provider's system for facilities expected to be constraining to sales of transmission service and expected to be congested in real-time operations.

The MAPP region, including the Transmission Provider's system, utilizes two horizons for AFC/ATC calculations:

- The Operating Horizon AFC/ATC calculation evaluates hourly non-firm and secondary non-firm service. The Operating Horizon AFC/ATC calculation determines AFC/ATC values for a sliding 36-hour period. The Operating Horizon includes the "scheduling horizon" (same day and real-time) as well as the "operating horizon" (day ahead and pre-schedule) as such terms are referred to in the FERC Order No. 890.

- The Planning Horizon AFC/ATC calculation evaluates transmission service with a NERC curtailment priority of 3 or higher except for secondary non-firm service. The Planning Horizon AFC/ATC calculation determines AFC/ATC values for a sliding 3 year period beyond the Operating Horizon.

Appendix F of MAPP's document "MAPP Policies and Procedures for Transmission Operations" (MAPP Policies and Procedures) contains the detailed mathematical algorithms used to calculate firm and non-firm AFC/ATC. A summary of the mathematical algorithms is provided below.

a. Non-Recallable (Firm) AFC

Under the MAPP AFC process, non-recallable AFC represents firm AFC. The MAPP formula for Non-recallable AFC is available at:

http://toinfo.oasis.mapp.org/oasisinfo/afc_calculation.pdf

Under this formula, Non-recallable AFC is Total Flowgate Capability reduced by: (i) the capacity benefit margin (CBM); (ii) the transmission reliability margin (TRM); (iii) the non-recallable Existing Transmission Commitments (ETC); and (iv) non-recallable transmission reservation impacts.

b. Recallable (Non-Firm) AFC

Under the MAPP AFC process, recallable AFC represents non-firm AFC. The MAPP formula for Recallable AFC is available at:

http://toinfo.oasis.mapp.org/oasisinfo/afc_calculation.pdf

Under this formula, Recallable AFC is Total Flowgate Capability reduced by: (i) CBM; (ii) TRM; (iii) Recallable Existing Transmission Commitments; (iv) Non-Recallable transmission reservation impacts; (v) Non-Recallable Existing Transmission Commitments; (vi) Recallable transmission reservation impacts.

c. Non-recallable ATC Computation on a Contract Path

Non-recallable ATC on a contract path is the TTC on the contract path reduced by: (i) CBM, (ii) TRM, (iii) Non-Recallable Existing Transmission Commitments, and (iv) Non-Recallable Transmission Reservation Impacts on the path.

d. Recallable ATC Computation on a Contract Path

Recallable ATC for a MAPP Transmission Provider Flowgate is the TTC reduced by: (i) CBM; (ii) TRM; (iii) Recallable Existing Transmission Commitments; (iv) Non-Recallable transmission reservation impacts; (v) Non-Recallable Existing Transmission Commitments; (vi) Recallable transmission reservation impacts.

(2) A process flow diagram that illustrates the various steps through which ATC/AFC is calculation; and

The process flow diagram of the steps involved in calculating ATC/AFC is provided as Appendix 1 to this Attachment C-2.

(3) A detailed explanation of how each of the ATC components is calculated for both the operating and planning horizons.

a. For TTC, a Transmission Provider shall: (i) explain its definition of TTC; (ii) explain its TTC calculation methodology; (iii) list the databases used in its TTC assessments; and (iv) explain the assumptions used in its TTC assessments regarding load levels, generation dispatch, and modeling of planned and contingency outages.

With respect to requirement 3(a)(i), UGPR defines TTC as follows:

For UGPR Control Area to Control Area contract paths:

The TTC is defined as the sum of the seasonal normal facility ratings of the tie lines between the UGPR Control Area and the other Control Area with whom UGPR has an interconnection. The Control Area to Control Area contract path TTC is determined separately for each adjoining Control Area. The seasonal normal facility rating is determined in accordance with the UGPR Transmission Facility Ratings Methodology (as posted on the UGPR OASIS page).

For UGPR Controlled Interface contract paths:

The TTC is defined as the seasonal normal facility rating of the HVDC line (in each direction), or the seasonal normal facility rating of the phase-shifting transformer (in each direction).

For UGPR flowgates:

For Outage Transfer Distribution Factor ("OTDF") flowgates, the TTC is defined as the seasonal emergency facility rating of the limiting facility. The seasonal emergency facility rating is determined in accordance with the UGPR Transmission Facility Ratings Methodology (as posted on the UGPR OASIS page).

For Power Transfer Distribution Factor ("PTDF") flowgates where the limiting phenomenon is stability related, the TTC is defined as the flow on the monitored facilities above which the limiting phenomenon no longer meets criteria.

With respect to requirement 3(a)(ii), UGPR's TTC calculation methodology is:

For UGPR Control Area to Control Area contract paths:

The TTC is calculated as the sum of the seasonal normal facility ratings of the tie lines between the UGPR Control Area and the other Control Area with whom UGPR has an interconnection. For tie-lines that are jointly-owned, only the UGPR ownership share of the tie-line capacity is included. The Control Area to Control Area contract path TTC is determined separately for each adjoining Control Area. The seasonal normal facility rating is determined in accordance with the UGPR Transmission Facility Ratings Methodology (as posted on the UGPR OASIS page).

For UGPR Controlled Interface contract paths:

The TTC is calculated as the lesser of the seasonal normal facility rating of the HVDC line (in each direction) or the flow on the HVDC line (in each direction) above which the limiting phenomenon (i.e. thermal, voltage angle, or stability

related) no longer meets criteria. The TTC is calculated as the lesser of the seasonal normal facility rating of the phase-shifting transformer (in each direction) or the flow on the phase-shifting transformer (in each direction) above which the limiting phenomenon (i.e. thermal, voltage angle, or stability related) no longer meets criteria.

Power flow simulations are performed to determine the flow on the monitored facilities at which the UGPR Transmission Planning Criteria (as posted on the UGPR OASIS) are not met. Stability simulations are performed, if applicable, to determine the flow on the monitored facilities at which the UGPR Transmission Planning Criteria (as posted on the UGPR OASIS) are not met. If applicable, in the case of a voltage angle related limit, power flow simulations are performed to determine the flow on the monitored facilities at which a line outage results in a breaker angle differential at which, when the breaker is reclosed, the instantaneous generator response of the most critical generators is such that its delta-power reaches its maximum safe limit (generator shaft torque is within the limits of the generator)

For UGPR flowgates:

For OTDF flowgates, the TTC is calculated as equal to the seasonal emergency facility rating of the limiting facility. The seasonal emergency facility rating is determined in accordance with the UGPR Transmission Facility Ratings Methodology (as posted on the UGPR OASIS page).

For PTDF flowgates where the limiting phenomenon is voltage angle or stability related, the TTC is calculated as equal to the flow on the monitored facilities above which the limiting phenomenon no longer meets criteria. Stability simulations are performed to determine the flow on the monitored facilities at which the UGPR Transmission Planning Criteria (as posted on the UGPR OASIS) are not met. In the case of a voltage angle related limit, power flow simulations are performed to determine the flow on the monitored facilities at which a line outage results in a breaker angle differential at which, when the breaker is reclosed, the instantaneous generator response of the most critical generators is such that its delta-power reaches its maximum safe limit (generator shaft torque is within the limits of the generator).

The methodologies and studies used to determine TTC for each flowgate in the MAPP Region are reviewed and sanctioned through the MAPP Regional Transmission Committee (RTC).

With respect to requirement 3(a)(iii), the databases used in UGPR's TTC assessments are:

For thermal limitations, the seasonal normal and emergency facility ratings and impedance data for UGPR's transmission equipment are documented in internal spreadsheets and provided to MAPP, and to UGPR's Reliability Coordinator, the Midwest ISO, for real-time operations and long-term planning and model development purposes.

For stability limitations, MAPP maintains a database of generator and other equipment modeling data which are used in stability simulations. The North Dakota Export (NDEX) flowgate that is jointly owned by UGPR is limited by stability considerations. For voltage angle limitations, transmission line relaying synchro-check settings may be maintained by MAPP transmission owners in a computer-aided protection engineering computer database. MAPP transmission owners may also use generator shaft torque fatigue capabilities that are developed on an as-needed basis by generator manufacturers.

UGPR considers the information in these databases to be Critical Energy Infrastructure Information ("CEII").

With respect to requirement 3(a)(iv), the assumptions used in TTC assessments regarding load levels, generation dispatch, and modeling of planned and contingency outages are:

For Control Area to Control Area contract paths:

Load levels, generation dispatch and planned and contingency outages are not considered in determining the TTC.

For Controlled Interface contract paths:

For Controlled Interface contract paths where the limiting phenomenon is stability related, in accordance with MAPP practice, load levels for the entire MAPP area are modeled at 100% and 85% of peak summer load for summer studies and 100% and 90% of peak winter loads for winter studies. Load levels internal to the stability limited NDEX and other interdependent northern MAPP flowgates are modeled according to MAPP practice for stability simulations. Such modeling of load levels is appropriate for stability simulations because load can be a damping influence on angular instability. Generators in the electrical vicinity of the stability issue are typically dispatched at their maximum outputs in order to provide for a high level of acceleration power to appropriately analyze angular instability. Planned and contingency outages are analyzed in accordance with the UGPR Transmission Planning Criteria (as posted on the UGPR OASIS).

For Controlled Interface contract paths where the limiting phenomenon is voltage angle related, the TTC is dependent on the relative interaction between the voltage differential across an open breaker and the resultant generator shaft torque response relative to the maximum safe limits of the generator. Generation

dispatch may be a significant factor with respect to the critical generator (in terms of the generator most sensitive to a delta power fluctuation in excess of its maximum safe shaft torque) and other generators electrically near the critical generator. The critical generator is dispatched at its minimum dispatch level in the power flow simulations because that is the appropriate assumption for a delta power analysis. To the extent that other marginal generators (generators that may or may not be on-line in real-time due to their dispatch costs) are on-line in the base case models, such generators are either taken off-line or dispatched down to minimum output. This assumption results in the critical machine participating to a greater extent in the delta power analysis. Planned and contingency outages are not currently considered in determining the TTC for voltage angle related limitations.

For Controlled Interface contract paths where the limiting phenomenon is thermal loading related, summer load levels are used in the determination of summer season TTC and winter load levels are used in the determination of winter TTC. Generation dispatch is not considered in determining the TTC. Planned and contingency outages of a monitored facility or another facility in the immediate vicinity of a monitored facility are considered in the determination of the TTC. Typically, the posted TTC is based on a system intact (no outages) assumption. During times of outages of facilities near the monitored facilities, the TTC is based on the outage condition.

For flowgates:

For OTDF flowgates, the TTC is only dependent on the facility rating. Load levels, generation dispatch and planned and contingency outages are not considered in determining the TTC.

For PTDF flowgates where the limiting phenomenon is stability related, in accordance with MAPP practice, load levels for the entire MAPP area are modeled at 100% and 85% of peak summer load for summer studies and 100% and 90% of peak winter loads for winter studies. Load levels internal to the stability limited NDEX and other non-UGPR owned interdependent northern MAPP flowgates are modeled according to MAPP practice for stability simulations. Such modeling of load levels is appropriate for stability simulations because load can be a damping influence on angular instability. Generators in the electrical vicinity of the stability issue are typically dispatched at their maximum outputs in order to provide for a high level of acceleration power to appropriately analyze angular instability. Planned and contingency outages are analyzed in accordance with the UGPR Transmission Planning Criteria (as posted on the UGPR OASIS).

For PTDF flowgates where the limiting phenomenon is voltage angle related, the TTC is dependent on the relative interaction between the voltage differential

across an open breaker and the resultant generator shaft torque response relative to the maximum safe limits of the generator. Generation dispatch may be a significant factor with respect to the critical generator (in terms of the generator most sensitive to a delta power fluctuation in excess of its maximum safe shaft torque) and other generators electrically near the critical generator. The critical generator is dispatched at its minimum dispatch level in the power flow simulations because that is the appropriate assumption for a delta power analysis. To the extent that other marginal generators (generators that may or may not be on-line in real-time due to their dispatch costs) are on-line in the base case models, such generators are either taken off-line or dispatched down to minimum output. This assumption results in the critical machine participating to a greater extent in the delta power analysis. Planned and contingency outages are not currently considered in determining the TTC for voltage angle related limitations.

For PTDF flowgates where the limiting phenomenon is thermal loading related, summer load levels are used in the determination of summer season TTC and winter load levels are used in the determination of winter TTC. Generation dispatch is not considered in determining the TTC. Planned and contingency outages of a monitored facility or another facility in the immediate vicinity of a monitored facility are considered in the determination of the TTC. Typically, the posted TTC is based on a system intact (no outages) assumption. During times of outages of facilities near the monitored facilities, the TTC is based on the outage condition.

b. For ETC, a transmission provider shall explain: (i) its definition of ETC; (ii) the calculation methodology used to determine the transmission capacity to be set aside for native load (including network load), and non-OATT customers including, if applicable, an explanation of assumptions on the selection of generators that are modeled in service); (iii) how point-to-point transmission service requests are incorporated; (iv) how rollover rights are accounted for; and (v) its processes for ensuring that non-firm capacity is released properly (e.g., when real time schedules replace the associated transmission service requests in its real-time calculations); and (vi) describe the step-by-step modeling study methodology and criteria for adding or eliminating flowgates (permanent and temporary).

With respect to requirement 3(b)(i), within the MAPP region the ETC value is used to account for committed use of a flowgate or contract path other than transmission reservations made after November 1, 1996. For flowgates, ETC accounts for the impacts on a flowgate due to load serving and grandfathered transmission commitments. For contract paths, ETC accounts for grandfathered transmission commitments. ETC used in firm AFC/ATC calculations includes the effect of only firm transmission commitments, and may reflect flows expected under the most limiting conditions for a given time period. ETC used in non-firm AFC/ATC calculations includes the effects of firm transmission commitments, and may reflect average conditions for a given time period.

With respect to requirement 3(b)(ii), the Planning Horizon flowgate ETC value is comprised of several components including:

- MAPP Transmission Provider Generation-to-Load Impacts. These impacts are calculated as follows:

    - MAPP Transmission Providers upload, on a daily basis, hourly control area load forecasts for the next seven days and, on a monthly basis, monthly load forecasts for the next 36 months. For UGPR, the load forecast information correlates to the UGPR native load forecast with an adjustment to account for the non-IS loads within UGPR's load balancing area. The adjustment is based on historical average ratios of UGPR native load to total control area load.

    - MAPP Transmission Providers supply designated network resource lists for all generators in the control area. For load serving entities within the UGPR Control Area that are not network integration transmission service customers, UGPR relies on data supplied by these entities through the annual MAPP model building process.

    - MAPP Transmission Providers supply joint-owned generator information. This information includes information concerning the joint owners and the transmission arrangements for delivering joint owned shares to the joint owners.

    - MAPP Transmission Providers supply control area generating unit merit order (block loading) information. The merit order information is used to develop the generation dispatch to serve the load in the Transmission Provider's control area. To the extent resources outside the UGPR Control Area are used to serve load in the UGPR Control Area, these deliveries are represented by the transmission service requests on OASIS, except for generators directly connected to the UGPR system through UGPR transmission facilities. In these cases, the resource us represented in the merit order file and UGPR's share of the resource is not reflected in the calculation of the adjoining control area's generation to load impacts.

    - MAPPCOR calculates, for each MAPP flowgate including UGPR flowgates, the generation to load impacts of each MAPP Transmission Provider serving load within its control area. MAPP's calculation is based on determining a generation dispatch for each applicable time horizon. The dispatch is based on dispatching generation in merit order up to the designated network resource limits, respecting joint-ownership shares of jointly owned units, until the load plus net interchange are balanced for each control area. The calculation includes the effects of generation and transmission outages included in the

NERC System Data Exchange (SDX). Further details of MAPP's calculation can be found in Section 6.1 of Appendix F to the latest version of the MAPP Policies and Procedures which can be found at the MAPP OASIS Information Page at http://toinfo.oasis.mapp.org/oasisinfo/. The Policies and Procedures are listed under the "Business Practices" area.

- Centralized Dispatch Market Flow Impacts. The MAPP process can accept flow information from centralized dispatch markets. Such flow information is required to be provided by the Midwest ISO in the Interconnected Operations and Congestion Management Service Agreement ("Seams Agreement") under the Midwest ISO tariff between UGPR and the Midwest ISO. UGPR utilizes MAPPCOR as its Contract Manager under the Seams Agreement. The flow information is provided for all MAPP Transmission Provider flowgates that meet the coordination requirements in the Congestion Management Process described in the Seams Agreement. The market flow impacts seek to represent the parallel flow on the applicable flowgates based on economic dispatch simulations of the expected market dispatch for various time frames.

- Other Third Party Generation-to-Load Impacts. For third party transmission providers not accounted for under the above processes, MAPPCOR utilizes generation block loading files and load forecasts from the NERC SDX to calculate the control area load parallel flow impacts from non-MAPP and non-MISO transmission providers on each MAPP Transmission Provider flowgate. Further details of MAPP's calculation can be found Section 6.1 of Appendix F in the latest version of the MAPP Policies and Procedures, which can be found at the MAPP OASIS Information Page at http://toinfo.oasis.mapp.org/oasisinfo/. The Policies and Procedures are listed under the "Business Practices" area.

The Operating Horizon flowgate ETC value is calculated by MAPP for each MAPP Transmission Provider flowgate. MAPP forecasts flows and ETC on MAPP Transmission Provider flowgates for each hour of the Operating Horizon using historical flow information and reported energy schedules. The forecasting algorithm used by MAPP utilizes a weighted average of metered flows from previous hours and comparable hours from previous days. Further details of MAPP's calculation of Operating Horizon ETC can be found in Section 6.2 of Appendix F to the latest version of the MAPP Policies and Procedures, which can be found at the MAPP OASIS Information Page at http://toinfo.oasis.mapp.org/oasisinfo/. The Policies and Procedures are listed under the "Business Practices" area.

UGPR considers the data used in calculating ETC to be Critical Energy Infrastructure Information ("CEII").

With respect to requirement 3(b)(iii), MAPPCOR calculates the point-to-point transmission service request impacts for MAPP Transmission Provider flowgates. In

addition to MAPP reservations, MAPPCOR downloads OASIS reservations from the Midwest ISO, PJM and SPP OASIS nodes. The reservations are filtered according to certain filtering criteria in order to avoid double-counting reservations. MAPPCOR then utilizes source/sink information from these reservations (to the extent available) or Point-of-Receipt / Point-of-Delivery information to calculate the impacts of the reservations on each MAPP Transmission Provider flowgate. Impacts of reservations in the forward direction (flows additive to the flowgate flows) and in the reverse direction (flows counterflow to the flowgate flows) are calculated for the operating and planning horizons. Further details of MAPP's calculation can be found in the latest version of Section 11 of Appendix F to the MAPP Policies and Procedures, which can be found at the MAPP OASIS Information Page at http://toinfo.oasis.mapp.org/oasisinfo/. The Policies and Procedures are listed under the "Business Practices" area.

With respect to requirement 3(b)(iv), roll-over rights of MAPP Transmission Provider reservations are accounted for in the calculation of ATC/AFC. Absent any indication to the contrary from the MAPP Transmission Providers, it is assumed that each long-term firm transmission service reservation has rights of first refusal (roll-over rights). In like fashion, since UGPR has a seams agreement with MISO in which both parties have agreed to take into account the roll-over rights of the other party, MISO long-term firm transmission service requests are assumed to have roll over rights unless MISO advises otherwise. The roll-over rights of the MAPP and MISO reservations are reflected in the ATC/AFC calculation by the creation of a TSN in the OASIS system. A TSN is treated the same as a reservation in the calculation of impacts. The TSN utilizes the same source/sink and POR/POD as the parent reservation and thus the impacts of the roll-over rights are calculated in the same way as the impacts of the parent reservation. Further details of MAPP's calculation of the roll-over rights can be found in Section 13 of Appendix F to the latest version of the MAPP Policies and Procedures, which can be found at the MAPP OASIS Information Page at http://toinfo.oasis.mapp.org/oasisinfo/. The Policies and Procedures are listed under the "Business Practices" area.

With respect to requirement 3(b)(v), the process for ensuring that non-firm capacity is released properly (e.g., when real time schedules replace the associated transmission service requests in real-time calculations) are fully detailed in the MAPP Policies and Procedures. In summary of those procedures, MAPP calculates short-term non-firm AFC for the Operating Horizon by considering known energy schedules for all reservations except hourly non-firm reservations. For hourly non-firm reservations, the reservation amount is used if no schedule has been submitted. If a NERC e-tag has been submitted for hourly non-firm service, the amount on the e-tag is used in the calculation. Details concerning the non-firm AFC calculation can be found in the latest version of Section 6.2 of Appendix F to the MAPP Policies and Procedures, which can be found at the MAPP OASIS Information Page at http://toinfo.oasis.mapp.org/oasisinfo/. The Policies and Procedures are listed under the "Business Practices" area.

With respect to requirement 3(b)(vi), the step-by-step modeling study methodology and criteria for adding or eliminating flowgates (permanent and temporary) are as follows.

The Transmission Provider develops flowgates for facilities expected to be constraining to sales of transmission service and expected to be congested in real-time operations. The Transmission Provider follows MAPP's requirements for adding or removing flowgates as outlined in Section 5.2.1 of Appendix F to the MAPP Policies and Procedures, which can be found at the MAPP OASIS Information Page at http://toinfo.oasis.mapp.org/oasisinfo/.

Under the MAPP procedures, approval is required from the Transmission Operating Subcommittee (TOS) and the Transmission Schedules and Compensation Subcommittee (TSCSC) under the MAPP Regional Transmission Committee (RTC) for any new MAPP Transmission Provider flowgates in the MAPP Request Evaluation process. Under the MAPP procedures, a change in the definition of an existing MAPP Transmission Provider flowgate is considered a new flowgate and requires the above approvals.

MAPP's procedures with regard to temporary flowgates are similar to the procedures for permanent flowgates except that approval of the Chairs of the TOS and TSCSC is acceptable in lieu of approval by the committees as a whole. Temporary flowgates are developed for facilities expected to be congested in real-time operations due to unforeseen operational conditions such as short-term conditions due to planned or forced outages. In such cases, temporary flowgates are modeled for the time-frames of the expected unusual operating conditions and then are removed from operation upon restoration of the Transmission System to its normal state.

c. If a Transmission Provider uses an AFC methodology to calculate ATC, it shall: (i) explain its definition of AFC; (ii) explain its AFC calculation methodology; (iii) explain its process for converting AFC into ATC for OASIS posting; (iv) list the databases used in its AFC assessments; and (v) explain the assumptions used in its AFC assessments regarding load levels, generation dispatch, and modeling of planned and contingency outages.

UGPR utilizes the MAPP procedures for calculating firm and non-firm ATC and AFC. UGPR utilizes the rated system path methodology (contract path) for contract paths between the UGPR system and other Control Areas with whom UGPR has interconnections. UGPR utilizes the network response flowgate methodology (network AFC) for facilities expected to be constraining to sales of transmission service and expected to be congested in real-time operations.

With respect to requirement 3(c)(i), the term "flowgate" refers to a transmission facility(s) on which flow has been correlated with a limiting phenomenon (thermal loading, transient stability, voltage stability or voltage angle). The AFC values posted for identified flowgates is the Available Flowgate Capability on a set of physical transmission facilities, rather than a Control Area to Control Area transfer capability.

Flowgates can be defined as Power Transfer Distribution Factor ("PTDF") or Outage Transfer Distribution Factor ("OTDF").

OTDF flowgates measure the system intact flow on a limiting facility (called the "monitored element") and calculate (by a network response analysis) how much flow from a contingent facility will flow on the limiting facility should an outage of the contingent facility occur. OTDF flowgates are typically only used where the limiting phenomenon is thermal loading on the limiting facility.

PTDF flowgates measure flow for conditions with the transmission system intact and are typically used where the limiting phenomenon is stability or voltage angle related or for thermal loading issues where the limiting facility and the contingent facility are both extra high voltage facilities (e.g., 345 kV lines).

UGPR flowgates include both OTDF and PTDF flowgates.

With respect to requirement 3(c)(ii), UGPR utilizes the MAPP region AFC calculation methodology. In summary, AFC is calculated as the Total Flowgate Capability (referred to as the "TFC" or, equivalently, the "TTC") less CBM less TRM less ETC less transmission service reservation impacts. Detailed information regarding the algorithms used by MAPP for calculating firm and non-firm ATC/AFC is available at: http://toinfo.oasis.mapp.org/oasisinfo/afc_calculation.pdf.

In addition, as part of the Seams Agreement between the UGPR and the Midwest ISO, the MAPP region also calculates Available Share of Total Flowgate Capability ("ASTFC"). The calculation of ASTFC is in accordance with the regional process of allocation of flowgate capability between MAPP and MISO (as well as between other Reciprocal Entities such as PJM, SPP, and TVA). The details of the MAPP's calculation of ASTFC can be found in Section 14 of Appendix F to the latest version of the MAPP Policies and Procedures, which can be found at the MAPP OASIS Information Page at http://toinfo.oasis.mapp.org/oasisinfo/. The Policies and Procedures are listed under the "Business Practices" area.

With respect to requirement 3(c)(iii), MAPP does not presently convert AFC into ATC. Within the MAPP region, ATC is utilized for contract path limitations and AFC is utilized for specific transmission facilities expected to be constraining to sales of transmission service and expected to be congested in real-time operations. Within the MAPP region, both an ATC evaluation and an AFC evaluation are performed for every request for transmission service. After NERC develops rules within the MOD-001 standard for converting AFC into ATC, MAPP will comply with the NERC rules. While MAPP does not convert its AFC values into ATC values, the MAPP Scenario Analyzer is available on the MAPP OASIS to evaluate AFC impacts on ATC on a Control Area to Control Area contract path.

With respect to requirement 3(c)(iv), the databases utilized in AFC assessments are broken down into two areas. First, the databases utilized by UGPR to develop the data inputs it supplies to MAPP for flowgate AFC calculations are the same as those listed in

the response to requirement (iii) under Item 3(a) above (for the TTC calculation), as well as those listed in the response to requirement (ii) under 3(b) above (for the ETC calculation) and the data bases listed in the response to requirement 3(d) below (for the TRM calculation). Second, the databases utilized by MAPP in performing the AFC calculation after having been provided the MAPP Transmission Provider data inputs are described in Appendix F to the latest version of the MAPP Policies and Procedures, which can be found at the MAPP OASIS Information Page at http://toinfo.oasis.mapp.org/oasisinfo/. The Policies and Procedures are listed under the "Business Practices" area.

UGPR considers the information in these databases to be Critical Energy Infrastructure Information ("CEII").

With respect to requirement 3(c)(v), the assumptions used in AFC assessments regarding load levels, generation dispatch, and modeling of planned and contingency outages are the same as those listed in the response to requirement (iv) under Item 3(a) above (for the TTC calculation), as well as those listed in the response to requirement (ii) under 3(b) above (for the ETC calculation) and the assumptions listed in the response to requirement 3 (d) below (for the TRM calculation).

d. For TRM, a Transmission Provider shall explain: (i) its definition of TRM; (ii) its TRM calculation methodology (e.g., its assumptions on load forecast errors, forecast errors in system topology or distribution factors and loop flow sources); (iii) the databases used in its TRM assessments; (iv) the conditions under which the transmission provider uses TRM. A Transmission Provider that does not set aside transfer capability for TRM must so state.

With respect to requirement 3(d)(i), within MAPP, TRM is defined as the Transmission Reliability Margin. TRM provides a reserve that ensures the reliability of the interconnected transmission network. TRM accounts for the inherent uncertainty associated with TTC, ETC and ATC/AFC calculations, and the need for operating flexibility to ensure reliable system operation as system conditions change.

With respect to requirement 3(d)(ii), UGPR calculates TRM in accordance with MAPP policies and methodologies. The nature of interfaces dictates how TRM is calculated. MAPP's TRM calculation methodology for flowgates includes the following sub-components, which are described below:

- General Uncertainty. ATC/AFC calculations utilize many assumptions and projections of system conditions, which may include such items as transmission system topology, projected customer demand and its distribution, generation dispatch, future weather conditions, and parallel path flows. Therefore, calculations of future TTC and AFC values must consider the inherent uncertainties in projecting such system parameters over longer time periods. Consistent with MAPP region policies

for flowgates, UGPR sets the general uncertainty component of TRM at a value equal to 2% of the flowgate TTC. The 2% value is reasonable based on the many uncertainties discussed above.

- Delivery of Operating Reserves. The operating reserve component of the TRM is defined within MAPP to be the amount of transmission capability on a flowgate required to provide the amount of operating reserves associated with 100% of the greatest single generator contingency impacting the flowgate in the direction of the constraint. For UGPR, the greatest generator outage affecting each flowgate is determined by studying the effect of tripping various generators within the MAPP region and dispatching generators within each Midwest Contingency Reserve Sharing Group ("MCRSG") member's area to reflect their share of the operating reserves required to be delivered to replace the output of the generator that tripped. The generator outages are analyzed with the contingent facility out of service. The greatest generator outage affecting the flowgate is the outage that results in the greatest incremental flow over the flowgate. The highest incremental flow on the flowgate is the amount of TRM required to deliver operating reserves.

- Interdependency of Interfaces. The difference between TTC values developed using simultaneous and non-simultaneous study procedures and the related interdependency of interfaces may be handled by computing a variable TRM. This applies to the North Dakota Export (NDEX) interface.

Within MAPP, the release of TRM on a non-firm basis is allowed provided the flowgate can be operated in compliance with NERC standards. UGPR releases TRM for non-firm AFC postings in three ways. First, the uncertainty sub-component is removed from the TRM for non-firm AFC postings. The removal of the general uncertainty component is appropriate for non-firm AFC postings because non-firm service can be curtailed prior to interrupting firm transmission service. Second, the TRM sub-component related to reserve sharing is reduced to 60% for non-firm ATC postings. This is appropriate because MAPP requires that 40% of the operating reserve must be delivered immediately via spinning reserves and the other 60% must be delivered via fast-start units to be provided within 30-60 minutes. Non-firm curtailments would be expected to be effective before the fast-start 60% portion of the operating reserves needs to be delivered. Third, the TRM sub-component related to TTC values developed using simultaneous and non-simultaneous study procedures is reduced to allow for selling of non-firm capacity identified in a non-simultaneous study; provided that the Transmission Provider has coordinated a procedure for posting of non-firm capability above the simultaneous limit with other affected Transmission Providers.

The methodologies and studies used to determine TRM for each flowgate in the MAPP Region are reviewed and sanctioned through the MAPP Regional Transmission Committee (RTC).

With respect to requirement 3(d)(iii), the databases utilized in TRM assessments include the flowgate TTCs (for the general uncertainty sub-component) and the MCRSG requirements as documented in spreadsheets maintained by the MCRSG and MAPP power flow models, both used for the operating reserve delivery calculation. MAPP, including UGPR, considers the information in these databases to be Critical Energy Infrastructure Information ("CEII").

With respect to requirement 3(d)(iv), TRM is utilized for all firm and non-firm flowgate AFC calculations. 100% of the TRM value is utilized for firm flowgate AFC calculations. Portions of the TRM are released for non-firm flowgate AFC calculations as discussed in the response to requirement 3(d)(ii) above. TRM is not utilized for contract path ATC calculations.

e. For CBM, the Transmission Provider shall include a specific and self-contained narrative explanation of its CBM practice, including: (i) an identification of the entity who performs the resource adequacy analysis for CBM determination; (ii) the methodology used to perform generation reliability assessments (e.g., probabilistic or deterministic); (iii) an explanation of whether the assessment method reflects a specific regional practice; (iv) the assumptions used in this assessment; and (v) the basis for the selection of paths on which CBM is set aside.

UGPR does not include CBM on any of its contract paths or flowgates. These requirements are therefore not applicable to UGPR and no response is provided.

f. In addition, for CBM, a Transmission Provider shall: (i) explain its definition of CBM; (ii) list the databases used in its CBM calculations; and (iii) demonstrate that there is no double-counting of contingency outages when performing CBM, TTC, and TRM calculations.

UGPR does not include CBM on any of its contract paths or flowgates. These requirements are therefore not applicable to UGPR and no response is provided.

g. The Transmission Provider shall explain its procedures for allowing the use of CBM during emergencies (with an explanation of what constitutes an emergency, the entities that are permitted to use CBM during emergencies and the procedures which must be followed by the transmission providers' merchant function and other load-serving entities when they need to access CBM). If the Transmission Provider's practice is not to set aside transfer capability for CBM, it shall so state.

UGPR does not include CBM on any of its contract paths or flowgates. These requirements are therefore not applicable to UGPR and no response is provided.

(4) An explanation of the process for coordinating ATC calculations with neighboring systems.

MAPP and the Transmission Provider coordinate ATC calculations with neighboring systems in a number of ways:

- MAPP utilizes the coordination procedures outlined in the Seams Agreement between UGPR and the Midwest ISO. Under that agreement:

    - Flowgates are subjected to a number of tests to determine if the flowgate will be reciprocally coordinated between entities subject to the Congestion Management Process (as such term is used in the Seams Agreement) which entities include not only the Midwest ISO but also PJM, SPP and TVA.

    - MAPP monitors in its evaluation of transmission service requests all flowgates for which it is deemed to be reciprocal. MAPP does not calculate the AFC for these flowgates but rather uses the values provided by the owner of the flowgate.

    - MAPP provides AFC values for all MAPP flowgates to the other reciprocal entities to the various seams agreements. Those entities then monitor the MAPP flowgates in their evaluations of transmission service.

    - MAPP makes its reservations available to other parties for their use in calculating reservation impacts on their flowgates.

    - As discussed in the response to 3(b)(ii), the MAPP process can accept flow information from adjoining centralized dispatch markets. In the case of the Midwest ISO, the flow information is provided for all MAPP Transmission Provider flowgates that meet the coordination requirements in the Congestion Management Process described in the Seams Agreement.

    - As discussed in the response to 3(b)(iii), MAPP downloads OASIS reservations from the Midwest ISO, PJM and SPP OASIS nodes. MAPP includes these reservations in its calculation of point-to-point transmission service request impacts for MAPP Transmission Provider flowgates.

    - As discussed in the response to 3(b)(iv), MAPP and the Midwest ISO have agreed to take into account the roll-over rights of the other party.

    - As discussed in the response to 3(c)(ii), the MAPP region also calculates Available Share of Total Flowgate Capability ("ASTFC"). The calculation of ASTFC is in accordance with the regional process of allocation of flowgate capability between MAPP and MISO (as well as between other Reciprocal Entities such as PJM, SPP, and TVA).

- The Transmission Provider coordinates its calculation of TTC with neighboring systems such that the appropriate facility ratings of the tie-lines are used for setting the Control Area to Control Area contract path TTC. For flowgates that involve tie-lines with other entities, UGPR utilizes the appropriate facility ratings in the determining the flowgate TFC.

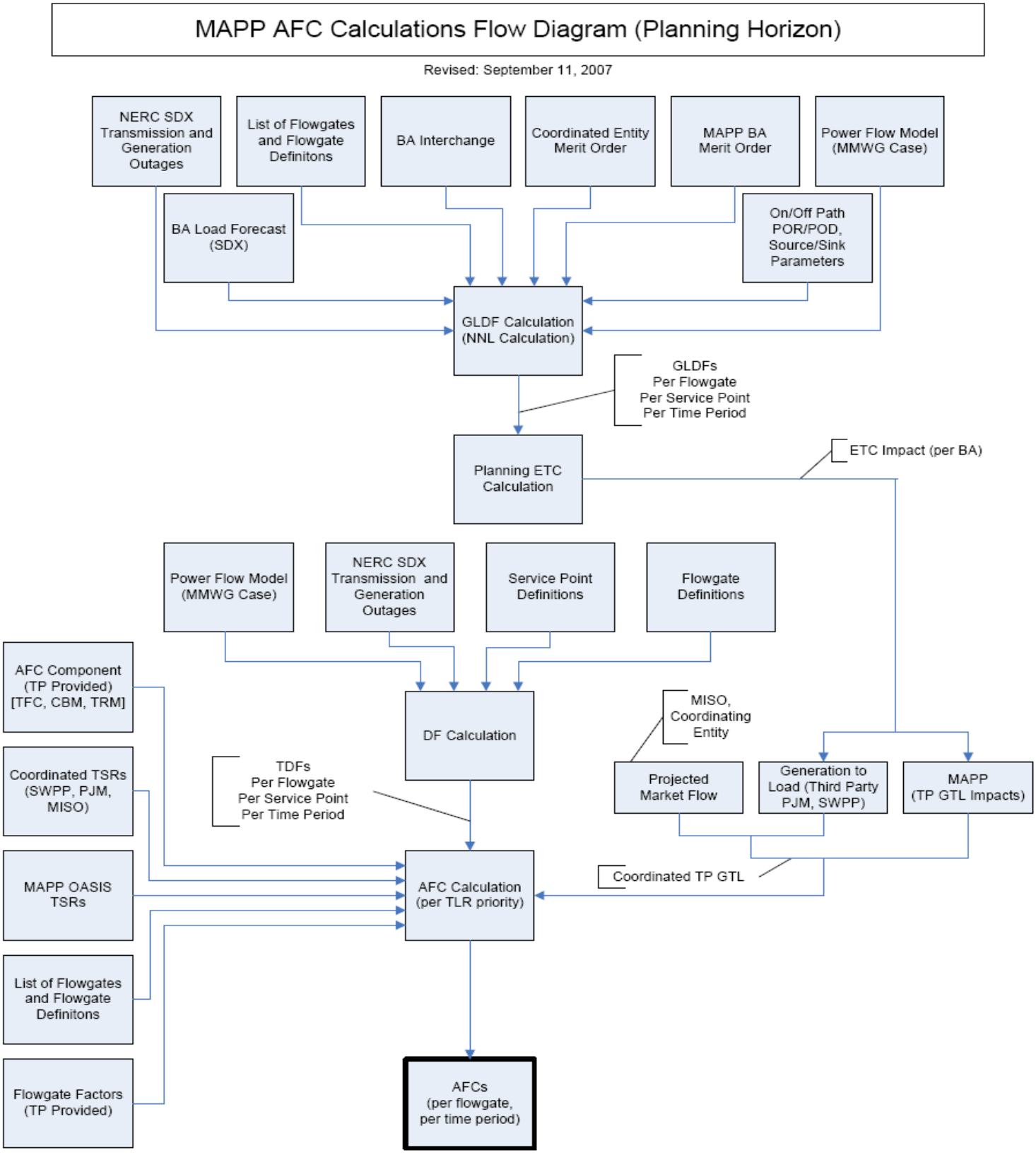
MAPP AFC Calculations Flow Diagram (Planning Horizon)
Revised: September 11, 2007
NERC SDX Transmission and Generation Outages
List of Flowgates and Flowgate Definitons
BA Interchange
Coordinated Entity Merit Order
MAPP BA Merit Order
Power Flow Model (MMWG Case)
BA Load Forecast (SDX)
On/Off Path POR/POD, Source/Sink Parameters
GLDF Calculation (NNL Calculation)
GLDFs Per Flowgate Per Service Point Per Time Period
Planning ETC Calculation
ETC Impact (per BA)
Power Flow Model (MMWG Case)
NERC SDX Transmission and Generation Outages
Service Point Definitions
Flowgate Definitions
AFC Component (TP Provided) [TFC, CBM, TRM]
DF Calculation
MISO, Coordinating Entity
Coordinated TSRs (SWPP, PJM, MISO)
TDFs Per Flowgate Per Service Point Per Time Period
Projected Market Flow
Generation to Load (Third Party PJM, SWPP)
MAPP (TP GTL Impacts)
MAPP OASIS TSRs
AFC Calculation (per TLR priority)
Coordinated TP GTL
List of Flowgates and Flowgate Definitons
Flowgate Factors (TP Provided)
AFCs (per flowgate, per time period)

MAPP ATC Calculations Flow Diagram (Planning Horizon)

Revised: September 11, 2007

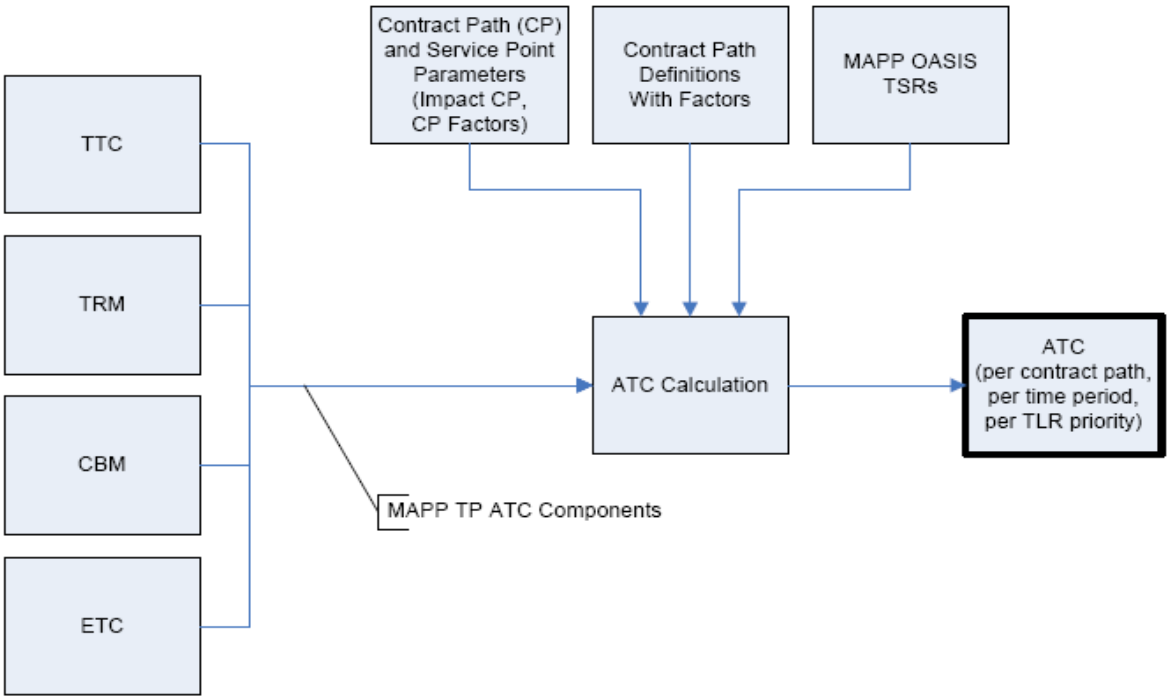

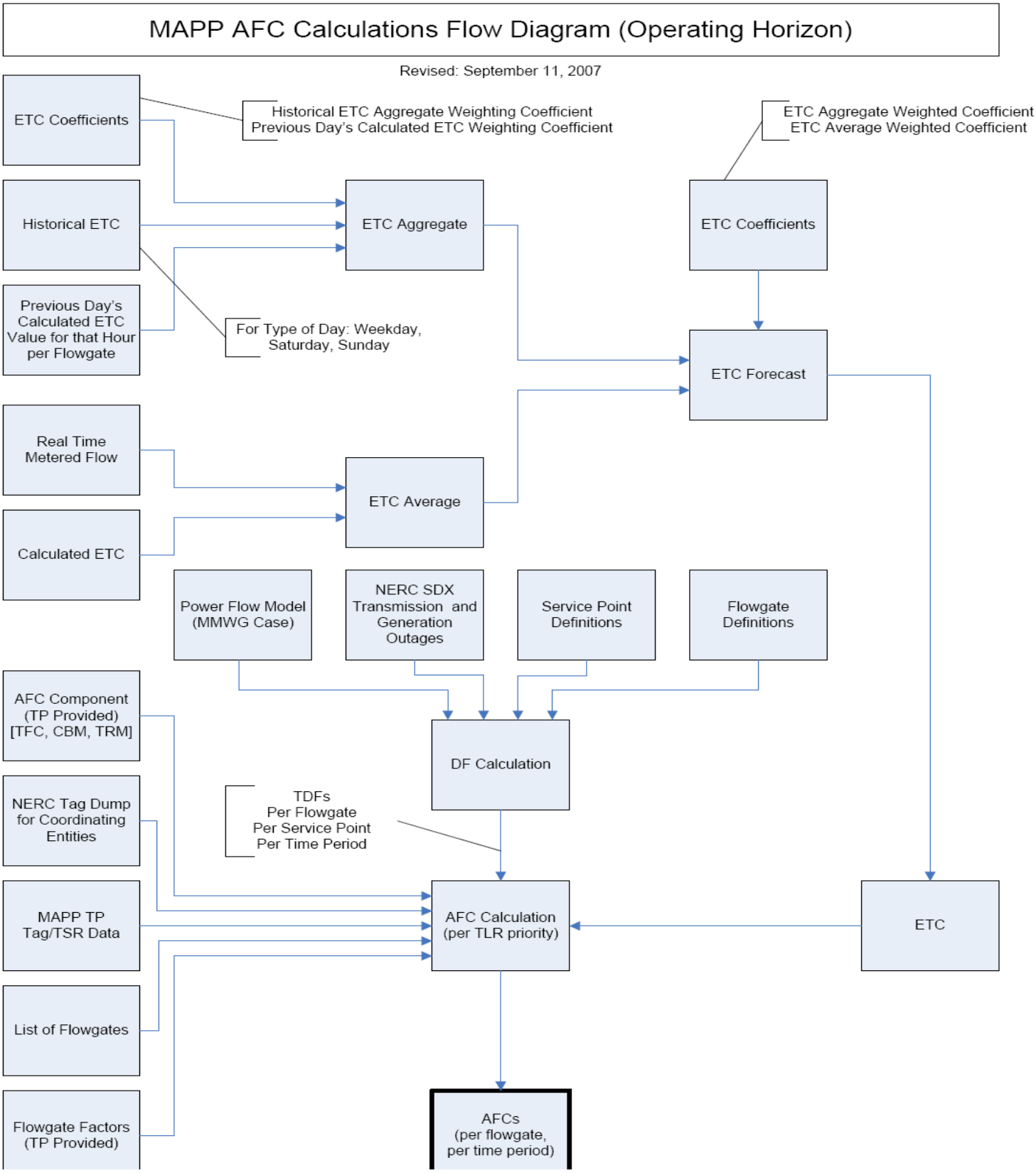
MAPP AFC Calculations Flow Diagram (Operating Horizon)
Revised: September 11, 2007
ETC Coefficients
Historical ETC Aggregate Weighting Coefficient
Previous Day's Calculated ETC Weighting Coefficient
ETC Aggregate Weighted Coefficient
ETC Average Weighted Coefficient
Historical ETC
ETC Aggregate
ETC Coefficients
Previous Day's Calculated ETC Value for that Hour per Flowgate
For Type of Day: Weekday, Saturday, Sunday
ETC Forecast
Real Time Metered Flow
ETC Average
Calculated ETC
Power Flow Model (MMWG Case)
NERC SDX Transmission and Generation Outages
Service Point Definitions
Flowgate Definitions
AFC Component (TP Provided) [TFC, CBM, TRM]
DF Calculation
NERC Tag Dump for Coordinating Entities
TDFs
Per Flowgate
Per Service Point
Per Time Period
MAPP TP Tag/TSR Data
AFC Calculation (per TLR priority)
ETC
List of Flowgates
Flowgate Factors (TP Provided)
AFCs (per flowgate, per time period)

MAPP ATC Calculations Flow Diagram (Operating Horizon)

Revised: September 11, 2007

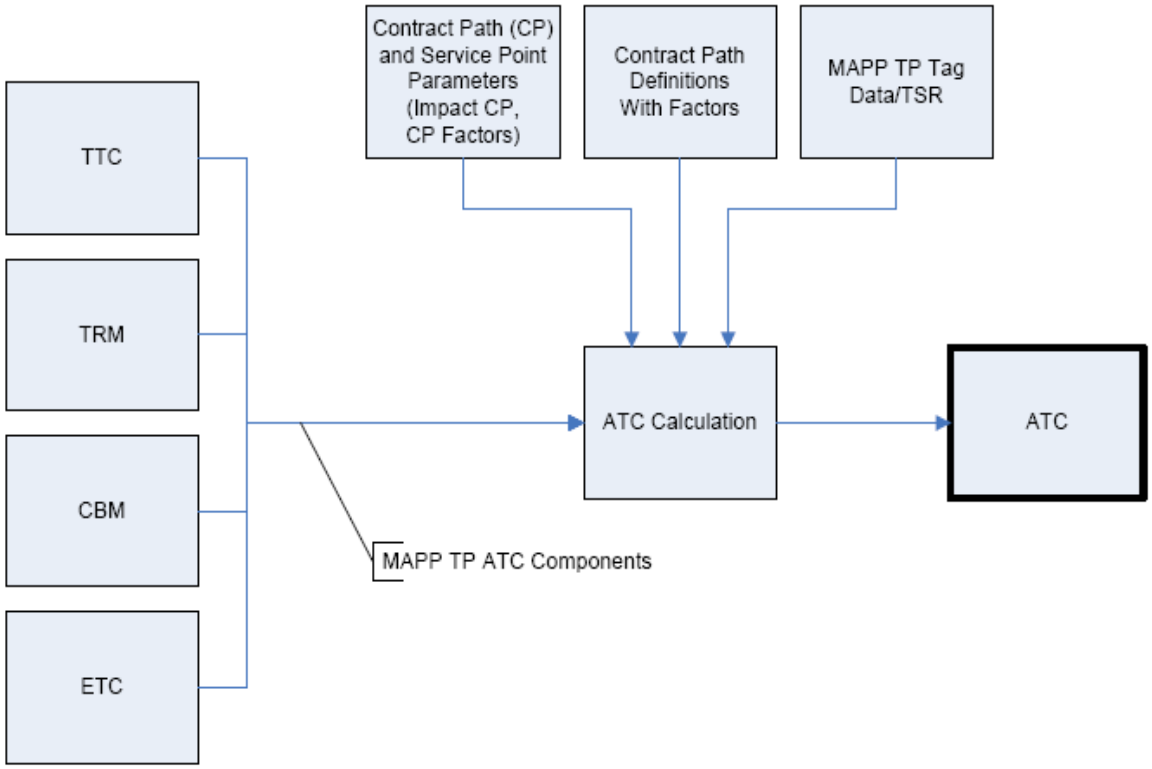

ATTACHMENT D

Methodology for Completing a System Impact Study

The Transmission Provider will assess the capability of the Transmission System to provide the service requested using the criteria and process for this assessment as detailed in Sections 4 and 5 of FERC Form 715 submitted to the Commission on behalf of the Transmission Provider by the Western Electricity Coordinating Council (WECC), in those instances where the Transmission Provider is a member of WECC or successor entity (Colorado River Storage Project, Desert Southwest Region, Rocky Mountain Region, and Sierra Nevada Region). The Transmission Provider will use the Mid-Continent Area Power Pool (MAPP) System Impact Study Methodology when the Transmission Provider is a member of MAPP, or successor entity (Upper Great Plains Region).

ATTACHMENT E

Index of Point-To-Point Transmission Service Customers

Customer	Date of Service Agreement

ATTACHMENT F

Service Agreement for
Network Integration Transmission Service

1.0 This Service Agreement, dated as of _____, is entered into, by and between the (Region) of Western Area Power Administration (Transmission Provider), and _____ (Transmission Customer), each of whom are sometimes hereinafter individually called Party and both are sometimes hereinafter collectively called the Parties. For purposes of this Service Agreement, the Transmission Provider's Transmission Systems consist of the applicable facilities described in Attachment K to the Tariff.

2.0 The Transmission Customer has been determined by the Transmission Provider to have a Completed Application for Network Integration Transmission Service under the Tariff. The Transmission Customer has provided to the Transmission Provider a deposit and nonrefundable application processing fee in accordance with the provisions of Section 29.2 of the Tariff.

3.0 Service under this Service Agreement shall commence on the later of (1) _____, or (2) the date on which construction of any Direct Assignment Facilities and/or Network Upgrades are completed, or (3) such other date as is mutually agreed. Service under this Service Agreement shall terminate on _____.

4.0 The Transmission Provider agrees to provide and the Transmission Customer agrees to take and pay for Network Integration Transmission Service in accordance with the provisions of Part III of the Tariff, and this Service Agreement.

5.0 Any notice or request made to or by either Party regarding this Service Agreement shall be made to the representative of the other Party as indicated below.

Transmission Provider:

_____
_____
_____

Transmission Customer:

_____
_____
_____

Each Party may change the designation of its representative upon oral notice to the other, with confirmation of that change to be submitted in writing within ten (10) days thereafter.

6.0 The Tariff and the "Specifications for Network Integration Transmission Service" as presently constituted or as they may be revised or superseded are incorporated herein and made a part hereof.

IN WITNESS WHEREOF, the Parties have caused this Service Agreement to be executed by their respective authorized officials.

WESTERN AREA POWER ADMINISTRATION

By _____

Title _____

Address _____

_____

Date _____

(TRANSMISSION CUSTOMER)

(SEAL)

By _____

Attest:

Title _____

By _____

Address _____

Title _____

_____

Date _____

Specifications for Network Integration Transmission Service

For purposes of this Service Agreement, the Transmission Provider's Transmission System consists of the facilities of the (Region) as described in Attachment K.

1.0 The Transmission Provider will provide Network Integration Transmission Service over the Transmission Provider's Transmission System for the delivery of capacity and energy from the Network Customer's designated Network Resources to the Network Customer's designated Network Load. The Transmission Provider will also provide non-firm transmission service from non-designated Network Resources under the terms of this Service Agreement. The loss factors associated with this Network Integration Transmission Service are set forth below. Such losses shall be applied and accounted for as set forth in Section 4.

2.0 Designated Network Resources:

Designated Network Resources & Estimated Maximum Resource (MW)	Point of Receipt	Delivering Party & Voltage

3.0 Designated Network Loads:

Designated Network Load & Estimated Maximum Resource (MW)	Point of Delivery	Voltage

4.0 Transmission Losses:

4.1 Loss Factors:

4.1.1 If, based on operating experience and technical studies, the Transmission Provider determines that any of the transmission loss factors on the Transmission Provider's Transmission System differs from the loss factors set forth in this Service Agreement, the Transmission Provider will notify the Transmission Customer of the revised loss factor(s) pursuant to Section 1.0 of this Service Agreement.

4.1.2 Transmission Provider Transmission Loss Factor: For deliveries to the Network Customer Network Load, Transmission Provider transmission losses shall initially be __% and shall be assessed on the power scheduled and transmitted to a point of delivery on the Transmission Provider's Transmission System.

4.2 Transmission losses may be revised by written notice from the Transmission Provider to the Transmission Customer.

5.0 The Network Customer's transmission facilities that are integrated with the Transmission Provider's Transmission System will receive _____ credit (To be filled in if appropriate). These facilities include the following:

5.1 (To be filled in if appropriate)
5.2 (To be filled in if appropriate)

6.0 Names of any intervening systems with whom the Network Customer has arranged for transmission service to the Transmission Provider's Transmission System.

6.1 _____
6.2 _____

7.0 Power Factor: The Transmission Customer will be required to maintain a power factor between __-percent lagging and __-percent leading for all deliveries of capacity and energy to and from the Transmission Provider's Transmission System.

8.0 Ancillary Services

8.1 Provided by Transmission Provider

8.1.1 Scheduling, System Control, and Dispatch Service
8.1.2 Reactive Supply and Voltage Control from Generation Sources Service

8.2 Provided by Transmission Customer

8.2.1 (To be filled in if appropriate)
8.2.2

8.3 Provided by _____

8.3.1 (To be filled in if appropriate)
8.3.2

9.0 Net Billing and Bill Crediting Option: The Parties have agreed to implement [Net Billing, Bill Crediting, both Net Billing and Bill Crediting, or neither Net Billing nor Bill Crediting] as set forth in Attachment J.

10.0 Charges for Service: Charges for Network Integration Transmission Service and associated Ancillary Services shall be calculated in accordance with the applicable Rate Schedule(s) attached hereto and made a part of this Service Agreement. The rates or rate methodology used to calculate the charges for service under that schedule were promulgated and may be modified pursuant to applicable Federal laws, regulations and policies.

[The following section will be included as appropriate at the Transmission Provider's discretion]

11.0 Independent System Operator: The Parties understand that the Transmission Provider may join an independent system operator under Commission jurisdiction. In the event the Transmission Provider either joins or is required to conform to protocols of the independent system operator, the Parties agree that the Transmission Provider either may (1) make any changes necessary to conform to the terms and conditions required by Commission approval of the independent system operator, or (2) terminate this Service Agreement by providing a one-year written notice to the Transmission Customer.

ATTACHMENT G

Network Operating Agreement

To be executed by the Transmission Provider if necessary, at such time as the Transmission Provider has negotiated or offered a Network Integration Transmission Service Agreement. The terms and conditions under which the Network Customer will be required to operate its facilities and the technical and operational matters associated with the implementation of Network Integration Transmission Service and this Service Agreement will be specified in a separate Network Operating Agreement.

The Network Operating Agreement will include provisions addressing the following:

Authorized Representatives of the Parties
Network Operating Committee
Load Following
System Protection
Redispatch to Manage Transmission Constraints
Maintenance of Facilities
Load Shedding
Operation Impacts
Service Conditions
Data, Information and Reports
Metering
Communications
System Regulation and Operating Reserves
Assignment
Notices
Accounting for Transmission Losses

ATTACHMENT H

Annual Transmission Revenue Requirement for Network Integration Transmission Service

1.0 The Annual Transmission Revenue Requirement for purposes of the Network Integration Transmission Service is to be set forth in a separate Rate Schedule.

2.0 The amount in 1 shall be effective until amended by the Transmission Provider or modified by the Commission pursuant to applicable Federal laws, regulations and policies, and may be revised upon written notice to the Transmission Customer.

ATTACHMENT I

Index of Network Integration Customers

Customer	Date of Service Agreement

ATTACHMENT J

Provisions Specific to the Transmission Provider

1.0 Change of Rates

Rates applicable under the Service Agreements shall be subject to change by Transmission Provider in accordance with appropriate Rate Adjustment procedures. If at any time the Transmission Provider promulgates a rate changing a rate then in effect under a Service Agreement, it will promptly notify the Transmission Customer thereof. Rates shall become effective as to the Service Agreements as of the effective date of such rate. If the adjustment in the formula or rate results in an increase in the charges for Transmission Customers, the Transmission Customer may terminate the service billed by the Transmission Provider under the Rate Formula Adjustment or Rate Adjustment by providing written notice to the Transmission Provider within ninety (90) days after the effective date of the Rate Formula Adjustment or Rate Adjustment. Said termination shall be effective on the last day of the billing period requested by the Transmission Customer not later than two (2) years after the effective date of the New Rate. Service provided by the Transmission Provider shall be paid for at the New Rate regardless of whether the Transmission Customer exercises the option to terminate service. This provision does not apply in those instances where rates change because the Transmission Provider updates charges pursuant to an existing formula rate.

2.0 Appropriations and Authorizations

2.1 Contingent Upon Appropriations

Where activities provided for in the Service Agreement extend beyond the current fiscal year, continued expenditures by the Transmission Provider are contingent upon Congress making necessary appropriations required for the continued performance of the Transmission Provider's obligations under the Service Agreement. In case such appropriation is not made, the Transmission Customer hereby releases the Transmission Provider from its contractual obligations and from all liability due to the failure of Congress to make such appropriation.

2.2 Contingent Upon Authorization Language

In order to receive and expend funds advanced from the Transmission Customer necessary for the continued performance of the obligations of the Transmission Provider under the Service Agreement, additional authorization may be required. In case such authorization is not received, the Transmission Customer hereby releases the Transmission Provider from those contractual obligations and from all liability due to the lack of such authorization.

3.0 Covenant Against Contingent Fees

The Transmission Customer warrants that no person or selling agency has been employed or retained to solicit or secure the Service Agreement upon a contract or understanding for a commission, percentage, brokerage, or contingent fee, excepting bona fide employees or bona fide established commercial or selling agencies maintained by the Transmission Customer for the purpose of securing business. For breach or violation of this warranty, the Transmission Provider shall have the right to annul the Service Agreement without liability or in its discretion to deduct from the Service Agreement price or consideration the full amount of such commission, percentage, brokerage, or contingent fee.

4.0 Contract Work Hours and Safety Standards

The Service Agreement, to the extent that it is of a character specified in Section 103 of the Contract Work Hours and Safety Standards Act (Act), 40 U.S.C. § 3701, as amended or supplemented, is subject to the provisions of the Act, 40 U.S.C. §§ 3701-3708, as amended or supplemented, and to regulations promulgated by the Secretary of Labor pursuant to the Act.

5.0 Equal Opportunity Employment Practices

Section 202 of Executive Order No. 11246, 30 Fed. Reg. 12319 (1965), as amended by Executive Order No. 12086, 43 Fed. Reg. 46501 (1978), as amended or supplemented, which provides, among other things, that the Transmission Customer will not discriminate against any employee or applicant for employment because of race, color, religion, sex, or national origin, is incorporated by reference in the Service Agreement the same as if the specific language had been written into the Service Agreement, except that Indian Tribes and tribal organizations may apply Indian preference to the extent permitted by Federal law.

6.0 Use of Convict Labor

The Transmission Customer agrees not to employ any person undergoing sentence of imprisonment in performing the Service Agreement except as provided by 18 U.S.C. § 3622(c), as amended or supplemented, and Executive Order 11755, 39 Fed. Reg. 779 (1973), as amended or supplemented.

7.0 Entire Agreement

The Service Agreements, including the Tariff, together with the specifications under such Service Agreement and any completed scheduling forms shall constitute the entire understanding between the Transmission Provider and the Transmission Customer with respect to Transmission Service thereunder.

8.0 Power Supply Obligations

The Transmission Provider shall not be obligated to supply capacity and energy from its own sources or from its purchases from other neighboring systems during Interruptions or Curtailments in the delivery by the Transmission Provider or delivery to the Transmission Provider by the Delivering Party of capacity and energy for Transmission Service hereunder, and nothing in the Service Agreement or in the Transmission Customer's agreements with others shall have the effect of making, nor shall anything in the Service Agreement or said agreements with others be construed to require the Transmission Provider to take any action which would make the Transmission Provider, directly or indirectly, a source of power supply to the Transmission Customer, to any Delivering Party or Receiving Party, or to any ultimate recipient other than through the provision of Operating Reserve Service.

9.0 Federal Law

Performance under the Tariff and Service Agreement shall be governed by applicable Federal law.

10.0 Continuing Obligations

The applicable provisions of the Service Agreement will continue in effect after termination of the Service Agreement to the extent necessary to provide for final billing, billing adjustments and payments, and with respect to liability and indemnification from acts or events that occurred while this Service Agreement was in effect.

11.0 Net Billing

As mutually agreed in the Service Agreement, payments due the Transmission Provider by a Transmission Customer may be offset against payments due the Transmission Customer by the Transmission Provider for the use of transmission facilities, operation and maintenance of electric facilities, and other services. For services included in net billing procedures, payments due one Party in any month shall be offset against payments due the other Party in such month, and the resulting net balance shall be paid to the Party in whose favor such balance exists. The Parties shall exchange such reports and information that either Party requires for billing purposes. Net billing shall not be used for any amounts due which are in dispute.

12.0 Bill Crediting

As mutually agreed in the Service Agreement, payments due the Transmission Provider by a Transmission Customer shall be paid by a Transmission Customer to a third party when so directed by the Transmission Provider. Any third party designated to receive payment in lieu of the Transmission Provider, and the amount to be paid to that party, will be so identified in writing to a Transmission Customer with the monthly power bill. The payment to the third party shall be due and payable by the payment due date specified on the Transmission Provider's bill. When remitting payment to a designated third party, a Transmission Customer shall indicate that

such payment is being made on behalf of the Transmission Provider. The Transmission Provider shall credit a Transmission Customer for the amount paid as if payment had been made directly to the Transmission Provider. All other payment provisions shall remain in full force and effect.

13.0 Costs Associated with United States Bureau of Reclamation and United States Army Corps of Engineers Interconnections

The Transmission Provider and the United States Bureau of Reclamation (Bureau) and the United States Army Corps of Engineers (Corps) have a unique statutory relationship which requires the Transmission Provider to repay to the United States Treasury obligations incurred by those two entities related to the production of power. Requiring the Bureau or Corps to submit deposits to the Transmission Provider or to directly pay for costs associated with interconnection study work under the Tariff, including the Large Generator Interconnection Agreement or Large Generator Interconnection Procedures, will result in additional unnecessary administrative burdens and overhead charges. Therefore, Transmission Provider reserves the right, at the Transmission Provider's discretion, to not require the Bureau or the Corps to pay negotiation costs under the Large Generation Interconnection Procedures, or submit deposits in whole or in part for study work or for placing reservations in the queue. Transmission Provider will account for these costs under the Transmission Provider's Tariff as if such costs had been paid by the Bureau or Corps, including costs associated with the Standard Large Generator Interconnection Agreement (LGIA) or Standard Large Generator Interconnection Procedures (LGIP) found in Attachment L of the Transmission Provider's Tariff.

14.0 Participant Funding

The Transmission Provider reserves the right to negotiate participant funding provisions if and when it deems necessary, and to incorporate the results of such negotiations into the LGIA. This will allow Transmission Provider to properly and equitably fulfill its responsibility as the transmission provider for various facilities owned by other entities, including facilities in which Transmission Provider has joint ownership.

15.0 Liability

The Transmission Provider is only liable for negligence on the part of its officers and employees in accordance with the Federal Tort Claims Act, 28 U.S.C. § 1346(b), 1346(c), 2401(b), 2402, 2671, 2672, 2674-2680, as amended or supplemented.

16.0 Environmental Compliance

Transmission [or Interconnection] Customer recognizes that as a Federal agency, Transmission Provider must comply with various environmental and natural resource laws regulating the construction, operation and maintenance of its transmission facilities, including but not limited to the National Historic Preservation Act, 16 U.S.C § 470 to 470x-6, the National Environmental Policy Act of 1969, 42 U.S.C. §§ 4321-4347, the Endangered Species Act, 16 U.S.C. §§ 1531-1544, and the Archaeological Resources Protection Act of 1979, 16 U.S.C. § 470aa-470mm

(2006): and regulations, and executive orders implementing these laws, as they may be amended or supplemented, as well as any other existing or subsequent applicable laws, regulations and executive orders. Transmission [or Interconnection] Customer shall comply with all environmental laws, regulations and resource protection measures, including but not limited to, any mitigation measures and Best Management Practices associated with the Transmission [or Interconnection] Customer's requested service. Transmission [or Interconnection] Customer understands that the Transmission Provider's decision to execute the LGIA is dependent on conclusions reached in the record of decision under NEPA, or other such appropriate NEPA document, concerning the respective project and that Transmission Provider's NEPA review could result in a decision not to execute a Tariff agreement or to delay Tariff agreement execution. This decision shall not be subject to dispute resolution.

ATTACHMENT K

Authorities and Obligations

Western was established on December 21, 1977, pursuant to Section 302 of the Department of Energy (DOE) Organization Act, Public Law 95-91, dated August 4, 1977. By law, the Bureau of Reclamation provides Federal power resources to its project use customers. By law, Western markets Federal power resources to its electric service customers. Western's transmission system was built primarily to enable the delivery of Federal power to satisfy these obligations.

Western is not a public utility under Sections 205 and 206 of the Federal Power Act and is not specifically subject to the requirements of the Commission's Final Orders related to Open Access Transmission or Generator Interconnections. Western is a transmitting utility subject to Sections 210-213 of the Federal Power Act. The Department of Energy has issued a Power Marketing Administration Open Access Transmission Policy that supports the intent of the Commission's Notice of Proposed Rulemaking for Open Access Transmission.

Use of transmission facilities that Western owns, operates, or to which it has contract rights for delivery of Federal long-term firm capacity and energy to project use and electric service customers is a Western responsibility under the terms and conditions of marketing criteria and electric service contracts implementing statutory obligations to market Federal power. This is complementary with the provisions of the Tariff. Transmission service provided by Western under the Tariff is solely for the use of Available Transfer Capability (ATC) in excess of the capability Western requires for the delivery of long-term firm capacity and energy to project use and electric service customers of the Federal government. Western will offer to provide others transmission service equivalent to the service Western provides itself.

Western's Regional Offices' reserved transmission capacity shall therefore include capacity sufficient to deliver Federal power resources to customers of the Federal government. Nothing in this Tariff shall alter, amend or abridge the statutory or contractual obligations of Western to market and deliver Federal power resources and to repay the Federal investment in such projects. The Tariff provides for transmission service, including each Regional Office's use of those facilities for Third Party Sales, on the unused capability of transmission facilities under the jurisdiction or control of each of Western's Regional Offices not required for the delivery of long-term firm capacity and energy to customers of the Federal government in a manner consistent with the spirit and intent of the Commission's Order Nos. 888 and 890, et seq.

Western has prepared this Tariff and Service Agreements to provide transmission service comparable to that required of public utilities by the Commission's open access orders, and to implement those orders consistent with the DOE Policy. An entity desiring transmission service from Western must comply with the application procedures outlined herein. The review and approval requirements detailed herein will apply to all requesting parties. Western will perform the necessary studies or assessments for evaluating requests for transmission service as set forth in the Tariff. Any facility construction or interconnection necessary to provide transmission

service will be subject to Western's General Requirements for Interconnection which are available upon request.

Western will provide Firm and Non-Firm Point-to-Point Transmission Service and Network Integration Transmission Service under this Tariff. The specific terms and conditions for providing transmission service to a customer will be included in a Service Agreement. Operating Procedures, ATC, and System Impact Methodology are defined in the Attachments. Western's rates are developed under separate public processes pursuant to applicable Federal law and regulations. Therefore, rates and charges for specific services will be set forth in the appropriate Regional rate schedules attached to each Service Agreement.

Western has marketed the maximum practical amount of power from each of its projects, leaving little or no flexibility for provision of additional power services. Changes in water conditions frequently affect the ability of hydroelectric projects to meet obligations on a short-term basis. The unique characteristics of the hydro resource, Western's marketing plans and the limitations of the resource due to changing water conditions limit Western's ability to provide generation-related services including Ancillary Services and redispatching using Federal hydro resources.

Western operates in 15 central and western states encompassing a geographic area of 3.38 million-square-kilometers (1.3 million-square-miles). Western has four Customer Service Regional Offices, the Desert Southwest Region, Rocky Mountain Region, Sierra Nevada Region, Upper Great Plains Region, and the Colorado River Storage Project Management Center. Each office is referred to in the Tariff as Regional Office. The addresses for submitting applications to Western's Regional Offices by mail, as well as the respective OASIS links, are available on Western's web site at www.wapa.gov.

Colorado River Storage Project Management Center

The Colorado River Storage Project Management Center (CRSP MC), located in Salt Lake City, Utah, markets power from three Federal multipurpose water development projects; the Colorado River Storage Project (CRSP), the Collbran Project, and the Rio Grande Project, collectively called the Integrated Projects. The hydroelectric facilities associated with these projects include: Flaming Gorge and Fontenelle powerplants on the Green River; Blue Mesa, Morrow Point, and Crystal powerplants on the Gunnison River; Upper and Lower Molina powerplants of the Collbran Project in Western Colorado; the largest of the CRSP facilities, Glen Canyon powerplant on the Colorado River; and Elephant Butte powerplant, part of the Rio Grande Project on the Rio Grande River in South Central New Mexico; McPhee powerplant and Towaoc Canal on the Dolores River in southwestern Colorado. The CRSP transmission system consists of high-voltage transmission lines and attendant facilities extending from Arizona, into New Mexico, through Colorado, and into portions of Utah and Wyoming. The CRSP MC uses the CRSP transmission system to meet its commitments to its Federal customers, point-to-point transmission customers, and exchange power contractors. The CRSP MC must, therefore, reserve sufficient transmission capacity to meet these long-term obligations. The CRSP MC also needs to reserve capacity in its transmission system to enable it to deliver power produced by the

Integrated Projects hydroelectric powerplants during periods when flood control water releases produce greater than normal generation levels.

The CRSP MC office, located in Salt Lake City, is a member of the Western Electricity Coordinating Council (WECC).

The CRSP MC does not operate a Control Area and as such may be unable to provide some or all of the services under the Tariff from its Integrated Projects hydroelectric resources, including, but not limited to, ancillary services and Network Integration Transmission Service.

Desert Southwest Region

The Desert Southwest Region (DSR) manages transmission facilities in the states of Arizona, California, and Nevada. The DSR transmission facilities are interconnected with transmission facilities of several non-Federal entities and its system is operated in the WECC. For the purpose of implementing this Tariff the transmission facilities of the Parker-Davis Projects and the Pacific Northwest-Pacific Southwest Intertie Project (Pacific AC Intertie) will be utilized. For the purpose of implementing this Tariff, references in the Tariff to "deliveries of long-term firm capacity and energy" include the deliveries of Boulder Canyon Project electric service over the DSR Transmission System. DSR manages a control area operations center through its Desert Southwest Regional Office located in Phoenix, Arizona.

Rocky Mountain Region

The Rocky Mountain Region (RMR) manages transmission facilities in the states of Colorado, Wyoming, Nebraska, and Kansas which were constructed for the primary purpose of marketing power from the Pick-Sloan Missouri Basin Program - Western Division. The RMR office and Control Area operations center is located in Loveland, Colorado and its system is operated in the WECC.

For RMR, the rates for Point-to-Point and Network Integration Transmission Service charged pursuant to the Tariff will be calculated using the costs of the transmission facilities of the Pick-Sloan Missouri Basin Program - Western Division. The rates for the Ancillary Services will be calculated using the costs of the generation facilities of the CRSP within the RMR control area, Pick-Sloan Missouri Basin Program - Western Division and the Fryingpan-Arkansas Project.

Sierra Nevada Region

The Sierra Nevada Customer Service Region (SNR), located in Folsom, California, manages the Central Valley Project (CVP) transmission facilities in the State of California. These facilities were constructed for the primary purpose of marketing power resources from the CVP. SNR also has ownership rights to capacity in three multi-party transmission systems, the Pacific AC Intertie, the California-Oregon Transmission Project (COTP), and the Los Banos-Gates Transmission Upgrade Project (Path 15). Congress authorized SNR's participation in the Pacific

AC Intertie for the purpose of importing power from the Pacific Northwest. COTP rights were acquired pursuant to Public Laws 98-360 and 99-88, primarily for the purpose of delivering power to the United States Department of Energy Laboratories and Federal Fish and Wildlife refuges. Path 15 upgrade rights were also acquired pursuant to Public Laws 98-360 and 99-88. Long-term use of the Pacific AC Intertie, CVP and COTP by third parties is restricted under existing contracts. SNR has turned over operational control of its Path 15 upgrade rights to the California Independent System Operator (CAISO). Therefore, the CAISO, or its successor will offer transmission service on Path 15. SNR is a member of the WECC.

The SNR does not operate a Control Area and as such may be unable to provide some or all of the services under the Tariff, including but not limited to, Ancillary Services and Network Integration Transmission Service.

Upper Great Plains Region

The Upper Great Plains Region (UGPR) manages transmission facilities in the states of Montana, North Dakota, South Dakota, Nebraska, Minnesota, and Iowa which were constructed for the primary purpose of marketing power from the Pick-Sloan Missouri Basin Program - Eastern Division. The UGPR office is located in Billings, Montana. The UGPR manages a Control Area operations center in Watertown, South Dakota. The eastern portion of the UGPR system is operated in the MAPP reliability council, or successor entity. The western portion of the system is operated in the WECC.

The UGPR transmission facilities are integrated with the transmission facilities of Basin Electric Power Cooperative (Basin) and Heartland Consumers Power District (Heartland) such that transmission services are provided over an integrated transmission system. UGPR rates for Point-to-Point and Network Integration Transmission Service charged pursuant to the Tariff will be calculated using the costs of the transmission facilities of UGPR, Basin, and Heartland that are included in the Transmission System. This Transmission System is also called the Integrated System (IS) and the rates are identified as IS Rates.

Both Basin and Heartland also own generating facilities and must commit to deliver the output of those resources to their respective members. Basin and Heartland will therefore reserve sufficient capacity in their transmission facilities to deliver that output.

Any Transmission Customer taking service under this Tariff shall be subject to a Stranded Cost Charge payable to either UGPR, Basin or Heartland if such service is used for the transmission of power or energy that replaces wholly or in part, power or energy supplied by Western, Basin or Heartland, respectively.

The Stranded Cost Charge of Basin shall be applicable regardless of whether the transmission relates to power and/or energy that is purchased by or on behalf of a Generation and Transmission Cooperative member of Basin (G&T), a Distribution Cooperative member of Basin or G&T, or a retail customer of a Distribution Cooperative member of Basin or a G&T.

The Stranded Cost Charge of Heartland shall be applicable whether the transmission service relates to power and/or energy that is purchased by or on behalf of a municipal customer of Heartland or a retail customer of a municipal customer of Heartland.

Stranded costs will be recovered only from a Transmission Customer who obtains transmission service under access rights granted through the Transmission Provider's compliance tariff developed pursuant to The Commission's Final Order Nos. 888 and 888-A and causes either UGPR, Basin or Heartland to incur stranded costs. Stranded costs will be recovered through the terms and conditions of a separate contract entered into either by UGPR and the Transmission Customer or Basin and the Transmission Customer or Heartland and the Transmission Customer.

ATTACHMENT L

Standard Large Generator Interconnection Procedures Including Standard Large Generator Interconnection Agreement

[This Attachment L reserved for Western's Commission-approved Standard Large Generator Interconnection Procedures and Agreement, as filed with the Commission and posted on Western's OASIS.]

ATTACHMENT M

Standard Small Generator Interconnection Procedures Including Standard Small Generator Interconnection Agreement

[This Attachment M reserved for Western's Commission-approved Standard Small Generator Interconnection Procedures and Agreement, as filed with the Commission and posted on Western's OASIS.]

ATTACHMENT N

North American Energy Standards Board Wholesale Electric Quadrant Standards

The following North American Energy Standards Board Wholesale Electric Quadrant standards are incorporated by reference into Transmission Provider's Tariff as described in section 4.2 therein:

- Business Practices for Open Access Same-Time Information Systems (OASIS), Version 1.4 (WEQ-001, Version 001, October 31, 2007, with minor corrections applied on November 16, 2007) including Standards 001-0.2 through 001-0.8, 001-0.14 through 001-0.20, 001-2.0 through 001-9.6.2, 001-9.8 through 001-12.5.2, and 001-A through 001-B;

- Business Practices for Open Access Same-Time Information Systems (OASIS) Standards & Communication Protocols, Version 1.4 (WEQ-002, Version 001, October 31, 2007, with minor corrections applied on November 16, 2007) including Standards 002-0.1 through 002-5.10;

- Open Access Same-Time Information Systems (OASIS) Data Dictionary, Version 1.4 (WEQ-003, Version 001, October 31, 2007, with minor corrections applied on November 16, 2007) including Standard 003-0;

- Coordinate Interchange (WEQ-004, Version 001, October 31, 2007, with minor corrections applied on November 16, 2007) including Purpose, Applicability, and Standards 004-0.1 through 004-17.2, and 004-A through 004-D;

- Area Control Error (ACE) Equation Special Cases Standards (WEQ-005, Version 001, October 31, 2007, with minor corrections applied on November 16, 2007) including Purpose, Applicability, and Standards 005-0.1 through 005-3.1.3, and 005-A;

- Manual Time Error Correction (WEQ-006, Version 001, October 31, 2007, with minor corrections applied on November 16, 2007) including Purpose, Applicability, and Standards 006-0.1 through 006-12;

- Inadvertent Interchange Payback (WEQ-007, Version 001, October 31, 2007, with minor corrections applied on November 16, 2007) including Purpose, Applicability, and Standards 007-0.1 through 007-2, and 007-A;

- Transmission Loading Relief – Eastern Interconnection (WEQ-008, Version 001, October 31, 2007, with minor corrections applied on November 16, 2007) including Purpose, Applicability, and Standards 008-0.1 through 008-3.11.2.8, and 008-A through 008-D;

- Gas/Electric Coordination (WEQ-011, Version 001, October 31, 2007, with minor corrections applied on November 16, 2007) including Standards 011-0.1 through 011-1.6;

- Public Key Infrastructure (PKI) (WEQ-012, Version 001, October 31, 2007, with minor corrections applied on November 16, 2007) including Recommended Standard, Certification, Scope, Commitment to Open Standards, and Standards 012-0.1 through 012-1.26.5; and

- Business Practices for Open Access Same-Time Information Systems (OASIS) Implementation Guide, Version 1.4 (WEQ-013, Version 001, October 31, 2007, with minor corrections applied on November 16, 2007) including Introduction and Standards 013-0.1 through 013-4.2.

ATTACHMENT O

Procedures for Addressing Parallel Flows

For the Transmission Provider's facilities in the Western Electricity Coordinating Council:

The North American Electric Reliability Corporation's ("NERC") Qualified Path Unscheduled Flow Relief for the Western Electricity Coordinating Council ("WECC"), Reliability Standard WECC-IRO-STD-006-0 filed by NERC in Docket No. RR07-11-000 on March 26, 2007, and approved by the Commission on June 8, 2007, and any amendments thereto, are hereby incorporated and made part of this Tariff. See www.nerc.com for the current version of the NERC's Qualified Path Unscheduled Flow Relief Procedures for WECC.

For the Transmission Provider's facilities in the Eastern Interconnection:

NERC's TLR Procedures originally filed March 18, 1998, which are now the mandatory Reliability Standards that address TLR, and any amendments thereto, on file and accepted by the Commission, are hereby incorporated and made part of this Tariff. See www.nerc.com for the current version of the NERC's TLR Procedures.

ATTACHMENT P

Transmission Planning Process

Overview of Western's Transmission Planning Processes

The Western Area Power Administration (Western) is a Federal agency under the Department of Energy that markets and transmits wholesale electrical power from 56 federal hydropower plants and one coal-fired plant. Western sells about 40 percent of regional hydroelectric generation in a service area that covers 1.3 million square miles in 15 states. To provide this reliable electric power to most of the western half of the United States, Western markets and transmits about 10,000 megawatts of hydropower across an integrated 17,000-circuit mile, high-voltage transmission system.

Western's customers include municipalities, cooperatives, public utility and irrigation districts, Federal and state agencies, investor-owned utilities (only one of which has an allocation of Federal hydropower from Western), marketers and Native American tribes. They, in turn, provide retail electric service to millions of consumers in Arizona, California, Colorado, Iowa, Kansas, Minnesota, Montana, Nebraska, Nevada, New Mexico, North Dakota, South Dakota, Texas, Utah and Wyoming.

Western's role in delivering power also includes managing 10 different rate-setting systems. These rate systems are made up of 14 multipurpose water resource projects and one transmission project. The systems include Western's transmission facilities along with power generation facilities owned and operated primarily by the U.S. Bureau of Reclamation, the U.S. Army Corps of Engineers and the U.S. State Department's International Boundary and Water Commission. Western sets power rates to recover all costs associated with our activities, as well as the Federal investment in the power facilities (with interest) and certain costs assigned to power from repayment, such as aid to irrigation development.

Western employees sell power and transmission service, operate transmission and provide maintenance and engineering services. These duty locations include Western's Corporate Services Office in Lakewood, Colo., and four regions with offices in Billings, Mont.; Loveland, Colo.; Phoenix, Ariz.; and Folsom, Calif. Western also markets power from the Management Center in Salt Lake City, Utah, and also manages Upper Great Plains Region system operations and maintenance from offices in Bismarck, N.D.; Fort Peck, Mont.; Huron, S.D. and Watertown, S.D.

Since its inception on December 21, 1977, Western and its employees have been dedicated to providing public service, including promoting environmental stewardship, energy efficiency and renewable energy and implementing new technologies to ensure its transmission system is the most reliable possible.

Western's Attachment P is divided into Part I and Part II – Part I outlines the transmission planning process Western uses in the Upper Great Plains Region (UGPR) on both the Eastern and Western Interconnections, while Part II outlines the process used in the remaining Western regions in the Western Interconnection.

Western's transmission planning process is based on three core objectives:

- Maintain reliable electric service.
- Improve the efficiency of electric system operations, including the provision of open and non-discriminatory access to its transmission facilities.
- Identify and promote new investments in transmission infrastructure in a coordinated, open, transparent and participatory manner.

Western's transmission planning process is intended to facilitate a timely, coordinated and transparent process that fosters the development of electric infrastructure that maintains reliability and meets Network load growth, so that Western can continue to provide reliable low cost electric power to its customers.

The transmission planning process conducted by Western includes a series of open planning meetings that allow anyone, including, but not limited to, network and point-to-point transmission customers, interconnected neighbors, sponsors of transmission solutions, generation solutions and solutions utilizing demand resources, and other stakeholders, input into and participation in all stages of development of Western's transmission plan.

PART I - Upper Great Plains Region

Part I of this Attachment P addresses the rights and obligations of Transmission Customers, Affected Generators, other relevant stakeholders, and the Western Upper Great Plains Region (Transmission Provider) related to Transmission Planning within the UGPR. Specifically, Part I of Attachment P addresses: (a) the Mid-Continent Area Power Pool ("MAPP") regional planning process adopted by the Regional Transmission Committee ("RTC") Members of MAPP in the RTC Region, as those terms are defined by the MAPP Restated Agreement (Sections 1.0 to 12.0); (b) the Transmission Provider's local planning process for local facilities not covered by the respective regional planning processes (Section 13.0); and (c) the Western Electricity Coordinating Council (WECC) regional planning in relation to Western's UGPR facilities within the Western Interconnection (Section 14.0). Supporting documents related to Transmission Planning within the UGPR, Part I of this Attachment P are available on the Transmission Provider's (Western's UGPR) OASIS page located at http://www.oatioasis.com/wapa/index.html under the Transmission Planning Process folder. Within this folder, Western's UGPR posts an Attachment P links document that provides URLs for both Part I a , the Regional Planning Process within MAPP, Part I B, the Local Planning Process, and Part I c, the Regional Planning Process with WECC for Western's UGPR as noted above.

1.0 Introduction to the MAPP Sub-regional Planning Process

The MAPP Regional Plan integrates the transmission plans developed by individual MAPP Members through the RTC's Transmission Planning Subcommittee ("TPSC") and by subregional planning groups ("SPGs"), in order to meet the transmission needs in the MAPP Region of Members and interested parties on a consistent, reliable, environmentally acceptable and economic basis. The MAPP Regional Plan shall be consistent with applicable standards and requirements established by the MAPP Members Reliability Criteria and Study Procedures Manual and by the North American Electric Reliability Council ("NERC") and Midwest Reliability Organization ("MRO") Planning Standards.

2.0 Definitions

2.1 Host Transmission Owner ("Host TO"). The transmission owner on whose transmission system a proposed Economic Network Upgrade is to be located. The Host TO shall conduct all related project management activities associated with the Economic Network Upgrade. If facility upgrades are required on more than one transmission owner's transmission system for a given set of transmission facilities comprising an Economic Network Upgrade, the affected Host TOs shall provide a single joint Facilities Agreement to the Subscription Rights buyers.

2.2. Affected Generator. A generator owner whose existing or proposed generating unit(s) is directly affected by a proposed Economic Network Upgrade as demonstrated in the study analysis performed in conjunction with Section 11, Economic Planning Studies of this Attachment P.

2.3 Affected System. The transmission owner's system, including the Host TO, that is affected by the allocations in an economic benefits study performed by the MAPP RTC in accordance with Section 11 of this Attachment P.

2.4 Affected System Operator. The transmission owner/operator that operates an Affected System.

2.5 Economic Network Upgrade. A project, or set of projects, that is designed to relieve a constrained facility by providing additional transmission capacity, and which has been identified to be: (a) a local economically beneficial project within a single transmission owner's system; or (b) an economically beneficial project classified as a Regionally Beneficial Project in the MAPP Plan, and defined by an Economic Planning Study authorized by the MAPP RTC in Section 11 of this Attachment P as having project benefits exceeding project costs.

2.6 Physical Transmission Rights. Rights held by a party to a Facilities Agreement to schedule transmission service across a defined portion of a NERC flowgate or other transmission facility and/or to collect revenue credits, if applicable, against

transmission service charges. Physical Transmission Rights will exist for the life of the facility if the holder is an owner, or for the term stated in the Facilities Agreement. The facility's capabilities that are to be allocated as Physical Transmission Rights, shall be consistent with the owner's or joint-owners' methodologies for determining facility ratings, system operating limits and, if applicable, TTC and ATC in accordance with NERC standards.

2.7 Renewable Energy Zone. A geographic region recognized by the TPSC that has limited or constrained ability to transport electric energy from generating units that had such units been in production they would have utilized renewable resources for the production of electric energy.

2.8 Subscription Rights. Contractual rights to use the transmission capacity associated with an Economic Network Upgrade defined in a Facilities Agreement with the Host TO in exchange for payments to the Host TO for facility charges and continuing operation and maintenance charges.

2.9 Other Defined Terms. All other terms will have the meanings set forth in the MAPP Restated Agreement, the TPSC procedures, and the SPG guidelines.

3.0 MAPP Regional Transmission Planning

3.1 Member Plans. As part of the MAPP regional transmission planning process, each RTC Member that has transmission facilities under MAPP's Restated Agreement shall prepare and maintain a plan for its transmission facilities ("Member Plan"). Such Member Plans shall conform to applicable reliability standards and requirements, and to applicable methods and assessment practices and other transmission planning standards and requirements established by the RTC. Each Member Plan shall adhere to Local Transmission Planning Standards set forth in Section 13 of this Attachment P. Such plans shall take into account:

(a) the RTC Member's current and anticipated requirements for transmission to provide all-requirements and partial requirements service and service to its end-use loads;

(b) the current and anticipated requirements for transmission to provide network transmission service to those entities for which the RTC Member provides such service;

(c) the RTC Member's other contractual and tariff obligations to provide firm transmission service;

(d) any other contractual obligations of the RTC Member affecting the use of its transmission facilities;

(e) any requirements for future transmission service of a Member or interested party communicated to the RTC Member under procedures, standards and requirements established by the RTC;

(f) the coordination of the RTC Member's transmission plan with the transmission plans of neighboring systems, and in particular any coordination parameters or requirements identified by the relevant subregional working groups used by the RTC; and

(g) the obligation of the RTC Member under FERC requirements, the MAPP Restated Agreement, and applicable standards and requirements established by the RTC to provide transmission service to other entities on a basis comparable to its own use of its transmission facilities.

3.2 Availability of Plans and Information. The RTC Members' transmission plans, along with the information on which the plans are based, shall be made available to the RTC on a regular basis as established by the RTC. Each RTC Member shall make its transmission plan available upon request to any other RTC Member, independent Regional Transmission Organization or relevant non-MAPP neighboring transmission owning utilities. Sufficient additional information should be made available to enable the requesting entity to perform planning analyses on the same basis as the RTC Member providing the information. Such information shall be provided in accordance with the MAPP Critical Energy Infrastructure Information ("CEII") policy and the Commission's Standards of Conduct regulations.

3.3 Planning Procedures and Requirements. The RTC shall establish procedures and requirements for:

(a) The communication to an RTC Member by Members and interested parties of their bona fide requirements for transmission service;

(b) The utilization of SPGs for the coordination of RTC Members' transmission plans and the resolution of subregional transmission planning issues on an informal, collaborative basis, which working groups shall be open to any interested RTC Member or other interested party, and shall maintain such records as shall be required by the RTC;

(c) The incorporation of asserted bona fide requirements for transmission service into RTC Member, subregional, and regional transmission plans; and

(d) The development of integrated transmission plans by the subregional working groups, and the integration of the subregional plans into a transmission plan for the MAPP RTC Region.

3.4 The MAPP Regional Plan. No less often than biennially, the RTC shall develop and approve a coordinated transmission plan, including alternatives, for the ensuing 10 years, or other planning period specified by NERC, for all transmission facilities in the MAPP RTC Region at a capacity of 115 kV or greater. The MAPP Regional Plan shall integrate the transmission plans developed by individual RTC Members and by subregional working groups, for the purpose of enabling the transmission needs in the MAPP RTC Region of Member and interested parties to be met on a consistent, reliable, environmentally acceptable and economic basis.

The MAPP Regional Plan shall avoid unnecessary duplication of facilities or the imposition of unreasonable costs on any RTC Member, shall take into account the legal and contractual rights and obligations of all Members, may provide alternative means for meeting transmission needs in the MAPP RTC Region, and shall differentiate proposed transmission projects from projects for which a definitive commitment of resources has been made *e.g.*, projects under the Subscription Rights process or under a Facilities Agreement.

The MAPP Regional Plan shall be consistent with standards and requirements established by the applicable reliability entity. The RTC shall develop policies and procedures for updating or modifying the Plan between biennial planning cycles as may be appropriate. Any Member, Regulatory Participant, or interested party may attend any meeting of the RTC or any of its subcommittees dealing with the MAPP Regional Plan.

4.0 <u>MAPP Regional Planning Process</u>

4.1 MAPP Regional Plan Development Process. The TPSC, the RTC Subcommittee responsible for planning in the MAPP region, shall collect the individual Member Plans of the MAPP Members and integrate these Member Plans utilizing Subregional Planning Groups into four coordinated Subregional Plans. All MAPP Members are obligated to submit their transmission Member Plans to the TPSC under the MAPP Restated Agreement. These Members Plans are to include the needs of all stakeholders in the Member's service area. The Subregional Plans primarily address local load serving needs and subregional issues, but are not precluded from providing for regional transmission needs.

The TPSC collects these Subregional Plans and integrates them into a single coordinated preliminary MAPP Regional Plan. The TPSC assesses the adequacy and security of the preliminary MAPP Regional Plan to meet the local, subregional, regional and inter-regional reliability and market needs, and where required, identifies and evaluates alternatives and recommends preferred plans to address deficiencies. The final MAPP Regional Plan is submitted to the RTC for approval. The appropriate Transmission Owning Members of MAPP, as that term

is defined in the MAPP Restated Agreement, are responsible for designing, constructing and placing into service the various transmission projects comprising the MAPP Regional Plan, after satisfying applicable regulatory requirements.

The TPSC initiates several activities as part of a planning process to produce the MAPP Regional Plan. These activities included collection of planning input data, preparation of study models, the formation of SPGs to collect and coordinate individual Member Plans, collaboration with regulatory agencies, and a procedure to study and evaluate the effectiveness of proposed enhancements in addressing regional and inter-regional problems.

4.2 Process Steps for MAPP Regional Plan Development. The TPSC shall prepare the MAPP Regional Plan as set forth in the MAPP Restated Agreement and this Attachment P and as detailed in the TPSC procedures. The TPSC uses milestone dates as established in the MAPP Regional Transmission Planning Procedures Manual for the following items:

4.2.1 TPSC Data Collection from Members (Annually)

(a) Ongoing studies of the SPG Member and Working Group.

(b) Subregional Plan Addendum report submitted to TPSC.

4.2.2 Data Analysis by TPSC (during the MAPP Regional Plan year):

(a) Analyze history of constrained interface performance.

(b) Analyze history of transmission loading relief requests.

(c) Review of reliability assessment studies and reports.

4.2.3 TPSC Model Preparation:

(a) Select base case models from appropriate MRO Model Series.

(b) Add Member and SPG plans to models.

(c) Solicit input from stakeholders including additions or changes to transmission, generation, and demand resources, in developing base-line assumptions and models.

(d) Validate firm transactions, major new loads, transmission and new generation.

4.2.4 TPSC Study Procedures:

(a) Evaluate base system with Member/SPG planned additions (local plans).

(b) Identify and evaluate alternative plans to meet regional and inter-regional reliability and market requirements (assess impacts on local plans).

(c) Utilize an appropriate combination of technical analysis and engineering judgment to determine preferred solutions when competing solution options proposed to meet system needs are received from a SPG. Technical analysis may include, but is not limited to, load flow (steady state, contingency and loss analysis), transient stability, voltage stability, small signal stability and economic analysis as deemed necessary by the SPG Members. Engineering judgment may include such factors as the extent to which proposed alternative solutions meet applicable planning criteria and other regulatory requirements, expected levels of public acceptance and projected environmental impacts.

(d) Perform cost analysis.

4.2.5 Regulatory Collaboration

(a) Regulatory participation at SPG and TPSC meetings.

(b) Regulatory input at preliminary planning stages.

(c) Process to address “why project needed” and “why it is better than other alternatives considered” through SPG Meeting process.

4.2.6 MAPP Regional Plan Report and Approval

(a) Submit MAPP Regional Plan Report to the RTC for approval of the MAPP Regional Plan year.

4.3 Updating the MAPP Regional Plan. The TPSC shall update or modify the MAPP Regional Plan between biennial planning cycles in accordance with the procedures below. This update to the MAPP Regional Plan, shall be issued to the RTC for approval. The established SPGs shall remain active in the planning process for their respective subregions. Individual utility Member Plans and detailed documentation should be submitted to the SPGs.

In order to accomplish this update process, the SPGs shall:

(a) review the individual utility Member Plans;

(b) coordinate the individual utility Member Plans within their subregion;

(c) evaluate the impacts of the individual Member Plans on their subregion and possibly require additional evaluation or study work;

(d) identify to the TPSC the proposed solution alternatives included in individual Member Plans or proposed by stakeholders in instances where there is no SPG consensus on a preferred alternative; and

(e) submit subregional plan modifications to the TPSC each off-year.

The TPSC shall:

(a) evaluate the subregional plan modifications for their impact on the MAPP Regional Plan;

(b) provide feedback to the SPGs regarding the regional impacts;

(c) utilize an appropriate combination of technical analysis and engineering judgment to determine preferred solutions when competing solution options proposed to meet system needs are received from a SPG. Technical analysis may include, but is not limited to, load flow (steady state, contingency and loss analysis), transient stability, voltage stability, small signal stability and economic analysis as deemed necessary by the SPG Members. Engineering judgment may include such factors as the extent to which proposed alternative solutions meet applicable planning criteria and other regulatory requirements, expected levels of public acceptance and projected environmental impacts; and

(d) approve or deny all final modifications to the MAPP Regional Plan each off-year.

Modifications to the MAPP Regional Plan may include: (a) commitments to new generation; (b) new transmission facilities; (c) changes in construction schedules; or (d) changes in project scope. All approved MAPP Regional Plan modifications must be included in the MRO Model building process and should be submitted to the MRO Model Building Subcommittee by the responsible transmission owning entity.

4.4 Identification of Transmission Requirements. The following process is used to communicate to the TPSC the transmission requirements identified by the Member and interested parties:

(a) Interested parties may contact the Member transmission provider in the area where service is required. If it is unclear as to who is the appropriate transmission provider, the interested parties should contact any member of the TPSC.

(b) The Member is required to take both the Member Plans and interested parties' plans to the appropriate SPGs. The SPG Guidelines indicate the required format Members are to use to submit the data.

(c) The SPGs must prepare coordinated subregional plans incorporating the member and interested parties' needs.

(d) The SPG plans are forwarded to the TPSC.

(e) The TPSC develops a coordinated MAPP Regional Plan addressing SPG, regional and inter-regional needs.

(f) The TPSC forwards the MAPP Regional Plan to the RTC for approval.

The TPSC will establish liaisons with existing neighboring regional planning entities to facilitate addressing inter-regional transmission issues.

5.0 <u>The Transmission Planning Subcommittee</u>

5.1 Procedures for Conduct of TPSC Meetings

5.1.1 TPSC Role. The MAPP TPSC, under the direction of the RTC, shall develop the MAPP Regional Plan. The TPSC shall utilize the following procedures in developing the MAPP Regional Plan. Costs incurred related to regional planning activities shall be recovered under the provisions of the MAPP Restated Agreement and related RTC policies.

5.1.2 TPSC Representatives. The TPSC shall be constituted as defined by the MAPP Restated Agreement. In accordance with the MAPP Restated Agreement, such Representatives shall be elected by the RTC, and the RTC sets the size, duties and responsibilities of the TPSC. The TPSC Representatives shall elect the TPSC Chair and Vice-Chair.

5.1.3 TPSC Meeting Notification. The notice of a TPSC meeting shall state the time and place of the meeting and shall include an agenda sufficient to notify an interested party of the substance of the matters considered at the

meeting. The TPSC meeting notice and agenda shall be sent at least 10 days prior to the meeting. All meeting notices are communicated electronically through MAPP e-mail distribution lists, and subsequently posted at www.mapp.org. All meeting notices shall be publicly available.

5.1.4 TPSC Meeting Agenda Development. The TPSC agenda shall include the time and place of its meetings. An interested party shall submit a request to the Chair and the Secretary of the TPSC to have an item considered at the next TPSC meeting at least fifteen (15) days in advance, subject to any limitations set forth in the TPSC procedures manual. The Chair of the TPSC has authority to determine action items for the meeting agenda. All action items shall be shown and communicated clearly so that any interested party can determine what is being acted upon.

The TPSC meeting agenda shall be posted at www.mapp.org and sent via the TPSC e-mail distribution list at least ten (10) days prior to the meeting. The TPSC will make the best effort attempt to communicate all supporting information for the meeting agenda at least ten (10) days prior to the meeting. The supporting information shall be posted on the www.mapp.org after communicating it via the e-mail distribution list, unless the information has been deemed CEII.

5.1.5 TPSC Action. The publication of an agenda of actions to be voted upon by the TPSC shall include the wording of any proposed motion, and a brief discussion, as needed, of the reasons for the motion to be offered and voted. The member of the TPSC or other entity sponsoring the motion shall provide the wording of the motion and the discussion points. A best effort attempt shall be made by those sponsoring items on a TPSC meeting agenda to have background material, and the action to be voted, distributed with the meeting agenda in a timely manner. In general, an action may not be brought to a vote of the TPSC unless it is noticed on a published agenda at least ten (10) days prior to the meeting date upon which action is to be voted. This requirement for a 10-day notice may be waived either by the approval of the TPSC Chair or by 90% affirmative vote of the TPSC's voting members present at a TPSC meeting at which a quorum has been established, subject to any limitations set forth in the TPSC procedures.

5.1.6 TPSC Meeting Procedures. The TPSC shall utilize Robert's Rules of Order for guidance regarding conduct of subcommittee meetings. A quorum is necessary to conduct TPSC business. A quorum is established when 50 percent or more of TPSC Representatives are present as currently stated in the MAPP Restated Agreement. A vacant position on the TPSC does not count towards the quorum requirement. All interested parties can

attend TPSC and working group meetings subject to signing a MAPP non-disclosure agreement.

5.1.7 Affirmative Votes. Actions or decisions by a subcommittee requires an affirmative vote of two-thirds of both the TPSC Transmission Owning Members and the Transmission Using Members as set forth in the MAPP Restated Agreement.

5.1.8 TPSC Meeting Minutes. All TPSC meetings shall be recorded through accurate and timely meeting minutes. Draft TPSC meeting minutes shall be distributed to TPSC Representatives ten (10) business days following the meeting date for review and comment. The TPSC will attempt to approve their previous meeting's minutes at their next meeting. Once the meeting minutes are approved by the TPSC, the minutes are sent to the TPSC and RTC e-mail distribution lists and posted at www.mapp.org.

5.1.9 Review of TPSC Action. An RTC Member or Regulatory Participant may request a review of TPSC actions, in accordance with the MAPP Restated Agreement.

5.2 TPSC Responsibilities. The TPSC shall:

(a) develop and recommend for approval by the RTC the biennial MAPP Regional Plan required by the MAPP Restated Agreement;

(b) develop procedures and policies for updating and modifying the MAPP Regional Plan between biennial planning cycles, and approve modifications to the MAPP Regional Plan;

(c) develop and approve procedures, standards and requirements for the communication of the future transmission requirements of Members and interested parties to the appropriate Transmission Owning Members, and for the inclusion of bona fide requirements in the transmission Member Plans of the Transmission Owning Members, and in the MAPP Regional Plan.

(d) establish procedures, standards and requirements for the coordination of the transmission Member Plans of the Transmission Owning Members with the plans of neighboring transmission systems, including establishing of subregional planning groups for resolution of subregional planning issues on a cooperative basis;

(e) establish procedures, standards, and requirements for making available Member Plans and the information on which the Member Plans are based, as required by the MAPP Restated Agreement;

(f) establish procedures, standards and requirements for public input, including input from Regulatory Participants, in the development of the MAPP Regional Plan;

(g) determine, subject to RTC approval, the appropriate Member or Members to construct and own, or to receive Rights Equivalent to Ownership in, transmission facilities;

(h) coordinate with the subcommittees of the RTC, the MRO and Adjacent Systems pertinent to reliability issues, standards, requirements, procedures, models and studies, and conduct or request the MRO to conduct such studies as appropriate to carry out the responsibilities of the TPSC;

(i) conduct appropriate transmission economic planning studies;

(j) conduct appropriate transmission cost allocation analysis for new projects;

(k) assume responsibility for submission of FERC Form 715 information for MAPP;

(l) conduct transmission adequacy and security assessments as appropriate, including assessments of the intra- and inter-regional transfer capability of the MAPP system,

(m) oversee the duties and responsibilities of Working Groups; and

(n) utilize an appropriate combination of technical analysis and engineering judgment to determine preferred solutions when competing solution options proposed to meet system needs are received from a SPG.

5.3 Transmission Customer Responsibilities. Transmission Customers in the RTC region shall provide annually to the Transmission Provider the following types of information:

(a) Generators: All planned additions or upgrades (including status and expected in-service date), planned retirements, and environmental restrictions.

(b) Demand Response Resources: Existing and planned demand resources and their impacts on demand and peak demand.

(c) Network Customers: Forecast information for load and resource requirements over the planning horizon and identification of demand response reductions.

(d) Point-to-Point Transmission Customers: Projections of need for service over the planning horizon, including transmission capacity, duration, and receipt and delivery points.

(e) Transmission Customers should provide the Transmission Provider with timely written notice of material changes in any information previously provided relating to its load, its resources, or other aspects of its facilities or operations affecting the transmission provider's ability to provide service.

6.0 Sub-regional Planning Groups

6.1 Current SPGs. The TPSC has established and recognized the following SPGs to carry out the task of coordinating transmission plans among Members:

(a) Northern MAPP;

(b) Missouri Basin;

(c) Iowa Transmission Working Group;

(d) Nebraska.

6.2 Establishment of SPGs. The TPSC can establish new or recognize additional SPGs to carry out the task of coordinating transmission plans among Members. The TPSC may also recognize and coordinate its MAPP Regional Plan with existing or future transmission planning study groups concerned with transmission facilities located outside the MAPP region.

6.3 SPG Membership. Membership in a SPG is open to any interested party and any actual or potential user of the relevant transmission facilities. Participation in any SPG meeting is open to any interested party who has signed the MAPP Non-Disclosure Agreement (NDA). A MAPP NDA is obtained by contacting the Secretary of the MAPP TPSC. Neighboring transmission owning utilities and regulatory participants are eligible and encouraged to join the SPG to promote joint planning between MAPP and its neighboring regions.

6.4 SPG Guidelines. The Subregional Planning Groups, to the extent possible, should:

(a) develop a coordinated Subregional Plan, the SPG Biennial Plan, including alternatives, for the ensuing ten years, for all transmission facilities in the subregion at a voltage of 115 kV or greater;

(b) review and comment on proposed Member Plans for additions and modifications to the subregional transmission system;

(c) incorporate proposed Member load-serving plans to the subregional transmission system into the SPG Biennial Plan;

(d) incorporate Member Plans for new generator connections and associated network upgrades into the SPG Biennial Plan as soon as practicable;

(e) coordinate the Subregional Plans of the SPG with the Subregional Plans of neighboring SPGs;

(f) update the SPG Biennial Plan as deemed necessary by the SPG or the TPSC;

(g) form technical study task forces as required to carry out the subregional planning responsibilities;

(h) encourage non-MAPP member participation to ensure that the TPSC and the SPGs learn of facility changes outside MAPP's system to ensure the impact of parallel path flows are considered in the planning studies;

(i) encourage participation by stakeholders so that the SPG can consider and incorporate the future transmission needs of the stakeholder into the Subregional Plan;

(j) ensure SPG studies meet NERC/MRO Planning Standards and requirements; and

(k) promote stakeholder and Regulatory Participant review and comment on the Subregional Plan and its development.

6.5 Submission of Member Plans to SPG. Each Transmitting Utility Member, as that term is defined in the MAPP Restated Agreement, shall submit its transmission plans to the SPG in which its system is geographically located, or SPGs in situations where its system crosses several SPG boundaries. The TPSC requires that all Members submit their individual Member Plans to the appropriate SPG. Each SPG member must be willing to participate in joint SPG studies to assess the adequacy of proposed Member Plans to best meet the needs of the subregion. The TPSC will not be in a position to support the transmission Member Plans of any Member who does not make such Member Plans available to the SPG.

6.6 Network Upgrades Out of Planning Cycle. When planned transmission upgrades are identified by a Member outside the timing requirements of the Regional Plan (including any network upgrades needed for generation interconnection or transmission service):

- The Member will submit information about the upgrades at the next SPG meeting and the next TPSC meeting to make every reasonable effort to allow for stakeholder input on such upgrades before those upgrades go in-service.

- The Member will include those upgrades in their next Member Plan.

6.7 SPG Meetings. Each SPG should meet at least twice annually to review plans and determine what changes, if any, need to be made to coordinate Member Plans among Members. Participation in any SPG meeting is open to any interested party who has signed the MAPP NDA. Meeting notices are posted on the MAPP calendar at www.mapp.org. Recommendations carried forward to the TPSC by the SPG should reflect a consensus of the SPG members. However, a SPG member also has the right to reflect a minority opinion in any report to the TPSC. The notice of SPG meetings are to be sent out by the SPG TPSC liaison person, the SPG Chair, or SPG Secretary to the SPG Membership via the SPG and TPSC exploder email list. Other stakeholders, such as interested parties, that request meeting notification shall also be sent a meeting notice. In addition, the meetings are posted on the MAPP website under the calendar of MAPP meetings. The notice shall state the time and place of the meeting, and shall include an agenda sufficient to notify Members of the substance of matters to be considered at the meeting. Additionally, the appropriate subregional Regulatory Participants, who are not SPG Members or may not be subscribed to the SPG and TPSC exploders list, are to be sent a meeting notice.

6.8 TPSC/SPG Communication. Each recognized SPG shall appoint a liaison to the TPSC to facilitate communication of the planning process. The liaison person can be any SPG member including an elected TPSC member. The form of communication the TPSC expects from the SPG includes: (a) SPG Meeting Agendas; (b) SPG final approved Meeting Minutes; and (c) SPG liaison status reports to the TPSC at the scheduled meetings. The SPG meeting agendas and approved minutes should be electronically sent to the TPSC Secretary for posting on the MAPP website in the RTC/TPSC area. The SPG status reports are given by the TPSC liaison at the scheduled TPSC meetings.

6.9 SPG Planning Responsibilities. The SPG shall develop a coordinated subregional transmission plan (the SPG Plan), including alternatives, for the ensuing ten years, for all transmission facilities in the subregion at a capacity of 115 kV or greater. This SPG Plan shall be submitted to the TPSC biennially, each even numbered or MAPP Regional Plan year. The SPG shall update and modify the SPG Plan, as

required, between biennial planning year cycles and submit these modifications to the TPSC for approval. The Subregional Plan should:

(a) identify load serving problems in the subregion;

(b) identify constrained interface problems within the subregion and with neighboring subregions and regions;

(c) identify transmission needs for new generation;

(d) propose and study transmission expansion alternatives to address these problems and needs;

(e) recommend the preferred alternatives which best address the subregional requirements to the TPSC;

(f) forward alternative proposed solutions to the TPSC for the evaluation and determination of preferred plan options for inclusion in the MAPP Regional Plan in the absence of consensus agreement by a SPG on the selection of preferred plan options;

(g) address subregional deficiencies identified in the MAPP Regional Plan; and

(h) provide feedback assessment of impacts of the published MAPP Regional Plan on the subregion.

6.10 Planning Criteria. The MAPP Restated Agreement states that each Member's plan shall conform to applicable reliability standards and requirements, and to applicable methods and assessment practices and other transmission planning standards and requirements established by the RTC. In this context, the Subregional Plan shall conform to the requirements of the MAPP Members Reliability Criteria and Study Procedures Manual and the NERC and MRO Planning Standards. In instances where these Standards are different, the more stringent Standard shall be adopted. Such criteria and standards are available at www.mapp.org.

6.11 SPG Study Models. Whenever possible, the SPGs shall adopt the most current approved regional model series to develop their base case study models. Each series provides near term, five-year and ten-year models representing summer peak, summer off-peak and winter peak system conditions. The SPG shall determine the appropriate load conditions (summer peak, summer off-peak, winter peak, etc.) and generation schedules for the SPG studies. The SPG shall verify that the load data, new generation data, and all existing firm transactions in the subregion are included and correct. In developing the base case load flow models

to be used for the SPG studies, the SPG shall document all modifications required to load flow cases. The SPGs may add underlying transmission detail to these models as required. The SPG shall solicit input from stakeholders including additions or changes to transmission, generation, and demand resources, in developing base-line assumptions and models used in developing the SPG Plan. The SPG may, if appropriate, adopt other models to conduct its studies. However, the SPG shall develop and provide the TPSC with appropriate files to facilitate incorporation of the Subregional Plan study data into the next regional model series that will be used by the TPSC.

6.12 SPG Studies and Reports. A report summarizing the results of the Member and SPG Working Group studies shall be provided for review and consensus approval of the SPG, prior to adopting the plans of Members or the SPG study groups into the Subregional Plan. The SPG shall require its Members or its SPG Study Groups to perform system studies to demonstrate that the performance of the proposed Member and Subregional Plans meets the planning standards defined above. These studies may include, but not necessarily be limited to load flow (steady state, contingency and loss analysis), transient stability, voltage stability, small signal stability and economic analysis as deemed necessary by the SPG Members.

6.13 Subregional Plan Report to the TPSC. The Subregional Plan, or modifications to the SPG Plan, shall be provided to the TPSC each year. A report shall be provided describing the Subregional Plan. This report shall include the following information:

(a) an executive summary (to be incorporated into the MAPP Regional Plan report);

(b) a description of needs being addressed;

(c) a description of the alternatives considered;

(d) recommendations as to which alternatives should be included in the MAPP Regional Plan;

(e) a description of alternative plan options in the absence of consensus SPG agreement on preferred solutions;

(f) a brief description of the SPG studies, including costs, supporting the recommendations, with reference to the detailed SPG study report;

(g) a description of the new facilities; and

(h) a description of the Public Input/Review Process.

7.0 Public Input Process

7.1 Stakeholder Participation. The TPSC shall invite Members, interested parties, any actual or potential users of the relevant transmission facilities, and neighboring transmission owning utilities (referred to collectively as "stakeholders"), as well as Regulatory Participants, to be part of the planning process. The SPG shall invite such stakeholders to SPG meetings as part of the public input process into the Subregional Plan. The SPG shall:

(a) identify and maintain a list of stakeholders involved in the review and comment on additions to the Transmission System in their subregion;

(b) add stakeholders to the appropriate SPG email exploder lists following their requests to MAPPCOR planning staff to participate;

(c) verify that stakeholders have signed the MAPP NDA for attendance at the meetings where CEII material is discussed;

(d) identify comparable contacts from interconnected NERC regions;

(e) coordinate with stakeholders as to the process required, areas of needs, and possible solutions;

(f) review the solutions with stakeholders to identify the best options from a transmission and regulatory basis for that subregion to include in the Subregional Plan; and

(g) report to the TPSC and include in the Subregional Plan documentation of the public process completed for the Subregional Plan such as dates of meetings, number of stakeholders, highlights of key comments and SPG consideration of those comments. The SPG shall include in their Subregional Plan report to the TPSC a listing of the suggestions for economic planning studies that they received from their stakeholders during the year.

7.2 Regulatory Participation. The TPSC shall encourage and facilitate input from Regulatory Participants, in the development of the MAPP Regional Plan. The SPGs, as part of the formal process for regulatory participation, shall:

(a) Maintain a list of Regulatory Participants involved in the review and approval of additions to the Transmission System in their subregion.

(b) Maintain a list of comparable contacts from interconnected regions.

(c) Coordinate with the Regulatory Participants as to the process required, areas of needs, and possible solutions. Review the solutions with such participants to identify the best options from a transmission and regulatory basis for that subregion to include in the MAPP Regional Plan.

(d) Describe in the Subregional Plan how the proposed facilities address the needs, and identify the Regulatory Participants involved in the Subregional Plan development and what future regulatory approvals are required for development of facilities in the Subregional Plan.

The TPSC, as part of the formal process for the regulatory participation, shall:

(a) maintain a list of Regulatory Participants involved in the review and approval of additions to the Transmission System for each SPG;

(b) report in the MAPP Regional Plan the input of the Regulatory Participants obtained in developing the MAPP Regional Plan;

(c) present the results of the MAPP Regional Plan and the needed facilities to the RTC;

(d) work with the Members and SPGs on final approvals for needed projects as required and coordinate any regional information that needs to be disseminated;

(e) make the MAPP Regional Plan available to the public and regulatory community subject to applicable CEII restrictions; and

(f) as required, sponsor information seminars to facilitate regulatory and public acceptance of the MAPP Regional Plan.

8.0 Inter-regional Planning Coordination

The TPSC shall coordinate on planning issues with: (1) the subcommittees of the RTC; (2) the MRO; (3) relevant non-MAPP neighboring transmission owning utilities and Regional Transmission Organizations ("RTOs").

The TPSC will select a TPSC member who will be responsible for reporting on the relevant activities of the MAPP RTC, MRO and RTO subcommittees at each TPSC meeting. The TPSC liaison may attend the MAPP RTC, MRO and neighboring RTO subcommittee meetings or employ other effective means to obtain the required information.

8.1 Coordination Principles. The MAPP Regional Plan shall be developed in accordance with the principles of interregional coordination through collaboration with representatives from neighboring regions, or their applicable sub-regions,

including adjacent transmission providers or regional transmission organizations, or their designated regional planning organization(s).

8.2 Joint Planning Committee. MAPP shall participate in a Joint Planning Committee ("JPC") with representatives of adjacent transmission providers or regional transmission organizations, or their designated regional planning organizations(s) ("Regional Planning Coordination Entities" or "RPCEs"). The JPC shall be comprised of representatives of MAPP and the RPCE(s) in numbers and functions to be identified from time to time. The JPC may combine with or participate in similarly established joint planning committees amongst multiple RPCEs or established under joint agreements to which MAPP is a signatory, for the purpose of providing for broader and more effective inter-regional planning coordination. The JPC shall have a Chairman. The Chairman shall be responsible for: the scheduling of meetings; the preparation of agendas for meetings; the production of minutes of meetings; and for chairing JPC meetings. The Chairmanship shall rotate amongst MAPP and the RPCEs on a mutually agreed to schedule, with each party responsible for the Chairmanship for no more than one planning study cycle in succession. The JPC shall coordinate planning of the systems of the Western Area Power Administration's Upper Great Plains Customer Service Region and the RPCEs, including the following:

8.2.1 Coordinate the development of common power system analysis models to perform coordinated system planning studies including power flow analyses and stability analyses. For studies of interconnections in close electrical proximity at the boundaries among the systems of MAPP and the RPCEs, the JPC or its designated working group will coordinate the performance of a detailed review of the appropriateness of applicable power system models.

8.2.2 Conduct, on a regular basis, a Coordinated Regional Transmission Planning Study ("CRTPS"), which shall be reviewed by stakeholders, as set forth in Section 8.4.1.

8.2.3 Coordinate planning activities under this section 8, including the exchange of data and developing necessary report and study protocols.

8.2.4 Maintain an Internet site and e-mail or other electronic lists for the communication of information related to the coordinated planning process. Such sites and lists may be integrated with those existing for the purpose of communicating the open and transparent planning processes of MAPP.

8.2.5 Meet at least semi-annually to review and coordinate transmission planning activities.

8.2.6 Establish working groups as necessary to address specific issues, such as the review and development of the regional plans of the RPCE and MAPP, and localized seams issues.

8.2.7 Establish a schedule for the rotation of responsibility for data management, coordination of analysis activities, report preparation, and other activities.

8.3 Data and Information Exchange. MAPP shall make available to each RPCE the following planning data and information. Unless otherwise indicated, such data and information shall be provided annually. MAPP shall provide such data in accordance with the applicable CEII policy, and maintain data and information received from each RPCE in accordance with their applicable confidentiality policies.

8.3.1 Data required for the development of power flow cases, and stability cases, incorporating up to a ten year load forecasts as may be requested, including all critical assumptions that are used in the development of these cases.

8.3.2 Fully detailed planning models (up to the next ten (10) years as requested) on an annual basis and updates as necessary to perform coordinated studies that reflect system enhancement changes or other changes.

8.3.3 The regional plan documents, any long-term or short-term reliability assessment documents, and any operating assessment reports produced by MAPP and the RPCE.

8.3.4 The status of expansion studies, system impact studies and generation interconnection studies, such that MAPP and the RPCE have knowledge that a commitment has been made to a system enhancement as a result of any such studies.

8.3.5 Transmission system maps for MAPP and the RPCE bulk transmission systems and lower voltage transmission system maps that are relevant to the coordination of planning between or among the systems.

8.3.6 Contingency lists for use in load flow and stability analyses, including lists of all contingency events required by applicable NERC or Regional Entity planning standards, as well as breaker diagrams, as readily available, for the portions of the MAPP and the RPCE transmission systems that are relevant to the coordination of planning between or among the systems. Breaker diagrams to be provided on an as requested basis.

8.3.7 The timing of each planned enhancement, including estimated completion dates, and indications of the likelihood that a system enhancement will be

completed and whether the system enhancement should be included in system expansion studies, system impact studies and generation interconnection studies, and as requested the status of related applications for regulatory approval. This information shall be provided at the completion of each planning cycle of MAPP, and more frequently as necessary to indicate changes in status that may be important to the RPCE system.

8.3.8 Quarterly identification of interconnection requests that have been received and any long-term firm transmission services that have been approved, that may impact the operation of MAPP or the RPCE system.

8.3.9 Quarterly, the status of all interconnection requests that have been identified.

8.3.10 Information regarding long-term firm transmission services on all interfaces relevant to the coordination of planning between or among the systems.

8.3.11 Load flow data initially will be exchanged in PSS/E format. To the extent practical, the maintenance and exchange of power system modeling data will be implemented through databases. When feasible, transmission maps and breaker diagrams will be provided in an electronic format agreed upon by the Transmission Provider and the RPCE. Formats for the exchange of other data will be agreed upon by MAPP and the RPCE.

8.4 Coordinated System Planning. MAPP shall agree to coordinate with the RPCEs studies required to assure the reliable, efficient, and effective operation of the transmission system. Results of such coordinated studies will be included in the Coordinated System Plan. MAPP shall agree to conduct with the RPCEs such coordinated planning as set forth below.

8.4.1 Stakeholder Review Processes. MAPP, in coordination with coordinating RPCEs shall review the scope, key modeling assumptions, and preliminary and final results of the CRTPS with impacted stakeholders, and shall modify the study scope as deemed appropriate by MAPP in agreement with the coordinating RPCEs, after receiving stakeholder input. Such reviews will utilize the existing planning stakeholder forums of the coordinating parties including as applicable joint Sub Regional Planning Meetings.

8.4.2 Single Entity Planning. MAPP shall engage in such transmission planning activities, including expansion plans, system impact studies, and generator interconnection studies, as necessary to fulfill its obligations under the MAPP Restated Agreement and any other MAPP transmission planning

procedures. Such planning shall conform to applicable reliability requirements of NERC, applicable regional reliability councils, and any successor organizations thereto. Such planning shall also conform to any and all applicable requirements of Federal or State regulatory authorities. MAPP will prepare a regional transmission planning report that documents the procedures, methodologies, and business rules utilized in preparing and completing the report. MAPP shall agree to share the transmission planning reports and assessments with each RPCE, as well as any information that arises in the performance of its individual planning activities as is necessary or appropriate for effective coordination among MAPP and the RPCEs on an ongoing basis. MAPP shall provide such information to the RPCEs in accordance with the applicable CEII policy and shall maintain such information received from the RPCEs in accordance with their applicable confidentiality policies.

8.4.3 Analysis of Interconnection Requests. In accordance with the procedures under which a MAPP Transmission Provider provides interconnection service, MAPP will agree to coordinate with each RPCE the conduct of any studies required in determining the impact of a request for generator or merchant transmission interconnection. Results of such coordinated studies will be included in the impacts reported to the interconnection customers as appropriate. Coordination of studies shall include the following:

8.4.3.1 When the Transmission Provider receives a request under its interconnection procedures for interconnection, it will determine whether the interconnection potentially impacts the system of a RPCE. In that event, the Transmission Provider will notify the RPCE and convey the information provided in the interconnection queue posting. The Transmission Provider will provide the study agreement to the interconnection customer in accordance with applicable procedures.

8.4.3.2 If the RPCE determines that it may be materially impacted by an interconnection on the Transmission Provider's system, the RPCE may request participation in the applicable interconnection studies. The Transmission Provider will coordinate with the RPCE with respect to the nature of studies to be performed to test the impacts of the interconnection on the RPCE System, and who will perform the studies. The Transmission Provider will strive to minimize the costs associated with the coordinated study process undertaken by agreement with the RPCE.

8.4.3.3 Any coordinated studies associated with requests for interconnection to the Transmission Provider's system will be

performed in accordance with the study timeline requirements and scope of the applicable generation interconnection procedures of Western.

8.4.3.4 The RPCE may participate in the coordinated study either by taking responsibility for performance of studies of its system, if deemed reasonable by the Transmission Provider, or by providing input to the studies to be performed by the Transmission Provider. The study cost estimates indicated in the study agreement between Transmission Provider and the interconnection customer, will reflect the costs, and the associated roles of the study participants including the RPCE. The Transmission Provider will review the cost estimates and scope submitted by all participants for reasonableness, based on expected levels of participation, and responsibilities in the study. If the RPCE agrees to perform any aspects of the study, the RPCE must comply with the timelines and schedule of Western's interconnection procedures.

8.4.3.5 The Transmission Provider will collect from the interconnection customer the costs incurred by the RPCE associated with the performance of such studies and forward collected amounts, no later than thirty (30) days after receipt thereof, to the RPCE. Upon the reasonable request of the RPCE, the Transmission Provider will make its books and records available to the requestor pertaining to such requests for collection and receipt of collected amounts.

8.4.3.6 The Transmission Provider will report the combined list of any transmission infrastructure improvements on either the RPCE and/or the Transmission Provider's system required as a result of the proposed interconnection.

8.4.3.7 Construction and cost responsibility associated with any transmission infrastructure improvements required as a result of the proposed interconnection shall be accomplished under the terms of Western's tariff under which the transmission service is provided, consistent with applicable Federal or State regulatory policy and applicable law.

8.4.3.8 Each transmission provider will maintain a separate interconnection queue. The JPC will maintain a composite listing of interconnection requests for all interconnection projects that have been identified as potentially impacting the systems of MAPP and coordinating RPCEs. The JPC will post this listing

on the Internet site maintained for the communication of information related to the coordinated system planning process.

8.4.4 Analysis of Long-Term Firm Transmission Service Requests. In accordance with applicable procedures under which the Transmission Provider provides long-term firm transmission service, Transmission Provider will coordinate the conduct of any studies required to determine the impact of a request for such service. Results of such coordinated studies will be included in the impacts reported to the transmission service customers as appropriate. Coordination of studies will include the following:

8.4.4.1 The Transmission Provider will coordinate the calculation of ATC values, if any, associated with the service, based on contingencies on their systems that may be impacted by the granting of the service.

8.4.4.2 When Transmission Provider receives a request for long-term firm transmission service, it will determine whether the request potentially impacts the system of the RPCE. If Transmission Provider determines that the RPCE system is potentially impacted, and that the RPCE would not receive a transmission service request to complete the service path, Transmission Provider will notify the RPCE and convey the information provided in the posting.

8.4.4.3 If the RPCE determines that its system may be materially impacted by granting the service, it may contact Transmission Provider and request participation in the applicable studies. The Transmission Provider will coordinate with the RPCE with respect to the nature of studies to be performed to test the impacts of the requested service on the RPCE system, and will strive to minimize the costs associated with the coordinated study process. The JPC will develop screening procedures to assist in the identification of service requests that may impact systems of the JPC members other than the Transmission Provider.

8.4.4.4 Any coordinated studies for request on Transmission Provider's system will be performed in accordance with the study timeline and scope requirements of the applicable transmission service procedures of the Transmission Provider.

8.4.4.5 The RPCE may participate in the coordinated study either by taking responsibility for performance of studies of its system, if deemed reasonable by the Transmission Provider or by providing

input to the studies to be performed by Transmission Provider. The study cost estimates indicated in the study agreement between Transmission Provider and the transmission service customer will reflect the costs and the associated roles of the study participants. Transmission Provider will review the cost estimates and scope submitted by all participants for reasonableness, based on expected levels of participation and responsibilities in the study.

8.4.4.6 Transmission Provider will collect from the transmission service customer, and forward to the RPCE, the costs incurred by the RPCE with the performance of such studies.

8.4.4.7 Transmission Provider will identify any transmission infrastructure improvements required as a result of the transmission service request.

8.4.4.8 Construction and cost responsibility associated with any transmission infrastructure improvements required as a result of the transmission service request shall be accomplished under the terms of Western's Open Access Transmission Tariff.

8.4.5 Coordinated Transmission Planning. MAPP agrees to participate in the conduct of a periodic Coordinated Regional Transmission Planning Study ("CRTPS"). The CRTPS shall have as input the results of ongoing analyses of requests for interconnection and ongoing analyses of requests for long-term firm transmission service. The Parties shall coordinate in the analyses of these ongoing service requests in accordance with sections 8.4.3 and 8.4.4. MAPP, in coordination with coordinating RPCEs, shall review the scope, preliminary results and final results of the CRTPS with impacted stakeholders, in accordance with section 8.4.1 and this section. The results of the CRTPS shall be an integral part of the expansion plans of each Party. Construction of upgrades on the Transmission System of the Transmission Provider identified as necessary in the CRTSP shall be under the terms of the applicable Western documentation applicable to the construction of upgrades identified in the expansion planning process. Coordination of studies required for the development of the Coordinated System Plan will include the following:

8.4.5.1 Every three years, MAPP shall participate in the performance of a CRTPS. Sensitivity analyses will be performed, as required, during the off years based on a review by the JPC of discrete reliability problems or operability issues that arise due to changing system conditions.

8.4.5.2 The CRTPS shall identify all reliability and expansion issues, and shall propose potential resolutions to be considered by MAPP and the coordinating RPCEs.

8.4.5.3 As a result of participation in the CRTPS, neither MAPP nor its members are obligated in any way to construct, finance, operate, or otherwise support any transmission infrastructure improvements or other transmission-related projects identified in the CRTPS. Any decision to proceed with any transmission infrastructure improvements or other transmission-related projects identified in the CRTPS shall be based on the applicable reliability, operational and economic planning criteria established for MAPP as applicable to the development of the MAPP Regional Plan and set forth in this Attachment P.

8.4.5.4 As a result of participation in the CRTPS, the RPCEs are not entitled to any rights to financial compensation due to the impact of the transmission plans of MAPP upon the RPCE system, including but not limited to its decisions whether or not to construct any transmission infrastructure improvements or other transmission-related projects identified in the CRTPS.

8.4.5.5 The JPC will develop the scope and procedure for the CRTPS. The scope of the CRTPSs performed over time will include evaluations of the transmission systems against reliability criteria, operational performance criteria, and economic performance criteria applicable to MAPP and the RPCEs.

8.4.5.6 In the conduct of the CRTPS, MAPP and the coordinating RPCEs will use planning models that are developed in accordance with the procedures to be established by the JPC. Exchange of power flow models will be in a format that is acceptable to the coordinating parties.

9.0 Member Plans

The procedures, standards and requirements for making available Members' transmission plans ("Member Plans") and the information on which the Member Plans are based, as required by the MAPP Restated Agreement. Members may submit information to the TPSC individually, but submittals through the SPGs are preferred. The SPGs provide a forum for members to continue their long-term joint planning relationships with their neighbors, and involve regulatory staff. The Member Plans will be integrated into the SPG Subregional Plan.

The Subregional Plan reports, and subsequent updates, are submitted to the TPSC as part of the MAPP Regional Plan. Additionally, the MAPP Regional Plan will provide an executive

summary report of the Member and SPG plans showing the anticipated transmission expansions in the region. Detailed Member planning reports are referenced in the Subregional Plan. Such reports typically provide details of economic evaluations, extensive alternative evaluations and supporting technical studies and minority opinions if consensus is not reached.

10.0 Dispute Resolution

All substantive and procedural disputes related to the MAPP Regional Planning Process shall be resolved in accordance with the dispute resolution procedures set forth in the MAPP Restated Agreement. Disputes related to local planning issues shall be resolved in accordance with the dispute resolution procedures set forth in this Tariff.

11.0 Economic Planning Studies

The TPSC shall evaluate limitations on MAPP transfer capability through historical Transmission Loading Relief ("TLR") analysis associated with the defined flowgates in the MAPP region. The TPSC shall utilize these comprehensive reviews to determine transmission constraints in the region. The TPSC shall also support economic studies necessary to review the integration of large proposed generation facilities to the regional grid and shall develop concept plans as part of regional study efforts.

The TPSC may also commission SPGs and joint SPGs to address highly constrained regional flowgates and to develop proposed plans for increasing inter-regional transfer capability. SPGs may also perform regional transfer capability analysis and develop exploratory transmission expansion plans to address the most limiting flowgates within their SPG region. The TPSC may also coordinate and support other joint exploratory economic planning efforts within and adjacent to the RTC Region.

In addition to these types of studies, stakeholders, through the TPSC, may request that the TPSC perform economic planning studies to evaluate potential upgrades or other investments that could reduce congestion or integrate new transmission, generation or demand resources and loads on an aggregated or regional basis. The TPSC shall review such proposals and select a certain number for study each year.

The TPSC may cluster or batch requests for economic planning studies so the TPSC can perform the studies in the most efficient manner. Requests for studies shall be submitted to the chairman of the TPSC. All such requests will be collected over a 12 month period ending January 1 of each year. The TPSC (with stakeholder input) will commit and engage to address up to five requests per year. The TPSC will attempt to combine the scope of such requests such that the scope of actual study work will adequately address multiple requests, so as not to exceed three studies. Requesting parties would be required to submit essential data for their requested study.

As part of this process, the TPSC may also consider economic studies of upgrades to MAPP flowgates. The flowgates studied will be selected among those determined to have recurring congestion, as evidenced by a high number of hours per year with no available firm Available

Flowgate Capacity ("AFC") or a high number of historical hours per year under Transmission Loading Relief ("TLR"). Along with stakeholder input, the TPSC will use these or similar metrics to determine which MAPP flowgates are most congested and warrant study of the economic benefits of proposed flowgate upgrades. Any economic planning study, which identifies a new MAPP region transmission facility or the upgrade of an existing transmission facility as a proposed Economic Network Upgrade, shall identify the proposed upgrade subject to the cost allocation principles set forth in Section 12 of this Attachment P. Such economic study shall also include a benefit allocation analysis based on one or more of the following principles: (a) reductions in projected congestion costs; (b) reductions in projected energy costs; or (c) reductions in projected transmission losses.

The economic planning studies performed by the TPSC shall include sensitivity analyses representing various generation price scenarios; however, the TPSC shall study the cost of congestion only to the extent it has information to do so. If a stakeholder requests that a particular congested area be studied, it must supply relevant data within its possession to enable the TPSC to calculate the level of congestion costs that is occurring or is likely to occur in the near future.

12.0 Cost Allocation

12.1 Categories of Projects. The TPSC will identify cost responsibility on a regional and subregional basis for Network Upgrades identified in the MAPP Regional Plan for reliability and economic projects subject to any grandfathered project provisions from pre-existing agreements. There will be three categories of projects:

12.1.1 Baseline Reliability Projects (BRP). BRPs are Network Upgrades identified in the base case as required to ensure that the Transmission System is in compliance with applicable NERC and MRO Reliability Standards.

12.1.2 New Transmission Access Projects. New Transmission Access Projects are defined as Network Upgrades identified in Facilities Studies and agreements pursuant to requests for transmission delivery service or transmission interconnection service under Western's Tariff. New Transmission Access Projects include projects that are needed to accommodate the incremental needs associated with requests for new transmission or interconnection service, as determined in Facilities Studies associated with such requests. New Transmission Access Projects are either Generation Interconnection Projects or Transmission Service Projects.

12.1.2.1 Generation Interconnection Projects. Generation Interconnection Projects are New Transmission Access Projects that are associated with either the interconnection of new

generation, or an increase in the generating capacity of existing generation, under Western's Tariff.

12.1.2.2 Transmission Service Projects. Transmission Service Projects are New Transmission Access Projects that are needed to provide for requests for new Point-To-Point Transmission Service, or requests under Western's Tariff for Network Service or a new designation of a Network Resource(s).

12.1.3 Regionally Beneficial Projects (RBP). A RBP is a transmission network upgrade that shall be: (a) proposed in accordance with the MAPP Planning Process; (b) found to be eligible for inclusion in the MAPP Regional Plan; (c) determined not to be a New Transmission Access Project; and (d) found to have regional benefits. RBPs may include projects that expand the scope of a project that would otherwise qualify as a Baseline Reliability Project.

12.2 Cost Allocation. The allocation rules for these projects are as follows:

12.2.1 Allocation of Baseline Reliability Project Costs. Each transmission owner is obligated to construct and/or upgrade those BRP facilities required to meet NERC and MRO Reliability Standards associated with serving its native load customers and to meet its firm transmission commitments. Costs associated with a single Transmission Provider facility addition shall be recovered through Western's rate recovery method. Costs associated with BRP involving multiple transmission owners shall be shared among the affected transmission owners in accordance with this principle, subject to those transmission owners' respective interconnection agreements.

12.2.2 New Transmission Access Projects. New Transmission Access Projects may consist of a number of individual facilities that constitutes a single project for cost allocation purposes. Cost allocation methods applicable to specific requests for interconnection and transmission service under Western's Tariff shall be used for new Transmission Access Projects.

12.2.3 Allocation Rules for RBPs. The MAPP Regional Plan shall classify transmission projects as described above. Any economic planning study authorized by the MAPP RTC for a RBP and performed in compliance with Section 11 of this Attachment P, which identifies the need for a new MAPP region transmission facility or the upgrade of an existing transmission facility as a proposed Economic Network Upgrade, shall treat such proposed facility upgrade(s) as commercial transmission.

This procedure ("Auction Procedure") describes the process by which the MAPP transmission owner on whose transmission system the Economic

Network Upgrade is located (Host TO) shall solicit participation for the proposed Economic Network Upgrade. The MAPP transmission owner shall have the right to elect to be an Affected System and not serve as the Host TO, provided that the MAPP RTC identifies another qualified transmission owner, including a consortium of transmission owners and/or independent transmission owners, as the Host TO. A transmission owner that has protested a project as causing undue burden, which has not been satisfactorily resolved, has the option to decline participation.

12.2.3.1 Applicability. This Auction Procedure is applicable to MAPP-Region transmission owners and Eligible Transmission Customers, including but not limited to Affected Generators and MAPP-Region Load-Serving Entities ("LSEs"), collectively referred to as "Eligible Participants."

12.2.3.2 First Call Offer of Subscription Rights. The Contractor (*i.e.*, MAPPCOR acting on behalf of the Host TO) shall submit an offer to participate in the Economic Network Upgrade to all Eligible Participants and to any Affected System Operators participating on a reciprocal basis in accordance with the benefit allocation defined on a cost causation basis in the economic planning studies performed in compliance with Section 11 of this Attachment P, in exchange for Subscription Rights to the new transmission capacity.

The Contractor shall offer, on OASIS on a non-discriminatory, basis to all Eligible Participants the opportunity to participate in the Economic Network Upgrade by purchasing a portion of the Subscription Rights made available by such Auction Procedure. If an Eligible Participant accepts the subscription offer for participation in the Economic Network Upgrade, the subscription shall be granted to such Eligible Participant as a Subscription Rights buyer. If demand for the Subscription Rights offered exceeds the number of Subscription Rights available, the Contractor shall offer such Subscription Rights to the interested Eligible Participants on a pro rata basis, based on each Eligible Participant's designated level of transmission capacity megawatts requested in its submitted offer to participate to the total transmission capacity megawatts requested. Each participating interested Eligible Participant shall have 60 days to accept such an offer for pro rata Subscription Rights.

12.2.3.3 Second Round Offer of Subscription Rights. Within 30 days following the close of the above first call offer of Subscription

Rights, the Contractor shall release any Subscription Rights that remain unsubscribed to all Eligible Participants. The Contractor shall allow thirty (30) days for recipients of the second round offer to indicate interest in acquiring the residual Subscription Rights. If the Subscription Rights offered are acquired by an Affected System Operator's transmission business unit, the revenue requirements will be rolled into the Affected System Operator's rate structure and the acquired transmission capacity shall be available under the Affected System Operator's open access transmission tariff ("OATT"). The Affected System Operator, including the Host TO, shall adjust the point-to-point and network service charges to reflect the addition of any revenue requirements to the Affected System Operator's OATT embedded cost rates, provided that any such Affected System Operator subject to the jurisdiction of the Commission shall obtain approval of the Commission prior to causing such rate adjustment to be effective. Furthermore, any subscribing Eligible Participant may roll the revenue requirements associated with the acquired Subscription Rights into the Affected System Operator's rate structure, as approved by the Commission, if the subscribing Eligible Participant makes the acquired transmission capacity available under the Affected System Operator's OATT.

12.2.3.4 Resale and Reassignment of Subscription Rights. The MAPP transmission provider shall provide resale and reassignment provisions for Subscription Rights on the same basis as provided in the *pro forma* OATT for firm point-to-point transmission service.

12.2.3.5 Failure to Obtain Subscriptions. If, after the first and second rounds of the Auction Procedure have concluded, Subscription Rights sufficient to cover the total cost of the Economic Network Upgrade project have not been successfully subscribed, the Contractor shall notify subscribing Eligible Participants of the Subscription Rights shortfall. Such notice shall be in writing, include the amount of available Subscription Rights and provide thirty (30) days for such subscribing Eligible Participant to increase its Subscription Rights election. At the end of the expiration of the thirty (30) day notice period, the proposed project may be cancelled if it is still not fully subscribed. The Host TO or another Affected System Operator may choose to fund the remaining portion of the necessary subscription rights and roll those costs into their transmission revenue requirements. If a project is cancelled

under such circumstances, the Contractor shall notify all of the subscribers in writing within thirty (30) days of its decision to terminate. If an Economic Network Upgrade is terminated for lack of subscriptions or for defaults on subscriptions, the project shall be deemed to have insufficient economic benefit to market participants, and the project shall not qualify for reconsideration as an Economic Network Upgrade until the latter of a) the next biennial MAPP Regional Plan planning cycle, or b) two years from the date of notice of cancellation.

12.2.3.6 Facilities Agreement. If the Economic Network Upgrade is fully subscribed, the Host TO shall offer the subscribers a Facilities Agreement within sixty (60) days of full subscription.

12.2.3.7 Defaulting Subscribers. If any of the subscribers fail to execute the Facilities Agreement within thirty (30) days of receipt of such agreement, the Contractor shall use its best efforts to award the non-signing subscriber's Subscription Rights to all Eligible Participants. If the Contractor is unable to secure an alternative subscriber, the Host TO shall pursue resolution with the non-signing/defaulting subscriber(s) pursuant to Article 9, Dispute Resolution, of the MAPP Restated Agreement. Any dispute that has not been resolved through the MAPP Article 9 Dispute Resolution process shall be resolved through the appropriate regulatory or jurisdictional dispute resolution proceedings. A party seeking to invoke FERC jurisdiction over a Dispute shall file with the Commission the Facilities Agreement unexecuted by the non-signing/defaulting subscriber. The Commission shall determine the obligations of the non-signing/defaulting subscriber. If, as a result of the dispute resolution process the non-signing/defaulting subscriber is relieved of its obligations, the Host TO may cancel the project with no further obligations to the remaining subscribers, except to notify all of the subscribers in writing within thirty (30) days of its decision to terminate.

12.2.3.8 Post-Auction Host Owner Option. In the event the defined Economic Network Upgrade is not fully subscribed after the Auction Procedure described in Sections 12.2.3.2-12.2.3.7 is exhausted, the Host TO may, of its own accord, elect to perform such Economic Network Upgrade, and roll the upgrade costs into the next update of its transmission revenue requirements.

12.2.3.9 Conversion of Subscription Rights to Physical Transmission Rights. The Facilities Agreement associated with an Economic Network Upgrade shall convert the Subscription Rights allocated pursuant to Sections 12.2.3.2, 12.2.3.3, 12.2.3.5 and 12.2.3.7 above, to Physical Transmission Rights. Subscription Rights and Physical Rights shall be the same transmission capability rights with the principal distinction merely being the stage of project commitment. Subscription Rights shall be associated with a good faith expression of intent, albeit still based on non-binding estimated planning costs, to invest in the Economic Network Upgrade. Upon signing a Facilities Agreement, the Eligible Participant's expression of intent to invest as a holder of Subscription Rights becomes a binding contractual commitment with the prescribed Physical Rights to the discrete transmission capability defined in the Facilities Agreement. The additional transmission capability achieved by the project shall be allocated to the Subscription Rights holders as Physical Transmission Rights in proportion to their respective payment for the network upgrade. The Physical Transmission Rights do not in themselves convey a form of transmission service under Part II or Part III of the Tariff. The holder of the Physical Transmission Rights may use those rights in conjunction with a specific application of transmission service under Part II or Part III of the Tariff of the Host TO, or the holder may sell or assign the Physical Transmission Rights to another party. Physical Transmission Rights may be used by a generator owner to secure firm transmission service and/or provide a hedge against potential congestion charges.

12.2.3.10 Completion of Economic Network Upgrades. Once an Economic Network Upgrade is fully subscribed and Facilities Agreements are in place for all subscribers, the Host TO shall apply good faith efforts to obtain approvals for, design, construct, own, operate and maintain the proposed Economic Network Upgrade facilities under the terms and conditions set forth in the Facilities Agreement(s).

12.2.3.11 Inter-Regional Coordination. This Procedure may be applied for inter-regional Economic Network Upgrades demonstrating inter-regional economic benefits. MAPP Transmission Owners may use this Procedure to fulfill any requirements of reciprocal obligations for inter-regional transmission upgrades identified by the planning processes of adjacent regional entities, including but not limited to the Midwest ISO Transmission Expansion Plan. This Procedure shall also be available to

transmission owners in adjacent regions that may be invited to participate in a subscription rights offering from a MAPP Transmission Owner, based on demonstrations of benefits under Section 11 of this Attachment P.

12.2.3.12 Transmission Projects for Renewable Energy Zones. The Subscription Rights procedures of Sections 12.2.3.3 through 12.2.3.7 above may also be applied to a regional transmission project that is designed to develop deliverability from Renewable Energy Zones to a market in the same manner that the Subscription Rights procedures are applied for Economic Network Upgrades. However, this procedure shall not be an alternative for requirements of Transmission Access Projects under Parts II and III of the Tariff, or for the obligations of Attachment I, "Standard Large Generator Interconnection Procedures (LGIP)". The Renewable Energy Zone transmission project must be included in the MAPP Regional Plan or in the transmission plan of an adjacent region that has been coordinated with the MAPP Regional Plan.

12.3 Existing Cost Allocation Methodologies. The cost allocation methodology set forth in this Section 12.0 shall not modify or be inconsistent with (a) existing mechanisms to allocate costs for projects that are constructed by a single transmission owner and billed under existing rate structure, or (b) existing cost allocation methods applicable to specific requests for interconnection or transmission service under the pro forma OATT. Further, the cost allocation methodology set forth in this Section 12.0 shall not supersede cost-allocation, cost-sharing or joint-investment obligations to which an individual Host TO or Affected System may be subject.

13.0 Western's Upper Great Plains Region Local Planning Process

Western's UGPR Local Transmission Planning Process covers transmission facilities under Western's Tariff contained within both the Eastern and Western Interconnection of Western's Upper Great Plains Region. The Local Transmission Plan (LTP) is the transmission plan of the Transmission Provider that identifies the upgrades and other investments to the Western UGPR Transmission System necessary to reliably satisfy, over the planning horizon, Network Customers' resource and load growth expectations for Native Load Customers; Transmission Provider's obligations pursuant to grandfathered, non-OATT agreements; and Transmission Provider's Point-to-Point Transmission Service customers' projected service needs including obligations for rollover rights. In addition to this local process, Western UGPR participates in the regional planning efforts as described in Part I of this Attachment P and utilizes these forums also to coordinate new projects with Transmission Customers, Affected Generators, or other relevant stakeholders.

13.1 Scope. The purpose of Western's UGPR Local Transmission Planning Process is to conduct local long-term planning for transmission facilities typically on a two year planning cycle with annual assessments to serve Western's network load and firm transmission commitments. The preparation of the LTP shall be done in accordance with the general policies, procedures, and principles set forth in this Attachment P.

13.1.1 Service Requests. Point-to-Point transmission service request must be made as a separate and distinct submission by an Eligible Customer in accordance with the procedures set forth in Transmission Provider's Tariff. Similarly, Network Customers must submit Network Resource and load additions/removals pursuant to the process set forth in Transmission Provider's Tariff.

13.1.2 Comparability between Customers. The process provides comparable long-term transmission system planning for similarly-situated wholesale customers. The process provides long-term reliability and economic planning of transmission facilities for Western's UGPR firm commitments (e.g., point-to-point service with rollover rights) and Network Customers served from the UGPR Transmission System that is comparable to the long-term planning of its own Native Load Customers from the UGPR System. In developing the LTP, Transmission Provider shall apply applicable reliability criteria, including criteria established by the Transmission Provider, the Midwest Reliability Organization, the WECC, the North American Electric Reliability Corporation, and the Federal Energy Regulatory Commission.

13.1.3 Comparability between Resources. Comparability between resources, including similarly situated customer-identified projects, will be accomplished by modeling from the generation to the Network Load on the UGPR Transmission System. Comparability between resources will be achieved in Western UGPR's LTP by including all valid data received from customers (including load forecast data, generation data and Demand Resource data) in the LTP development. Comparability will be achieved by allowing customer-defined projects sponsor participation throughout the transmission planning process and by considering customer-defined projects (transmission solutions and solutions utilizing Demand Resources load modeled as a load adjustment) in the LTP development. The Transmission Provider retains discretion as to which solutions to pursue and is not required to include all customer-identified projects in its plan.

13.2 Responsibilities. Western will be responsible for the development of the transmission plans that result from Western's UGPR Local Transmission Planning Process. Western's UGPR Local Planning Process will allow timely and meaningful stakeholder input and participation in the development of the LTP. Western's UGPR Local Planning Process will follow regional planning procedures provided in Sections 1 through 12 and Sections 14 of this Attachment P. The transmission plans and studies on the eastern interconnect resulting from Western's UGPR Local Planning Process that are to be included in MAPP Regional Plans will be submitted to the applicable MAPP Committees and on the Western Interconnection resulting from Western's UGPR Local Planning Process that are to be included in WECC Regional Plans will be submitted to the applicable WECC Committees, to their successor regional or sub-regional committees, and/or to the successor regional transmission organization, independent transmission coordinator, or independent system operator, as appropriate.

In addition to developing transmission plans to be provided for regional coordinated planning, Western's UGPR Local Planning Process will develop plans to address local UGPR transmission issues, such as transmission facility uprates that do not significantly change network system flows. The plans will be provided in reports with executive summaries that are brief and designed to be understandable to stakeholders.

13.3 Open Planning Process.

13.3.1 Openness: Western's UGPR Local Planning Process will be open to all stakeholders during the development of the LTP. All meetings related to the LTP process shall be: (1) noticed by the Transmission Provider via the OASIS; and (2) provide for alternate means of participation, to the extent practical and economical, such as teleconference, videoconference or other similar means. The mode, method, schedule, process, and instructions for participation in Western's UGPR Local Planning Process shall be posted and maintained on the OASIS.

13.3.2 Limitations on Disclosure: While Western's UGPR Local Planning Process will be conducted in the most open manner possible, Transmission Provider has an obligation to protect sensitive information such as, but not limited to, Critical Energy Information and the proprietary materials of third parties. Nothing in this Attachment P shall be construed as compelling the Transmission Provider to disclose materials in contravention of any applicable regulation, contractual arrangement, or lawful order unless otherwise ordered by a governmental agency of competent jurisdiction. Transmission Provider may employ mechanisms such as confidentiality agreements, protective orders, or waivers to

facilitate the exchange of sensitive information where appropriate and available.

13.3.3 Compliance: Transmission Provider will adhere to all applicable regulations in preparing the LTP, including but not limited to the Standards of Conduct for Transmission Providers and Critical Information Energy Information.

13.4 Study Process. A local study group process will be instituted in addition to the open planning process described in Section 13.3. The purpose of the local study group process is to expand stakeholder participation in Western's UGPR Local Planning Process as provided in the following:

(a) A working group will be formed at the first semi-annual stakeholder meeting to receive information and provide comment on planning issues that are the subject of Western's UGPR Local Planning Process that arise between stakeholder meetings. Western UGPR will provide (subject to confidentiality, CEII, cyber security and Standards of Conduct requirements):

1. The initial assumptions used in developing the annual local process transmission assessment and will provide an opportunity for feedback.

2. The models used for local process transmission planning.

3. Information regarding the status of local process transmission upgrades and how such upgrades are reflected in future local process transmission plan development.

4. The draft study scope for those studies conducted by the working group as part of the local process, which will include or provide references to the basic assumptions for the study, the model or models used in the working group study including information regarding significant changes in the model.

5. The draft transmission report for those studies conducted by the working group as part of the local process, as prepared by Western UGPR or Western UGPR's designate. Stakeholders who do not participate on the working group will be given the opportunity to comment on the draft report after Western UGPR has considered the comments of the working group. The report will include an executive summary that is brief and is designed to be understandable to stakeholders.

6. Draft transmission plans that result from Western's UGPR Local Planning Process before they are distributed to stakeholders pursuant to the open planning process described in Section 13.3 above.

(b) The working group meetings will be established by Western UGPR on an as needed basis. Working group meetings will also be established if need is expressed by 10 members of the respective working group; however, Western UGPR will not be required to hold meetings of the working group more than on a semi-annual basis. Meetings will typically be conference calls and/or web casts, but face-to-face meetings may be called if necessary. Meeting notices will be distributed via email to the respective study group mailing list. Meeting materials may be distributed via email respecting email size limitations and CEII, cyber security, and Standards of Conduct requirements. A password protected FTP site or internet may be used to transmit study models or large amounts of data.

(c) Western UGPR will chair and provide leadership to the working group, including facilitating the group meetings.

(d) Input from the working group members will be considered in the local planning process. Comments will generally be expected via email or during working group meetings. Comments will be solicited within the defined comment periods of the study group process.

13.5 Transparency. In addition, Western's UGPR Local Planning Process will be open and transparent to facilitate comment and exchange of information, as described below:

(a) Western UGPR will make available the basic criteria that underlie its transmission system plans by posting Western UGPR's Transmission Planning Criteria for facilities covered by this Attachment P on the Western UGPR OASIS page.

(b) Western UGPR will make available to registered stakeholders (subject to CEII, cyber security, and Standards of Conduct requirements) the basic criteria, assumptions, and data that underlie its transmission system plans. For this purpose, Western UGPR will make the following documents available in a way that maintains confidentiality and complies with CEII and cyber security requirements: i. Western's FERC Form 714, ii. Western's FERC Form 715.

(c) Western UGPR will provide information on the location of applicable NERC/MAPP/Midwest Reliability Organization ("MRO")/WECC planning criteria, reliability standards, regional power flow models, or other pertinent information, as available.

(d) Western UGPR will provide its regional planning model submittal in accordance with Section 13.6 of this Attachment P.

(e) Western UGPR will set the planning study horizons and study frequencies considering NERC and or regional entity standards and the MAPP SPG planning cycle and the WECC Regional Planning Process.

(f) Western UGPR will simultaneously disclose transmission planning information where appropriate in order to alleviate concerns regarding the disclosure of information with respect to the FERC Standards of Conduct.

(g) Western UGPR will consider customer demand response resources in Western's UGPR Local Planning Process on a comparable basis with generation resources in developing transmission plans provided that

1. such resources are capable of providing measurable transmission system support needed to correct transmission system problems assessed in the Western's UGPR Local Planning Process,

2. such resources can be relied upon on a long-term basis,

3. such resources meet NERC Reliability Standards and applicable laws, rules, and regulations, and

4. the inclusion of such resources in corrective action plans are permitted by the NERC Reliability Standards.

13.6 Information Exchange. Certain information exchanges associated with the open planning process and the local study group process are described in Sections 13.3 and 13.4 in this Attachment P. In addition, information exchange for base regional model development will take place as follows:

(a) Western participates in the annual development of the regional base case power flow and stability models currently for the PSSE computer application. These regional models provide the basis for studies of transmission service requests, generator interconnection requests, local planning studies and regional planning studies. To assist in the development of accurate base case regional models and thereby develop appropriate local transmission plans for the Western UGPR system, Western will request at a minimum the following data of its Transmission Customers:

1. Network Customers and other Load Serving Entities (LSE) within the Western UGPR Control Area will be requested annually to submit

existing loads and future loads for the horizon of the regional base case models (typically 10 years) for each of its load points. Information for firm loads will be separated from information for interruptible loads.

2. Network Customers and other LSEs within the Western UGPR Control Area will be requested annually to provide a list of all existing and proposed new demand response resources including behind the meter generation or load curtailment; the MW impact on peak load; the historical and expected future operating practice of the demand response resources such as the conditions under which the customer intends to initiate each resource, and whether each resource is available for use in providing measurable transmission system support to correct problems assessed in Western's UGPR Local Planning Process, as well as, other information required to consider such resources as provided in Section 13.5 (g). Network Customers and other LSEs will be requested to provide updates of this information when substantive changes occur.

3. Network Customers and other LSEs within the Western UGPR Control Area will be requested annually to provide a list of existing and proposed new generation resources and historical and expected future dispatch practices such as the load level at which the customer plans to start each generating unit and plant, and whether each generation resource is available for use in providing measurable transmission system support to correct problems assessed in Western's UGPR Local Planning Process, as well as, other information required to consider such resources as provided in Section 13.5 (g). Network Customers and other LSEs will be requested to provide updates of this information when substantive changes occur.

4. Registered point-to-point customers including Western UGPR's marketing and energy affiliates, as appropriate, will be requested annually to submit projections of their quantifiable transmission service needs over the planning horizon, including applicable receipt and delivery points and the transmission service reservations anticipated to be scheduled.

5. Network Customers and other LSEs within the Western UGPR Control Area will be requested annually to submit existing and expected future generation for the horizon of the regional base case models (typically 10 years).

6. Additional modeling data will be requested as necessary to conform to the requirements of the NERC MOD standards.

(b) The data submitted by Transmission Customers will be included to the extent appropriate in the base case model.

(c) The Western UGPR data request will be sent annually in coordination with the regional data request. Western UGRP will send a data request to its Transmission Customers typically prior to expected transmittal of the regional data request. Transmission Customers will be expected to respond to the Western UGPR data request in a timely fashion.

(d) Responses to the data request will be accepted in forms such as PSS™E raw data format or in spreadsheet format with appropriately labeled headings.

(e) Each Transmission Customer and LSE within the Western UGPR control area will be responsible for providing Western with an email address of its data modeling contact. Western will send the annual data request to these contacts via email.

(f) The Western data response will be made available subject to CEII, cyber security and Standards of Conduct restrictions upon request to registered stakeholders.

13.7 Western's UGPR Local Economic Planning Studies. Local economic planning studies are performed to identify significant and recurring congestion on the transmission system and/or address the integration of new resources and loads. Such studies may analyze any, or all, of the following: (i) the location and magnitude of the congestion, (ii) possible remedies for the elimination of the congestion, in whole or in part, including transmission solutions, generation solutions and solutions utilizing demand response resources, (iii) the associated costs of congestion (iv) the costs associated with relieving congestion through system enhancements (or other means), and, as appropriate, (v) the economic impacts of integrating new resources and loads. All local economic planning studies will be performed through Western UGPR's participation in the regional economic planning studies as described in this Attachment P.

(a) Any Transmission Customers, Affected Generators, or other relevant stakeholders ("Requester") may submit a study request for an economic planning study directly to Western, the MAPP TPSC, or the WECC TEPPC. All requests must be electronically submitted to Western's Regional Office Contact e-mail Address as posted on the Transmission Providers OASIS. Western will not perform local economic planning studies but will coordinate the performance of such studies with the MAPP

TPSC or the WECC TEPPC. The economic planning study cycle will be that of the MAPP TPSC or WECC TEPPC process as outlined in this Attachment P.

(b) Western shall ensure that any economic planning study requests submitted to Western are properly handled by forwarding the Requestor to MAPP TPSC or WECC TEPPC for inclusion in the regional economic planning studies as outlined in this Attachment P.

(c) If the MAPP TPSC or WECC TEPPC determines, after reviewing through an open stakeholder process, that the requested economic planning study as forwarded by Western is not a high priority study, the Requester may perform the economic planning analysis at the Requester's expense. Western will support the Requester in ensuring that the study is coordinated as necessary through local, subregional or regional planning groups.

(d) Western cannot fund any high priority and other local economic planning studies due to its spending authorization being contingent upon Congressional Appropriations. In the event that Western is requested to perform a local economic planning study, Western will, at the Requester's expense, provide its assistance in having a third party perform the local economic planning study. Western will support the Requester in ensuring that the study is coordinated as necessary through local, subregional or regional planning groups.

14.0 Introduction to the WECC Regional Planning Process for Western's UGPR

Western UGPR will coordinate its Western Interconnection LTP through the WECC SPGs. The WECC SPGs will coordinate their subregional plans with the other subregional plans in the Western Interconnection and at the TEPPC level.

14.1 WECC Procedures for Regional Planning Project Review.

(a) WECC develops the Western Interconnection-wide coordinated base cases for transmission planning analysis such as power flow, stability and dynamic voltage stability studies. The WECC approved base cases are used for study purposes by transmission planners, subregional planning groups, and other entities that have signed confidentiality agreements with WECC.

(b) WECC also maintains a data base for reporting the status of all planned projects throughout the Western Interconnection.

(c) WECC provides for coordination of planned projects through its Procedures for Regional Planning Project Review.

(d) WECC's Path Rating Process ensures that a new project will have no adverse effect on existing projects or facilities.

14.2 WECC Open Stakeholder Meetings. Western Interconnection-wide economic planning studies are conducted by the WECC TEPPC in an open stakeholder process that holds region-wide stakeholder meetings on a regular basis. The WECC-TEPPC Transmission Planning Protocol, including the TEPPC procedures for prioritizing and completing regional economic studies, is posted on the WECC website. Western participates in the region-wide planning processes, as appropriate, to ensure that data and assumptions are coordinated.

14.3 Role of WECC TEPPC. WECC TEPPC provides two main functions in relation to Western's planning process:

(a) Development and maintenance of the west-wide economic planning study database. TEPPC uses publicly available data to compile a database that can be used by a number of economic congestion study tools. Also, TEPPC's database is publicly available for use in running economic congestion studies. For an interested transmission customer or stakeholder to utilize WECC's Pro-Mod planning model, it must comply with WECC confidentiality requirements.

(b) TEPPC has an annual study cycle described in the WECC-TEPPC Transmission Planning Protocol, during which it will update databases, develop and approve a study plan that includes studying transmission customer high priority economic study requests as determined by the open TEPPC stakeholder process, perform the approved studies and document the results in a report.

PART II – Western Interconnection of Western's Rocky Mountain, Desert Southwest and Sierra Nevada Regional Offices

Western coordinates its transmission planning with other transmission providers and stakeholders in the Rocky Mountain – located in Loveland, CO, Desert Southwest – located in Phoenix, AZ, and Sierra Nevada - located in Folsom, CA, Regional Offices, and the Western Interconnection as a whole, through its active participation in the Southwest Area Transmission Planning (SWAT) group, the Colorado Coordinated Planning Group (CCPG), the Sierra Subregional Planning Group (SSPG), membership in WestConnect[1], membership in the Western

[1] WestConnect was formed under a memorandum of understanding (MOU) that has been entered into by 13 transmission providing electric utilities in the Western Interconnection. The purposes of WestConnect are to investigate the feasibility of wholesale market enhancements, work cooperatively with other Western Interconnection organizations and market

Electricity Coordinating Council (WECC), and participation in the WECC Transmission Expansion Planning Policy Committee (TEPPC) and its Technical Advisory Subcommittee (TAS).

Three subregional planning groups (SPG) operate within the WestConnect footprint: SWAT, CCPG and SSPG. WestConnect's planning effort, which includes funding and provision of planning management, analysis, report writing and communication services, supports and manages the coordination of the subregional planning groups and their respective studies. Such responsibilities are detailed in the WestConnect Project Agreement for Subregional Transmission Planning (WestConnect STP Project Agreement), dated May 23, 2007 (see Western Attachment P Hyperlinks List at www.oatioasis.com/WAPA/WAPAdocs/Planning-Process.htm). Western is a signatory to this Agreement.

The subregional planning groups within the WestConnect footprint, assisted by the WestConnect planning manager, coordinate with other Western Interconnection transmission providers and their subregional planning groups through TEPPC. TEPPC provides for the development and maintenance of an economic transmission study database for the entire Western Interconnection and performs annual congestion studies at the Western Interconnection region level.

1.0 Western Transmission Planning

1.1 Western Planning Process.

Participation in Western's planning process is open to all affected parties, including but not limited to all transmission and interconnection customers, state authorities, sponsors of transmission solutions, generation solutions and solutions utilizing demand resources, and other stakeholders.

1.1.1 Confidential or Proprietary Information

Western's transmission planning studies may include base case data that are WECC proprietary data or classified as Critical Energy Infrastructure Information (CEII) by the Federal Energy Regulatory Commission (FERC). A stakeholder must hold membership in or execute a confidentiality agreement with WECC (see Western Attachment P Hyperlinks List at www.oatioasis.com/WAPA/WAPAdocs/Planning-Process.htm) in order to obtain requested base case data from Western. A stakeholder may obtain transmission planning information classified as

---

stakeholders, and address seams issues in the appropriate forums. WestConnect has initiated an effort to facilitate and coordinate regional transmission planning across the WestConnect footprint. Current parties to the WestConnect MOU are: Arizona Public Service Company, El Paso Electric Company, Imperial Irrigation District, Nevada Power Company/Sierra Pacific Power Company, Public Service Company of Colorado, Public Service Company of New Mexico, Sacramento Municipal Utility District, Salt River Project, Southwest Transmission Cooperative, Transmission Agency of Northern California, Tri-State Generation and Transmission Association, Tucson Electric Power Company, and Western Area Power Administration.

CEII from Western upon execution of a confidentiality agreement with Western.

1.1.2 Overview

Western's transmission planning process consists of an assessment of the following needs:

(a) Provide adequate transmission to serve Firm Electric Service (FES) customers.

(b) Where feasible, identify alternatives such as demand response resources that could meet or mitigate the need for transmission additions or upgrades.

(c) Access adequate resources in order to reliably and economically serve FES and network loads.

(d) Provide for interconnection for new generation resources.

(e) Coordinate new interconnections with other transmission systems.

(f) Accommodate requests for long-term transmission access.

1.1.3 Western's Transmission Planning Cycle

(a) Calendar Year Planning Cycle. Western conducts its transmission planning on a calendar year cycle for a ten year planning horizon.

(b) Annually Updated Ten Year Plan. Western updates its ten year plan annually and publishes an annual Ten Year Transmission Plan document typically in November.

1.1.4 Transmission Customer's Responsibility for Providing Data

(a) Use of Customer Data. Western uses information provided by its transmission customers to, among other things; assess network load and resource projections (including demand response resources), transmission needs, in-service dates to update regional models used to conduct planning studies.

(b) Submission of Data by Network Transmission Customers. Network transmission customers shall supply information on their ten year projected network load and network resources (including demand response resources) to Western on an annual basis.

Western requires that this information be submitted electronically to Western Regional Office Contact e-mail address (www.oatioasis.com/WAPA/WAPAdocs/Planning-Process.htm) by March 15 each year.

(c) Submission of Data by Other Transmission Customers. To maximize the effectiveness of the Western planning process, it is essential that all other transmission customers provide their ten year needs in the form of relevant data for inclusion in the Western transmission planning process. Western requires that this information be submitted electronically to Western Regional Office Contact e-mail address (www.oatioasis.com/WAPA/WAPAdocs/Planning-Process.htm) by March 15 each year. This will facilitate inclusion of transmission customer data in the planning process for the annual transmission plan.

(d) Transmission Customer Data to be Submitted. To the maximum extent practical and consistent with protection of proprietary information, data submitted by network transmission customers and other transmission customers should include for the ten year planning horizon:

i. Generators – planned additions or upgrades (including status and expected in-service dates) and planned retirements.

ii. Demand response resources – existing and planned demand resources and their impacts on peak demand.

iii. Network customers – forecast information for load and resource requirements over the planning horizon and identification of demand response reductions.

iv. Point-to-point transmission customers – projections of need for service over the planning horizon, including transmission capacity, duration, and receipt and delivery points.

(e) Notification of Material Changes to Transmission Customer Data. Each transmission customer is responsible for timely submittal of written notice to Western of material changes in any of the information previously provided related to the transmission customer's load, resources (including demand response resources), or other aspects of its facilities or operations which may, directly or indirectly, affect Western's ability to provide service.

1.1.5 Types of Planning Studies

(a) Economic Planning Studies. Economic planning studies are performed to identify significant and recurring congestion on the transmission system and/or address the integration of new resources and loads. Such studies may analyze any, or all, of the following: (i) the location and magnitude of the congestion, (ii) possible remedies for the elimination of the congestion, in whole or in part, including transmission solutions, generation solutions and solutions utilizing demand response resources, (iii) the associated costs of congestion (iv) the costs associated with relieving congestion through system enhancements (or other means), and, as appropriate, (v) the economic impacts of integrating new resources and loads. All economic planning studies will be performed either by a sub-regional planning group or TEPPC, and will utilize the TEPPC public data base.

(b) Reliability Studies. Western will conduct reliability planning studies to ensure that all transmission customers' requirements for planned loads and resources are met for each year of the ten year planning horizon, and that all NERC, WECC, and local reliability standards are met. These reliability planning studies will be coordinated with the other regional transmission planning organizations through the SWAT, CCPG, and SSPG studies.

1.1.6 Economic Planning Study Requests (*See* Flow Chart Attached as Exhibit 1)

Requesting Economic Planning Studies. Any Western transmission customer or other stakeholder, including transmission solutions, generation solutions and solutions utilizing demand response resources ("Requester") may submit a study request for an economic planning study directly to Western or TEPPC. All requests must be electronically submitted to Western at Western Regional Office Contact e-mail address (www.oatioasis.com/WAPA/WAPAdocs/Planning-Process.htm). Western will not perform economic planning studies but will coordinate the performance of such studies with TEPPC. The economic planning study cycle will be that of the TEPPC process

(a) Process for Handling Economic Transmission Planning Study Requests by Western. Western shall ensure that any economic planning study requests are properly handled under this Attachment P by:

i. TEPPC Master List. Forwarding the Requestor to TEPPC for inclusion in the TEPPC Master List of economic planning studies for the Western Interconnection and for consideration by TEPPC as a priority request. (see Western Attachment P Hyperlinks List (www.oatioasis.com/WAPA/WAPAdocs/Planning-Process.htm)).

(b) Process for Handling Economic Study Requests Received by TEPPC. TEPPC will review economic planning study requests received from Requesters directly or from Western. TEPPC shall review such study requests during its open stakeholder meeting and, together with its stakeholders, prioritize requests for economic planning studies. Western will participate in the TEPPC prioritization process and provide input as to whether a study request should be included in the TEPPC study plan. The Requester is also encouraged to participate and provide input in the TEPPC prioritization process. For more detail regarding the TEPPC economic planning study process, see the executive summary overview of the TEPPC Transmission Planning Protocol. (see Western Attachment P Hyperlinks List (www.oatioasis.com/WAPA/WAPAdocs/Planning-Process.htm)).

(c) Low Priority Economic Study Requests. If TEPPC determines, after reviewing through an open stakeholder process, that the requested economic planning study is not a priority study, the Requester may have a third party perform the economic planning analysis at the Requester's expense. The Requester will have use of the TEPPC economic study data base and Western will support the Requester in ensuring that the study is coordinated as necessary through local, subregional or regional planning groups.

(d) Clustering Local Priority Economic Planning Studies. TEPPC may determine that any number of Requesters' economic planning study requests should be studied together with other requests.

(e) Cost Responsibility for Economic Planning Studies

i. Priority and Non-Priority Local Economic Planning Studies. Western cannot fund any Priority and Non-Priority local economic planning studies due to its spending authorization being contingent upon Congressional Appropriations. In the event that Western is requested to perform an economic planning study, Western will, at the Requesters expense,

provide its assistance in having a third party perform the economic planning study. The Requester will have use of the TEPPC economic study data base and Western will support the Requester in ensuring that the study is coordinated as necessary through local, subregional or regional planning groups.

ii. Priority Regional Economic Planning Studies. Regional economic studies are performed by TEPPC and funded by WECC.

(f) Exchange of Data Unique to Economic Planning Studies

i. All data used for its economic planning studies from the TEPPC data base.

ii. Requester's request for detailed base case data must be submitted to WECC in accordance with the WECC procedures.

iii. All requests made to Western for economic planning studies and responses to such requests shall be posted on the Western OASIS and the WestConnect website (see Western Attachment P Hyperlinks List (www.oatioasis.com/WAPA/WAPAdocs/Planning-Process.htm)), subject to confidentiality requirements.

(g) Western Point of Contact for Study Requests. Western will identify a Point of Contact on its OASIS to respond to customer/stakeholder questions regarding modeling, criteria, assumptions, and data underlying economic planning studies. (see Western Attachment P Hyperlinks List (www.oatioasis.com/WAPA/WAPAdocs/Planning-Process.htm)).

1.1.7 Stakeholder Participation in Western Study Plans and Planning Results. Western will hold a public planning meeting to review and discuss its transmission study plans and planning results (see Part II Section 1.2.2 below).

1.1.8 Western Study Criteria and Guidelines. Requesters should refer to the Western Planning Criteria document for Western planning criteria, guidelines, assumptions and data. The Western Planning Criteria are posted on the OASIS. (see Western Attachment P Hyperlinks List (www.oatioasis.com/WAPA/WAPAdocs/Planning-Process.htm)).

1.1.9 Western and Stakeholder Alternative Solutions Evaluation Basis. Western's planning process is an objective process that evaluates use of the transmission system on a comparable basis for all customers. All solution alternatives that have been presented on a timely basis (per Part II Section 1.1.4 of this Attachment P), including transmission solutions, generation solutions and solutions utilizing demand response resources, whether presented by Western or another Stakeholder, will be evaluated on a comparable basis. The same criteria and evaluation process will be applied to competing solutions and/or projects, regardless of type or class of Stakeholder. Solution alternatives will be evaluated against one another on the basis of the following criteria to select the preferred solution or combination of solutions: (1) ability to practically fulfill the identified need; (2) ability to meet applicable reliability criteria or NERC Planning Standards issues; (3) technical, operational and financial feasibility; (4) operational benefits/constraints or issues; (5) cost-effectiveness over the time frame of the study or the life of the facilities, as appropriate (including adjustments, as necessary, for operational benefits/constraints or issues, including dependability); and (6) where applicable, consistency with State or local integrated resource planning requirements, or regulatory requirements, including cost recovery through regulated rates.

1.2 Open Public Planning Meetings. Western will conduct at least two open public planning meetings each year, in coordination with four SWAT open public transmission planning meetings, including one joint meeting with CCPG and SSPG that will allow and encourage customers, interconnected neighbors, sponsors of transmission solutions, generation solutions and solutions utilizing demand resources, and other stakeholders to participate in a coordinated, nondiscriminatory process for development of Western's transmission plan.

1.2.1 Purpose and Scope. Western's open public transmission planning meetings will provide an open transparent forum whereby electric transmission stakeholders can comment and provide advice to Western during all stages of its transmission planning. These public transmission planning meetings will serve to:

(a) Provide a forum for open and transparent communications among area transmission providers, customers, sponsors of transmission solutions, generation solutions and solutions utilizing demand resources, and other interested stakeholders;

(b) Promote discussion of all aspects of Western's transmission planning activities, including, but not limited to, methodology, study inputs and study results; and

(c) Provide a forum for Western to understand better the specific electric transmission interests of all stakeholders.

1.2.2 Public Planning Meeting Process.

(a) Open Stakeholder Meetings. All public transmission planning meetings will be open to all stakeholders.

(b) Planning Meeting Schedule. Western will establish its public planning meeting schedule as needed, but no less than twice annually.

(c) Meeting Purpose. Meetings will be conducted to (i) allow Western to maximize its understanding of its customers' forecast needs for Western's transmission system; (ii) offer customers, sponsors of transmission solutions, generation solutions and solutions utilizing demand resources, and other stakeholders an opportunity to be informed about, offer input and advice into, Western's transmission system and planning process, as well as to propose alternatives for any upgrades identified by Western; (iii) review study results; and (iv) review transmission plans.

(d) Coordination with SWAT, CCPG and SSPG. Western's local transmission planning process will be coordinated with the SPGs through quarterly planning meetings described in more detail below (see Part II Section 2.2.7).

(e) Posting of Meeting Notices. All meeting notices, including date, time, place and draft meeting agenda, will be posted on Western's OASIS and the WestConnect website (see Western Attachment P Hyperlinks List(www.oatioasis.com/WAPA/WAPAdocs/Planning-Process.htm)), and distributed to Western customer 30 days prior to the public planning meeting.

(f) Posting of Study Plans and Planning Results. Study plans and planning results will be posted on Western's OASIS and the WestConnect website (see Western Attachment P Hyperlinks List (www.oatioasis.com/WAPA/WAPAdocs/Planning-Process.htm)), and distributed to Western's customers two weeks prior to the public planning meeting.

(g) Meeting Process. At the public planning meetings, Western will (i) review its transmission planning process and current study plan with stakeholders; (ii) request stakeholder review of the current study plan; (iii) provide an opportunity for comment on any aspect of its transmission planning process; (iv) invite the submittal of transmission study requests from stakeholders for review and discussion; and (v) provide updates on its planned projects. During the meeting, and for fifteen (15) calendar days following the meeting, all stakeholders and interested parties will be encouraged to provide Western with any comments on the study results presented in the public meeting. The final local study results and study plan will be posted on Western's OASIS and the WestConnect website (see Western Attachment P Hyperlinks List (www.oatioasis.com/WAPA/WAPAdocs/Planning-Process.htm)).

(h) Electronic Input and Comments. Stakeholders and interested parties are also encouraged to provide input, comments, advice and questions on Western's transmission planning process at any time by sending e-mails to Western Regional Office Contact e-mail address (www.oatioasis.com/WAPA/WAPAdocs/Planning-Process.htm).

(i) Public Planning Meeting Agenda.

i. It is anticipated that in the 2nd Quarter meetings, Western will review information on loads, resources (including demand response resources) and other needs received by March15 from its transmission customers pursuant to Part II Sections 1.1.4(b) and (c) for inclusion in a draft study plan.

ii. It is anticipated that in the 4th Quarter meetings, Western will review planning study requests received by each Regional Office pursuant to Part II Section 1.1.6 and present a draft of its ten year plan for stakeholder review and comment.

iii. This schedule may be modified to coordinate with the subregional and regional transmission planning processes, subject to posting on Western's OASIS and the WestConnect website (see Western Attachment P Hyperlinks List (www.oatioasis.com/WAPA/WAPAdocs/Planning-Process.htm)).

(j) Western Customer Distribution List. All existing Western customers, network and point-to-point, will be included on the

distribution list and actively notified via e-mail of all upcoming public planning meetings. Any other stakeholder, including but not limited to, sponsors of transmission solutions, generation solutions and solutions utilizing demand resources, wanting to be included on Western's e-mail distribution list should submit its information to Western's Point of Contact at Western Regional Office Contact e-mail address (www.oatioasis.com/WAPA/WAPAdocs/Planning-Process.htm).

(k) Posting of Meeting Documents. Western will post all meeting-related notes, documents and draft or final reports on its OASIS and the WestConnect website (see Western Attachment P Hyperlinks List (www.oatioasis.com/WAPA/WAPAdocs/Planning-Process.htm)).

(l) Posting of Public Documents. In order to permit all stakeholders access to the information posted on the OASIS and WestConnect websites, only public information will be shared, and public business conducted, in the open public planning meetings.

1.3 Ten Year Transmission System Plan. Each year Western uses the planning process described in Part II Section 1.1 above to update its Ten Year Transmission System Plan. The Ten Year Transmission System Plan identifies all of its new transmission facilities, 115 kV and above, and all facility replacements/upgrades required over the next ten years to reliably and economically serve its loads.

2.0 Subregional and Regional Coordination

Regional Planning and Coordination at the WestConnect-SWAT,-CCPG and-SSPG subregional level.

2.1 Overview. Western is a party to the WestConnect STP Project Agreement ((see Western Attachment P Hyperlinks List) www.wapa.gov/Transmission/Planning.htm)), and is actively engaged in the SWAT, CCPG and SSPG planning groups. The WestConnect footprint, which includes the regions covered by SWAT, CCPG and SSPG, encompasses the states of Arizona, Colorado, New Mexico, Nevada, and parts of California, Texas, and Wyoming. Western submits its transmission plans to its relevant subregional transmission planning group as required for inclusion in and coordination with the SPG's transmission plan. Western actively participates in the SPG transmission planning process to ensure that Western's data and assumptions are coordinated with the subregional plan. The WestConnect planning manager will ensure that the subregional transmission plan is coordinated to produce the WestConnect Transmission Plan.

2.2 The Subregional Transmission Planning Process.

2.2.1 SWAT,-CCPG and SSPG's Role. Each SPG tasked with bringing transmission planning information together and sharing updates on active projects within the various subregions. The SPG's provide an open forum where any stakeholder interested in the planning of the transmission system in each footprint including sponsors of transmission solutions, generation solutions and solutions utilizing demand resources, can participate and obtain information regarding base cases, plans, and projects and to provide input or express its needs as they relate to the transmission system. SWAT, CCPG and SSPG do not conduct economic planning studies.

2.2.2 Membership. The subregional transmission planning groups are comprised of transmission providers, transmission users, transmission operators, state regulatory entities and environmental entities. Membership is voluntary and open to all interested stakeholders including sponsors of transmission solutions, generation solutions and solutions utilizing demand resources. Western will participate in SWAT, CCPG and SSPG and relevant SPG subcommittees and work groups and will submit its Ten Year Transmission Plans to the relevant work groups. Western's Ten Year Transmission Plans will then be incorporated with the SWAT, CCPG and SSPG subregional transmission plans in accordance with the WestConnect STP Project Agreement. (see Western Attachment P Hyperlinks List (www.oatioasis.com/WAPA/WAPAdocs/Planning-Process.htm)). Western will incorporate any applicable information, data or study results from SWAT, CCPG or SSPG into its planning process.

2.2.3 Subregional Coordination. The SPG's role is to promote subregional transmission planning and development and to ensure that all of the individual transmission plans are coordinated in order to maximize use of the existing transmission system and identify the transmission expansion alternatives that most effectively meet future needs.

2.2.4 Open Subcommittee Forum. All SPG subcommittee planning groups provide a forum for entities including sponsors of transmission solutions, generation solutions and solutions utilizing demand resources, within each respective region, and any other interested parties, to determine and study the needs of the region as a whole.

2.2.5 Forum for Project Sponsors. The SPGs also provide a forum for transmission project sponsors to introduce their specific projects to interested stakeholders and potential partners and allows for joint study of these projects, coordination with other projects, and project participation, including ownership from other interested parties.

2.2.6 Subregional Open Planning Meetings. All SPG transmission planning process for the high voltage and extra high voltage system is open to all transmission customers and stakeholders wishing to participate. Western will assist transmission customers and stakeholders interested in becoming involved in the subregional transmission planning process including sponsor of transmission solutions, generation solutions, and solutions utilizing demand resources, by directing them to appropriate contact persons and websites. All transmission customers and stakeholders are encouraged to bring their plans for future generators, demand resources, loads or transmission services to the SPG planning meetings.

2.2.7 Meeting Agendas. The meeting agendas for the SPG's, WestConnect, Western and any other planning meetings scheduled in conjunction with the SPG meetings will be sufficiently detailed, posted on the WestConnect website (see Western Attachment P Hyperlinks List (www.oatioasis.com/WAPA/WAPAdocs/Planning-Process.htm)) and circulated in advance of the meetings in order to allow customers and stakeholders the ability to choose their meeting attendance most efficiently.

2.3 WestConnect's Role in the Subregional Transmission Planning Process.

2.3.1 WestConnect STP Project Agreement. Each WestConnect party is a signatory to the West Connect STP Project Agreement ((see Western Attachment P Hyperlinks List (www.oatioasis.com/WAPA/WAPAdocs/Planning-Process.htm)) which formalizes the parties' relationships and establishes obligations among the signatory transmission providers to coordinate subregional transmission planning among the WestConnect participants and the subregional planning groups (SWAT, CCPG, and SSPG), participate in the SWAT, CCPG and SSPG subregional transmission planning groups, as appropriate, and produce a WestConnect Transmission Plan. The WestConnect STP Project Agreement is also open for participation by other non-WestConnect transmission providers that participate in the transmission planning activities of SWAT, CCPG and SSPG or any other subregional transmission planning group that may form within the WestConnect footprint.

2.3.2. WestConnect Objectives and Procedures for Regional Transmission Planning. Under the WestConnect Objectives and Procedures for Regional Transmission Planning, Western, along with the other WestConnect STP Project Agreement participants, agrees to work through the SWAT, CCPG and SSPG planning processes to integrate its Ten Year Transmission Plans with the other WestConnect participant transmission plans into one ten year regional transmission plan for the WestConnect footprint by:

(a) Actively participating in the subregional transmission planning processes, including submitting its respective expansion plan, associated study work and pertinent financial, technical and engineering data to support the validity of Western's plan;

(b) Coordinating, developing and updating common base cases to be used for all study efforts within the SWAT, CCPG and SSPG planning groups and ensuring that each plan adheres to the common methodology and format developed jointly by WestConnect subregional planning groups for this planning purpose;

(c) Providing funding for the WestConnect STP Project Agreement planning management functions pursuant to the WestConnect STP Project Agreement;

(d) Retaining an independent facilitator to oversee the WestConnect STP Project Agreement process, ensure comparability among the subregional processes and perform the study work required to pull all the plans together;

(e) Maintaining a regional planning section on the WestConnect website where all WestConnect planning information, including meeting notices, meeting minutes, reports, presentations, and other pertinent information is posted; and

(f) Posting detailed notices on all SWAT, CCPG and SSPG meeting agendas on the WestConnect website. (see Western Attachment P Hyperlinks List (www.oatioasis.com/WAPA/WAPAdocs/Planning-Process.htm)).

2.3.3. WestConnect Planning Meetings. WestConnect hosts two open public stakeholder meetings for transmission planning per year, one in the 1st Quarter and one in the 4th Quarter.

2.3.4. WestConnect Role in Economic Planning. WestConnect will provide advice, on an as needed basis, to TEPPC regarding prioritizing regional economic planning study requests and potential clustering of requested regional economic planning studies, if those studies involve facilities in the WestConnect footprint. WestConnect will not conduct economic planning studies.

2.4. Quarterly Schedule of Subregional and Local Transmission Planning Meetings. Western will coordinate with SWAT, CCPG and SSPG in order to assure that quarterly meetings are times in order to allow projects to escalate from local to subregional to regional councils in a timely fashion.

The proposed focus of the SPG meetings, WestConnect transmission planning meetings and Western public planning meetings will be:

2.4.1. 1st Quarter Meetings

SPG Meetings.

- Approve the final SPG reports for the previous year's study work.
- Approve the SPG study plans for the new year.

WestConnect Planning Annual Meeting (see Western Attachment P Hyperlinks List (www.oatioasis.com/WAPA/WAPAdocs/Planning-Process.htm)).

- Present the WestConnect Ten Year Transmission Plan and WestConnect Transmission Planning Study Report to the Planning Management Committee.

- Recommend approval of the WestConnect Ten Year Transmission Plan by the WestConnect Steering Committee.

- Recommend approval of the WestConnect Transmission Planning Study Report by the WestConnect Steering Committee.

- Approve WestConnect study plans for the new year.

- Propose adjustments to the planning process or budget for the current year as necessary or appropriate.

2.4.2. 2nd Quarter Meeting

SPG Meetings.

- Present preliminary SPG study results.
- Determine additional SPG study sensitivities

Western Planning Stakeholder Meetings:

- Western reviews its transmission planning process and current study plan with transmission customers and stakeholders, and requests their review, comment and advice on any aspect of its transmission planning process. Additionally, Western reviews information on loads, resources and other needs received by March 31 from its transmission customers.

2.4.3. 3nd Quarter Meeting

SPG Meetings.

- Annual Joint SWAT-CCPG-SSPG meeting. SWAT, CCPG and SSPG present current study results and approve key results, findings, and conclusions.

- SWAT specifically invites customer and stakeholder review, comment, advice and transmission study requests for the SWAT transmission planning process.

2.4.4. 4th Quarter Meeting

SWAT Meeting:

- Present draft SPG reports for approval with modifications.

- Specifically invite the submittal of transmission study requests from stakeholders for inclusion in their respective study plans.

WestConnect Planning Workshop:

- Present each current year study supported by (i) final report or (ii) status summary report.

- Present each WestConnect transmission provider's draft ten year transmission plan. Present proposed study plans from SWAT, CCPG and SSPG.

- Discuss future study needs with input from

    - Study groups

- TEPPC
- Other subregional planning groups
- Stakeholders at large

- Draft the WestConnect Ten Year Transmission Plan.

- Draft the WestConnect Transmission Planning Study Report.

Western Planning Stakeholder Meeting:

- Western reviews its transmission planning process and current study plan with stakeholders, and requests stakeholder review, comment and advice on any aspect of its transmission planning process. Additionally, Western reviews planning study requests received and presents a draft of its ten year plan for stakeholder review and comment per each Regional Office calendar.

3.0. Coordination at the Western Interconnection Level

Western will coordinate its plan on a west-wide regional basis through the SPGs and WestConnect. WestConnect will coordinate its subregional plan with the other subregional plans in the Western Interconnection and at the TEPPC level.

3.1. Procedures for Regional Planning Project Review.

3.1.1. WECC coordination of reliability planning.

(a) WECC develops the Western Interconnection-wide coordinated base cases for transmission planning analysis such as power flow, stability and dynamic voltage stability studies. The WECC approved base cases are used for study purposes by transmission planners, subregional planning groups, and other entities that have signed confidentiality agreements with WECC.

(b) WECC also maintains a data base for reporting the status of all planned projects throughout the Western Interconnection.

(c) WECC provides for coordination of planned projects through its Procedures for Regional Planning Project Review.

(d) WECC's Path Rating Process ensures that a new project will have no adverse effect on existing projects or facilities.

3.1.2. WECC Open Stakeholder Meetings. Western Interconnection-wide economic planning studies are conducted by the WECC TEPPC in an open stakeholder process that holds region-wide stakeholder meetings on a regular basis. The WECC-TEPPC Transmission Planning Protocol, including the TEPPC procedures for prioritizing and completing regional economic studies, is posted on the WECC website (see Western Attachment P Hyperlinks List (www.oatioasis.com/WAPA/WAPAdocs/Planning-Process.htm)). Western participates in the region-wide planning processes, as appropriate, to ensure that data and assumptions are coordinated.

3.1.3. Role of WECC TEPPC. WECC TEPPC provides two main functions in relation to Western's planning process:

(a) Development and maintenance of the west-wide economic planning study database.

i. TEPPC uses publicly available data to compile a database that can be used by a number of economic congestion study tools.

ii. TEPPC's database is publicly available for use in running economic congestion studies. For an interested transmission customer or stakeholder to utilize WECC's Pro-Mod planning model, it must comply with WECC confidentiality requirements.

(b) Performance of economic planning studies. TEPPC has an annual study cycle described in the WECC-TEPPC Transmission Planning Protocol (see Western Attachment P Hyperlinks List (www.oatioasis.com/WAPA/WAPAdocs/Planning-Process.htm)), during which it will update databases, develop and approve a study plan that includes studying transmission customer high priority economic study requests as determined by the open TEPPC stakeholder process, perform the approved studies and document the results in a report.

4.0. Dispute Resolution

Western Interconnection Western Regional Offices adhere to the WECC Dispute Resolution process.

5.0. Cost Allocation for New Transmission Projects

5.1. Western will utilize a case-by-case approach to allocate costs for new transmission projects. This approach will be based on the following principles:

5.1.1. Open Season Solicitation of Interest. Project sponsor announces project and actively or verbally solicits interest in the project through informational meetings, information posted on the project sponsor's website, and industry press releases. For any transmission project identified in a Western reliability study in which Western is the project sponsor, Western may elect to hold an "open season" solicitation of interest to secure additional project participants. Upon a determination by Western to hold an open season solicitation of interest for a transmission project, Western will:

(a) Announce and solicit interest in the project through informational meetings, its website and/or other means of dissemination as appropriate.

(b) Hold meetings with interested parties and meetings with public utility staffs from potentially affected states.

(c) Post information via WECC's planning project review reports

(d) Develop the initial transmission project specifications, the initial cost estimates and potential transmission line routes; guide negotiations and assist interested parties to determine cost responsibility for initial studies; guide the project through the applicable line siting processes; develop final project specifications and costs; obtain commitments from participants for final project cost shares; and secure execution of construction and operating agreements.

It is possible that the cost allocation principles for economic studies may be different from the cost allocation methods for projects involving multiple owners. Western, together with WestConnect and WECC, will seek input from stakeholders in proposing cost allocation method.

Exhibit 1

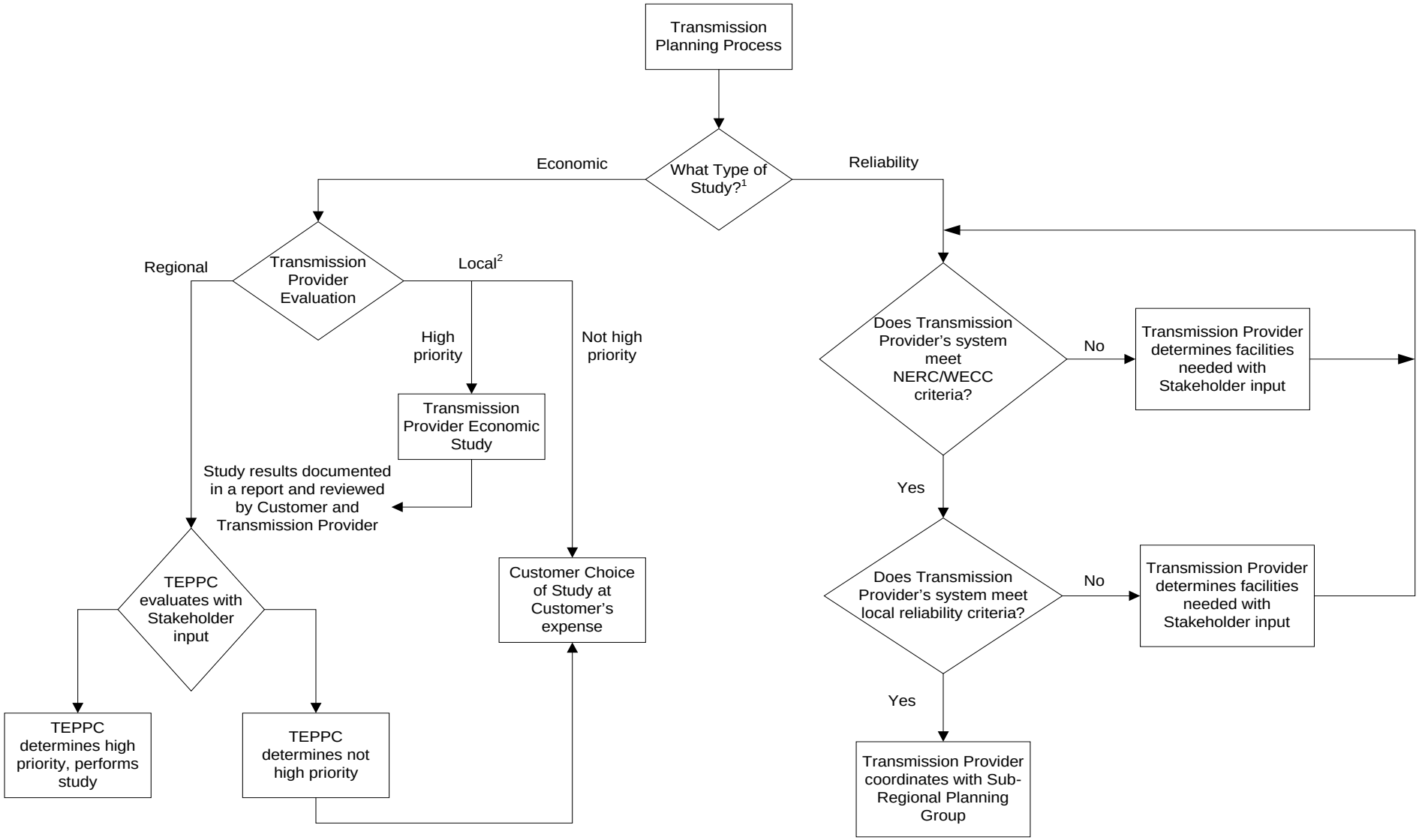

1. Generator Interconnection Request studies are performed pursuant to the Large Generator Interconnection Procedure contained in the Transmission Provider's Open Access Transmission Tariff (OATT). Transmission Service Requests are also performed pursuant to OATT procedures.

2. All requests for economic planning studies received by the Transmission Provider are forwarded to TEPPC for inclusion in the TEPPC Master List. TEPPC will evaluate only those requests that have regional impacts.

ATTACHMENT Q

Creditworthiness Procedures

1.0 OVERVIEW OF CREDITWORTHINESS POLICY

1.1 Introduction.

1.1.1 Application of Policy. For the purpose of determining the ability of the Transmission Customer to meet its obligations, the Transmission Provider will consistently apply credit review procedures to evaluate the Transmission Customer's credit risk in accordance with standard commercial practices. In addition, the Transmission Provider may require the Transmission Customer to provide and maintain in effect during the term of the Service Agreement financial assurance(s) to meet its responsibilities and obligations.

1.1.2 Creditworthiness Process. The creditworthiness procedures consist of data collection (quantitative, qualitative information), credit evaluation, credit score determination, and overall determination of the Transmission Customer's creditworthiness. The Transmission Customer shall provide information to the Transmission Provider as part of its data collection process and as part of the Transmission Customer's Credit Application, or as part of the periodic review to continue receiving services. For credit qualification purposes, prior to the Transmission Customer receiving service, there must be a completed Credit Application and a creditworthiness evaluation.

1.2 Overview of Procedures.

1.2.1 Entity Definition. In order to differentiate Transmission Customers and clarify determination of a Transmission Customer's credit requirements, the Transmission Customer shall be defined as either a new or existing Public Power Entity or Non-Public Power Entity for calculating credit scores. A Public Power Entity shall be defined as a Transmission Customer that is a not-for-profit organization such as but not limited to municipalities, cooperatives, joint action agencies, Native American Tribes, or any other governmental entity. A Non-Public Power Entity shall be defined as any Transmission Customer that is not a Public Power Entity.

1.2.2 Review. The Transmission Provider shall conduct a creditworthiness review, outlined in Section 3.1 below, of the Transmission Customer using information provided by the Transmission Customer from the data

collection process (Section 2.0) and upon its initial request for services and thereafter pursuant to Section 4.1 or at the request of the Transmission Customer. Existing Transmission Customers with a timely payment history at the date of implementation of this policy will be deemed to have satisfied the creditworthiness requirements at that time and be subject to re-evaluation pursuant to Section 4.1. The Transmission Provider can require the Transmission Customer to provide or increase its provided financial assurances before service will be initiated or continued (Section 4.2)

1.2.3 Credit Score. The Transmission Provider shall use the creditworthiness procedures in Section 3.1.1 to establish a credit score for Non-Public Power Transmission Customers. Credit scores will not be calculated for existing Non-Public Power Transmission Customers with a timely payment history at the date of implementation of this policy. Credit scores for such Transmission Customers will be calculated if and when a re-evaluation is required pursuant to Section 4.1. Public Power Transmission Customers will not receive a credit score. Such Transmission Customers will instead be evaluated based on criteria outlined in Section 3.1.2.

2.0 DATA COLLECTION

2.1 Non-Public Power Entity.

A non-public power entity shall provide the following information to the Transmission Provider as part of the Transmission Provider's creditworthiness evaluation:

2.1.1 Agency Ratings. If available to the Transmission Customer, the senior unsecured long-term debt ratings assigned to the Transmission Customer by Standard & Poor's and/or Moody's Investor Service or any other similar bond rating agency, and the long-term issuer rating if the senior unsecured long-term rating is not available.

2.1.2 Financial Statements. The two (2) most recent quarters of financial statements signed by the company controller or other authorized company officer AND the two (2) most recent audited annual financial statements [including, but not limited to the balance sheet, income statement, statement of cash flows, management's discussion and analysis, report of independent auditor (audit opinion), and accompanying notes] of the Transmission Customer's Annual Report, 10K, 10Q, or 8K, as applicable.

2.1.3 Material Issues/Changes. Any pending information not incorporated in the financial reports that could materially impact the viability of the Transmission Customer including, but not limited to litigation, investigations, arbitrations, contingencies, liabilities, and affiliate relationships.

2.1.4 Additional Information. The Transmission Provider may request additional information as it determines is necessary and appropriate for the credit evaluation, and the Transmission Customer shall provide such additional information in a timely manner. At any time, the Transmission Customer may provide the Transmission Provider with additional information that the Transmission Customer considers relevant to the credit evaluation.

2.2 Public Power Entity.

A public power entity will answer questions specific to its financial viability on the Credit Application and be evaluated on the criteria set forth in Section 3.1.2.

2.3 Information Concerning Material Changes/Issues.

2.3.1 The Transmission Customer, public or non-public, must give the Transmission Provider notice of any material change in its financial condition within five (5) business days of the occurrence of the material change. A material change in financial condition includes but is not limited to the following:

(a) For entities that initially met the creditworthiness requirements under the policy and are not required to post financial assurance to the Transmission Provider, a change in financial condition that results in a downgrade of long or short-term debt rating by a major bond rating agency or being placed on a credit watch with negative implications by a major credit rating agency; or

(b) The resignation of key officer(s); or

(c) The issuance of a regulatory order or the filing of a lawsuit that could materially adversely impact current or future results; or

(d) A default in payment obligations; or

(e) Any new investigations, arbitrations, contingencies or changes in affiliate relationships; or

(f) The filing of a voluntary or involuntary petition to institute bankruptcy proceedings under the United States Bankruptcy Code or any successor statute, or the filing to institute any proceedings under state law concerning actual or potential insolvency.

2.4 Format.

All data must be submitted in the English language. Financial data must be denominated in U.S. currency and conform to U.S. Generally Accepted Accounting Principles (GAAP). The Transmission Provider will maintain any non-public data included in such information on a confidential basis.

2.5 Consolidated Entity.

If the Transmission Customer's financial information is consolidated with other entities, the Transmission Customer must extract and submit as separate documents all data and information related solely to the Transmission Customer. This must include all financial information, associated notes, and all other information that would comprise a full financial report conforming to GAAP.

3.0 CREDIT EVALUATION

3.1 Determining Creditworthiness.

3.1.1 Non-Public Power Entities

In order to be found creditworthy, the Transmission Customer must meet the following standards:

(a) The Transmission Customer is not in default of its payment obligations under the Tariff and has not been in persistent default under the provisions of the Tariff; and

(b) The Transmission Customer is not on Western's subscribed rating service watch list; and

(c) The Transmission Customer is not in default of any payment obligation to the Transmission Provider; and

(d) The Transmission Customer is not in bankruptcy proceedings; and

(e) The Transmission Customer meets credit score requirements consisting of the following quantitative and qualitative factors. The Transmission Customer shall receive a score for meeting or exceeding each qualitative or quantitative factor. A Non-Public

Power Entity may receive a minimum score of zero (0) and a maximum score of six (6), six being best. One point will be awarded for each of the following items.

i. Total Debt/Total Capital less than 70%.

ii. EBIT coverage (Earnings Before Interest and Income Taxes/Interest Expense) greater than 1.5 times.

iii. Current Ratio greater than 1.0.

iv. Have Cash Flow from Operations to Total Debt (includes short-term debt, long-term debt, current portion of long-term debt, and off-balance sheet operating lease obligations) greater than 10%.

v. Agency Ratings of investor grade or higher (e.g., S&P of BBB- and/or Moody's Baa3). Transmission provider will use the lower of the ratings if rated by multiple agencies.

vi. Positive Payment Record with the Transmission Provider (if previous or existing Transmission Customer).

The Transmission Customer will be determined to be creditworthy and granted unsecured credit if it complies with the criteria above and receives a credit score of four (4) or higher.

3.1.2 Public Power Entities

Public Power Entities are considered creditworthy and granted unsecured credit if the following exist:

(a) The Transmission Customer is not in default of its payment obligations under the Tariff and has not been in persistent default under the provisions of the Tariff; and

(b) The Transmission Customer is not on Western's subscribed rating service watch list; and

(c) The Transmission Customer is not in default of any payment obligation to the Transmission Provider; and

(d) The Transmission Customer is not in bankruptcy proceedings; and

(e) If the Transmission Customer or its guarantor is a federal, state or other governmental agency/entity and its financial obligations are backed by the full faith and credit of the United States, state or other governmental entity as applicable; and/or

(f) The Transmission Customer has the ability to raise rates to cover outstanding obligations.

3.2 Notification.

The Transmission Provider shall notify the Transmission Customer whether it has been found to be creditworthy or whether relevant financial assurance is required within five (5) business days after: (a) receiving the Transmission Customer's applicant with all required information; (b) receiving the Transmission Customer's written request for re-evaluation of creditworthiness with all required information; or (c) determining that a change in creditworthiness status or change in financial assurance is required as determined by the rotational review or other reviews performed pursuant to Section 4.1.

The Transmission Provider shall, upon the Transmission Customer's written request, provide a written explanation of the basis for the Transmission Provider's determination via e-mail within five (5) business days for any: (a) non-creditworthy determination; (b) changes in creditworthiness status; or (c) changes in requirements for financial assurances.

3.3 Establishing Credit Limits.

If an entity is determined to be creditworthy no credit limit will be established. For non-creditworthy entities, the credit limit will equal five (5) months of total estimated service charges as determined by the Transmission Provider from time to time. If at any time the Transmission Provider determines according to these creditworthiness standards that the Transmission Customer is not able to fully support its credit exposure based solely on its financial viability, the Transmission Provider may require collateral be provided.

3.4 Secured Credit.

3.4.1 Posting Collateral

If collateral is required by the Transmission Provider, the Transmission Customer will be asked to provide an acceptable form of collateral as defined in Section 3.4.3 below within 30 days of the Transmission Provider's request. No service to the Transmission Customer shall commence until this requirement is satisfied.

If service to the Transmission Customer already has commenced (existing Transmission Customer) and the Transmission Customer fails to provide the collateral as defined in Section 3.4.3 below and required by the Transmission Provider within five (5) business days of notification, the Transmission Customer will be deemed in default of its Service Agreement.

3.4.2 Required Amount of Collateral

Given the Transmission Provider's current billing practices and payment terms, the required amount of security will be based on the maximum total estimated service charge for five (5) months. This represents the potential value of services rendered prior to termination of service in the event of a default arising from a failure of nonpayment.

3.4.3 Acceptable Collateral

Acceptable collateral, totaling five (5) months of estimated service charges, includes:

(a) Prepayment for service; or

(b) An unconditional and irrevocable letter of credit as security to meet the Transmission Customer's responsibilities and obligations. If this form of collateral is used, it will comply with the requirements as stated in the Uniform Customs and Practice for Documentary Credits; or

(c) A cash deposit; or

(d) An irrevocable and unconditional corporate guaranty from an entity that satisfies the creditworthiness requirements.

4.0 RE-EVALUATION

4.1 Timeframe.

The Transmission Provider will review its credit evaluation for each Transmission Customer annually. Timely payments will be sufficient evidence for re-affirming the current credit arrangements, barring the reporting of any of the material changes outlined in Section 2.3. The Transmission Provider, at its sole discretion, may conduct additional reviews and updates of its credit evaluation in response to new facts or occurrences that may bear upon the Transmission Customer's creditworthiness due to material changes in financial condition of the Transmission Customer, or if the Transmission Customer fails to pay invoices

from the Transmission Provider on time. These updates will follow the procedures set forth in Section 3.1 of this Attachment.

4.2 Change in Limit/Collateral.

As a result of the Transmission Provider's creditworthiness review or in response to the Transmission Customer's request for re-evaluation or the Transmission Customer's notice of any material change in its financial condition, the Transmission Provider may adjust the Transmission Customer's credit limit and collateral requirements in accordance with Section 3.3 and Section 3.4, respectively. If required, additional collateral must be posted in accordance with Section 3.4.1.

The Transmission Customer may make reasonable requests for the Transmission Provider to re-evaluate the Transmission Customer's creditworthiness pursuant to the criteria detailed in Section 3.1.

5.0 RIGHT TO DRAW UPON FINANCIAL ASSURANCES UPON DEFAULT

The Transmission Provider shall have the right to liquidate, or draw upon, all or a portion of the Transmission Customer's form of financial assurance(s) in order to satisfy the Transmission Customer's total net obligation to the Transmission Provider upon a default. The Transmission Customer shall within five (5) business days replace any liquidated or drawn-upon financial assurances.

6.0 SUSPENSION OF SERVICE

6.1 Notification.

Notwithstanding any other provision of this Tariff, if the Transmission Customer fails to provide the entirety of required financial assurances when due under this Attachment, the Transmission Provider may suspend service to such Transmission Customer thirty (30) days after the Transmission Provider's notification to such Transmission Customer. The Transmission Provider will provide at least thirty (30) days written notice to the Commission before suspending service pursuant to this provision.

Any notices sent to the Transmission Customer and to the Commission pursuant to the Attachment may be sent concurrently.

6.2 Length of Suspension.

The suspension of service shall continue only for as long as the circumstances that entitle the Transmission Provider to suspend service continue.

6.3 Obligation to Pay.

A Transmission Customer is not obligated to pay for transmission service that is not provided as a result of a suspension of service.

WESTERN AREA POWER ADMINISTRATION
CREDIT APPLICATION

Complete all sections of this form and submit to:
Western Area Power Administration
ATTN:
P.O. Box 281213
Lakewood, CO 80228-8213

Date: _____

Applicant Name (Customer): _____
Address: _____
_____
_____

Type of Service Requested: _____

Expected Monthly Business: _____

DUNS Number: _____
Credit Rating (if applicable): _____

Credit Manager or Point of Contact: _____

Phone: _____ Fax: _____ Email: _____

Is your company a subsidiary or affiliate of another company? Yes___ No ____
If Yes, please provide information on the related company:

Company Name: _____
Address: _____
_____
DUNS Number: _____

Does your company plan to establish credit with a guarantee from the related company listed above? Yes ____ No ____

If Yes, all required information necessary for credit qualification is needed from the company guaranteeing credit.

Public Power Entities (not-for-profit):
Is your company a not-for-profit entity (governmental entity)? Yes ____ No ____

If your company is a not-for-profit entity, is it backed by the full faith and credit of a governmental entity (United States, state government or other government, as applicable)?
Yes ____ No ____ If Yes, state type of governmental entity and provide evidence.
_____

If your company is a not-for-profit entity, do you have the ability to raise rates to cover outstanding obligations? Yes ____ No ____

Provide any material issues/changes that could impact the viability of the Transmission Customer and/or the credit decision including, but not limited to, litigation, investigations, arbitrations, contingencies, liabilities and affiliate relationships which have occurred within the past year.

Non-Public Power Entities:
To enable the Transmission Provider to conduct the proper analysis required to determine creditworthiness, the information below must be submitted with the Credit Application.

1. Rating agency reports (if applicable).

2. The most recent two quarters of financial statements signed by the company controller or other authorized company officer and the most recent two years of audited financial statements. Financial statements should include, but not be limited to:

    a. Annual report;
    b. Balance sheet;
    c. Income statement;
    d. Statement of cash flows;
    e. Management's discussion and analysis;
    f. Report of independent auditor and accompanying notes for the Annual report, 10K, 10Q or 8K, as applicable.

3. Material issues that could impact the viability of the Transmission Customer and/or the credit decision including, but not limited to, litigation, investigations, arbitrations, contingencies, liabilities and affiliate relationships which have occurred since the last audited financial statements.

Note: The Transmission Provider may request additional information as it determines is necessary and appropriate for the credit evaluation.